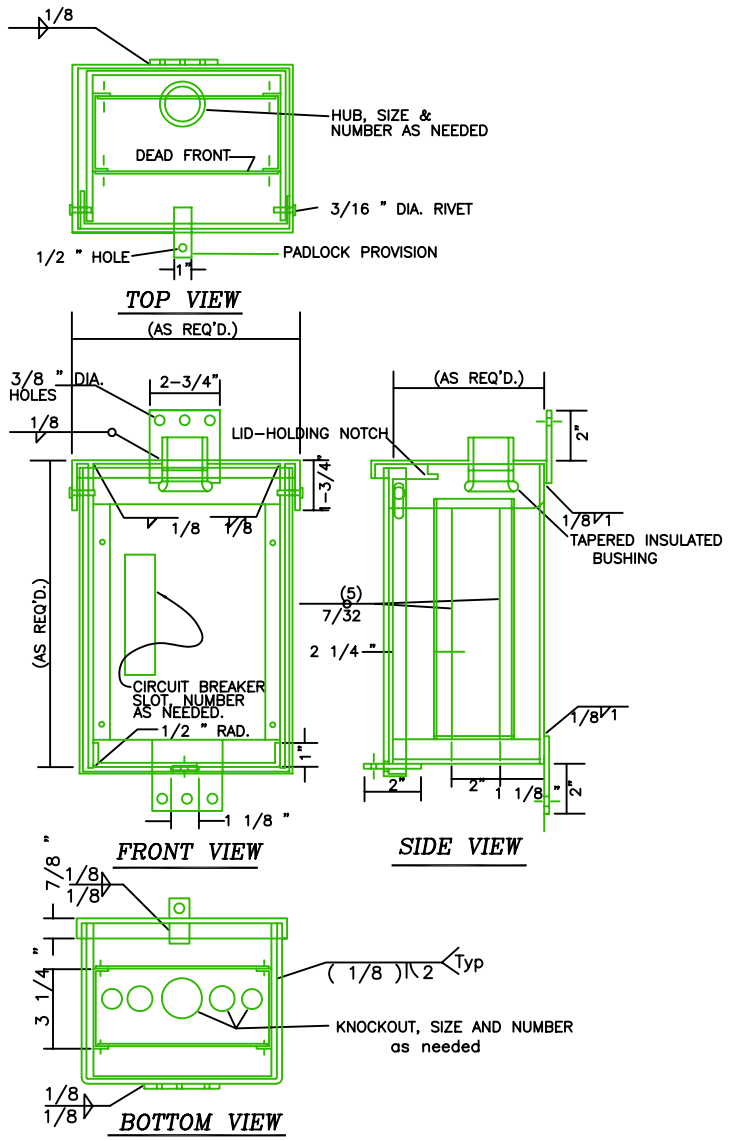

SERVICE CABINET

NOTE: CABINET SHALL BE CONSTRUCTED OF U.S. STANDARD NO. 10 GAUGE STEEL, HOT-DIPPED GALVANIZED AFTER FABRICATION. MINIMUM SIZE OF CABINET SHALL BE 6"X8"X12" FOR OVERHEAD OR UNDERGROUND UNMETERED SERVICE AND 6" x 12" x 12" FOR UNDERGROUND METERED SERVICE. INCREASE CABINET TO 8" x 16" x 20" WHEN ILLUMINATION IS INCLUDED. FOR UNDERGROUND SERVICE, ADD INTERNAL WIREWAY FOR CONDUCTORS TO METER.

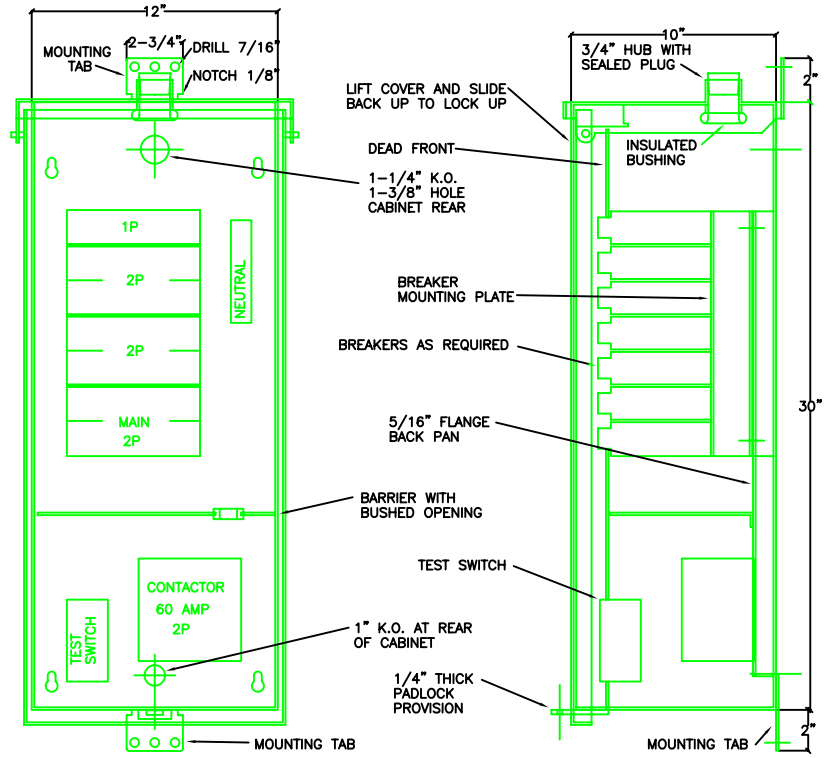

WEATHERPROOF CONTROL CABINET (STREET LIGHTS)

NOTE: CABINET OF 14 GA. , NE4 FINISH, TYPE 304, STAINLESS STEEL, SPOT WELDED CONSTRUCTION, U.L. LISTED AS SERVICE EQUIP., LABEL CUTOUT BOX RAINTIGHT.

NOTE: WEATHERPROOF COMPRESSION FITTING(S) SHALL BE INSTALLED IN BOTTOM OF CABINET. WHEN INSTALLING ON WOOD POLE USE TWO 3/8" DIA. x 4" LAG SCREWS WITH WASHERS

WEATHERPROOF TERMINAL CABINET

NOTE: USE SAME CONSTRUCTION AS FOR SERVICE CABINET

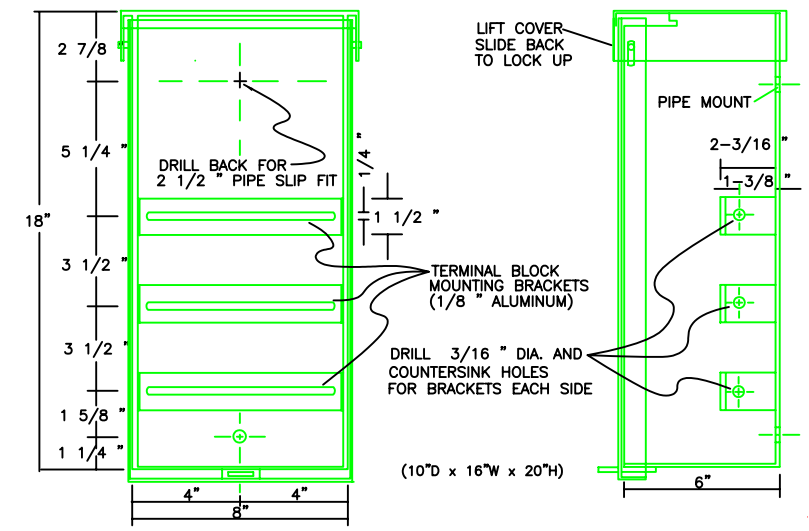

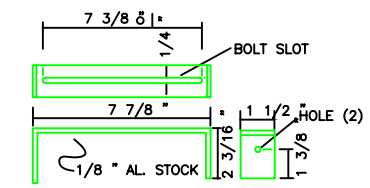

TERMINAL BLOCK MOUNTING BRACKET

NOTE: ALL TERMINAL BLOCKS SHALL BE INDIVIDUAL BLOCKS

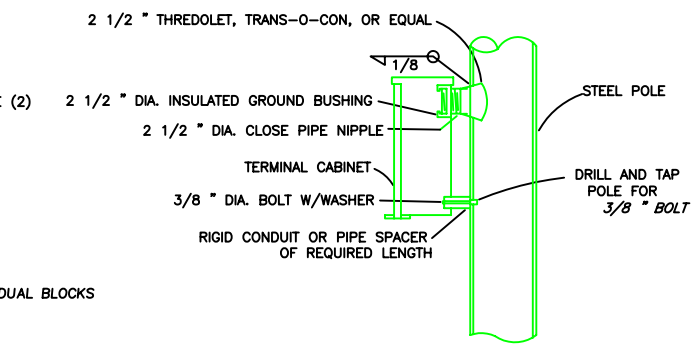

TERMINAL CABINET INSTALLATION DETAIL

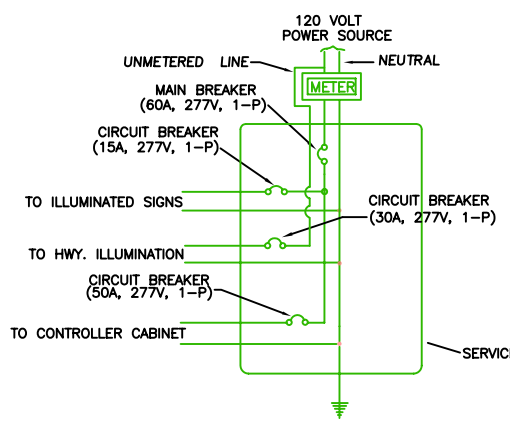

SERVICE CABINET WIRING WITH 120 VOLT UNMETERED ILLUMINATION

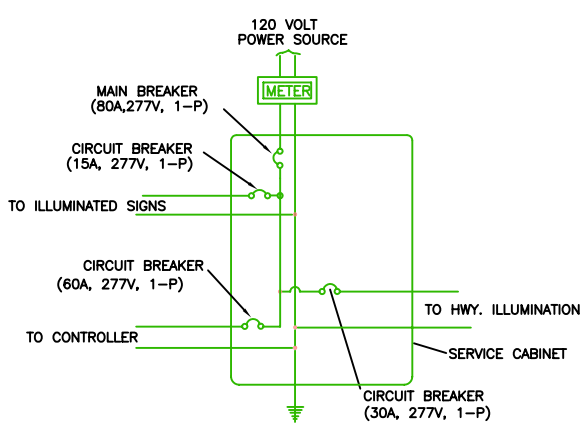

SERVICE CABINET WIRING WITH 120 VOLT ILLUMINATION

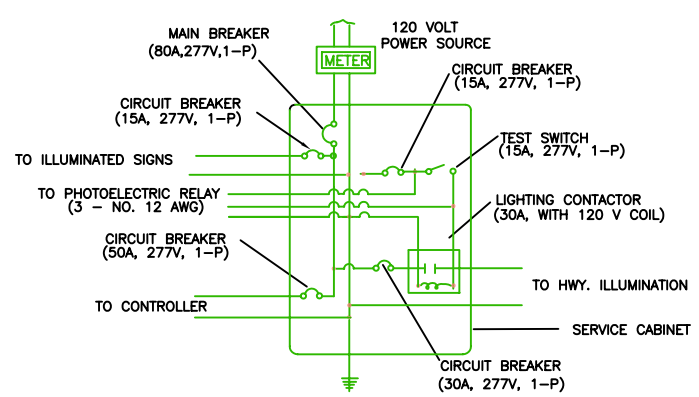

SERVICE CABINET WIRING WITH 120 VOLT CONTACTOR CONTROLLED ILLUMINATION

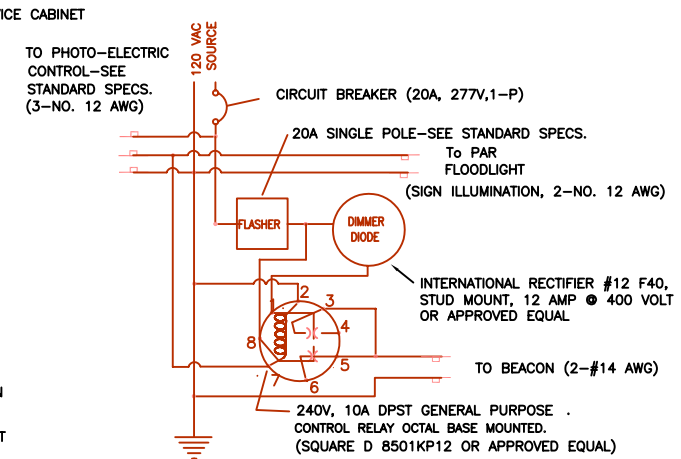

WIRING DIAGRAM FOR FLASHER CABINET

SHOWN: 12" FLASHING BEACON WITH PAR FLOODLIGHT
(FOR 8" BEACON DELETE DIMMER DIODE AND RELAY)
(FOR 12" INTERSECTION TRAFFIC CONTROL BEACON DELETE PAR FLOODLIGHT)

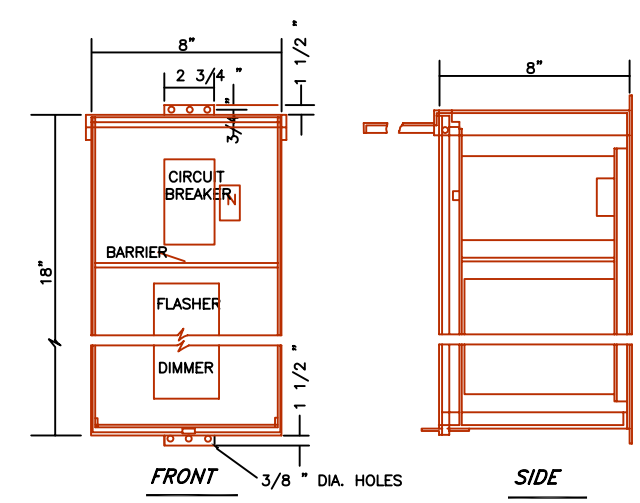

FLASHER CABINET

NOTE: DIMMER TO BE AS SPECIFIED IN STANDARD SPECIFICATIONS OR OR AS NOTED ON PLANS. USE PHOTO-ELECTRIC SWITCH OR TIME CLOCK AS CALLED FOR IN THE SPECIAL PROVISIONS. USE SAME CABINET CONSTRUCTION AS FOR SERVICE CABINET.

NOTE: DRAWING NOT TO SCALE

ALL EYEBOLTS, BOLTS, NUTS, AND WASHERS SHALL BE GALV. STEEL UNLESS NOTED OTHERWISE, ALL SET SCREWS SHALL BE MIN. DIA. 1/4" STAINLESS STEEL WITH SQUARE OR HEX HEADS. ALL SPANWIRE HANGERS AND PLUMBIZERS SHALL BE CAST BRONZE.

NO	REVISION	DATE	BY	APPR.
1	FORMERLY TS-106	6/91		
2	ST.L.T. CONTROL CABINET	7/92	J.B.	
3	STD. DWG. 5-11	4/94	D.B.	S.M.
4	STD. DWG. UPDATE	6/01	D.B.	B.B.
5	STD. DWG. UPDATE	6/02	D.B.	B.B.

DRAWN: LBRULE 6/90
DESIGNED:
CHECKED:
APPROVED:
FILENAME: TS05_11

CITY OF SPRINGFIELD
DEPT. OF PUBLIC WORKS
TRANSPORTATION DIVISION
225 FIFTH STREET
SPRINGFIELD, OR. 97477
(541) 726-3753

SPRINGFIELD TRANSPORTATION DIVISION

TERMINAL AND SERVICE CABINETS

STANDARD DRAWING

5-11