City of Springfield
Public Improvement Project

Invitation to Bid for:

P21149
Bike/Pedestrian Safety RRFB/Crossing Construction

The information provided is an abridged version of the complete Invitation to Bid and is provided for review and informational purposes only. To submit a bid for consideration, a complete set of bid documents is required.

A complete set of bid documents may be viewed or purchased at the address shown below:

City of Springfield
Development and Public Works Department
225 Fifth Street
SE Quad
Springfield, OR 97477

Contact: Terri White at 541-726-3628 or twhite@springfield-or.gov

City of Springfield
Community Development Division

SPECIFICATIONS
for

P21149

Bike/Pedestrian Safety RRFB/ Crossing Construction

MANDATORY PRE-BID MEETING		BID OPENING	
Date:	**March 14, 2019**	**Date:**	**April 3, 2019**
Time:	**9:30 a.m.**	**Time:**	**2:00 p.m.**
Location:	**City of Springfield - City Hall**	**Location:**	**City of Springfield - City Hall**
	Jesse Maine Room		**Jesse Maine Room**
	225 Fifth Street		**225 Fifth Street**
	Springfield, OR 97477		**Springfield, OR 97477**

The deadline for submission of questions regarding this Invitation to Bid prior to bid opening is March 26, 2019 at 10:00 a.m. as specified in Section 3.3 of the Instruction to Bidders.

Please Take Note: All information required must be submitted as directed.

For your Bid to be considered responsive by the City of Springfield you must include all documents included in the Invitation to Bid with your Bid. Additionally, any addendums or revisions must be acknowledged and submitted with your Bid. *The only exception to this is any plans or drawings, which are not required to be submitted as a part of your Bid.*

A complete description of submittal requirements can be found in the Instruction to Bidders document included in this request for bid under the heading; **5. Bid.**

CITY OF SPRINGFIELD, OREGON
Invitation to Bidders

Public Works Improvement Project

Sealed bids will be received at the office of the Finance Director, Nathan Bell at the City of Springfield Finance Department, 225 Fifth Street, Springfield, OR 97477, until, but no later than, 2:00 p.m. Local Time, the 3rd day of April, 2019 and opened immediately thereafter in the Jesse Maine Room, for the construction of the following public works improvement project in the City of Springfield:

Project No. P21149 Title: Bike/Pedestrian Safety RRFB/Crossing Construction

Description: Work consists of the installation of a raised pedestrian crossing for Riverbend Elementary, a Rectangular Rapid Flashing Beacon (RRFB) for Thurston and Agnes Stewart Middle Schools and the conversion of a pedestrian beacon at South 42nd Street at Mt Vernon into a RRFB pedestrian crossing.

Bid documents are available from the Department of Development and Public Works, City of Springfield, 225 Fifth Street, Springfield, OR 97477, for a non-refundable fee of $20.00 and are available for viewing at this location. Bid documents available online at http://www.springfield-or.gov/city/development-public-works/invitations-to-bid/ and those on file at plan centers are incomplete and cannot be used to submit bids.

A mandatory pre-bid meeting will be held on March 14, 2019 at 9:30 a.m. in the Jesse Maine meeting room.

All questions should be addressed to Terri White, Management Support Specialist, at twhite@springfield-or.gov. The deadline for submission of questions regarding this Invitation to Bid is March 26, 2019 at 10:00 a.m. Contact with any other City officials may be grounds for disqualification of bid.

Any bidder requiring special assistance or auxiliary aids during the bidding and award process, should contact Terri White at twhite@springfield-or.gov at least two (2) business days prior to the scheduled program, activity or meeting for hearing assistance or a sign language interpreter and at least five (5) business days prior to the event for all other meeting accommodations. Assistive listening systems are available for the hearing impaired in the Municipal Courtrooms and City Council Chambers. TTY users dial Oregon Relay Services at 711. Requests for documents in alternate formats should be submitted at least ten (10) calendar days prior to the date the materials are needed to allow time for the City to respond to the request. At the discretion of the City, submission deadlines may be extended to accommodate a request for alternate formats.

This project is subject to the state prevailing rates of wage under ORS 279C.800 to 279C.870. In accordance with ORS 279C.365, the City will not consider a bid unless it contains a statement by the bidder that they will comply with ORS 279C.838 through ORS 2179C.870. Each bid must contain a statement as to whether the bidder is a resident bidder, as defined in ORS 279A.120.

All Contractors performing work on this project shall have a current, valid certificate of licensure issued by the Construction Contractor's Board in accordance with ORS 701 and, if performing work described in ORS 671.520, a current, valid certificate of licensure from the State Landscape Contractor's Board in accordance with ORS 671.560, as applicable, in place at the time the quote is presented.

The City of Springfield may reject any or all bids not in compliance with all prescribed public bidding procedures and requirements, including the requirement to demonstrate the bidder's responsibility under ORS 279C.375, or waive minor irregularities not affecting substantial rights and may reject for good cause any or all bids upon a finding of the City of Springfield it is in the public interest to do so and accept such bids that in the opinion of the Springfield City Council are in the best interest of the City.

The City of Springfield encourages contractors, sub-contractors and vendors who are minority, woman-owned and emerging small businesses to participate in City projects.

Nathan Bell, Finance Director

Published: Daily Journal and Register Guard Publishing 03/08/19

Solicitation Number 2283

City of Springfield
225 Fifth Street
Springfield, OR 97477

Bid Submittal

Project No. P21149
Project Title: Bike/Pedestrian Safety RRFB/Crossing Construction

Bid Items:

Item No.	Description	Payment Specification Number	Approx. Quantity	Per	Unit Price	Total Price Extension
Project 1: Thurston Road and 64th St RRFB						
Construction Bid Items						
1	Mobilization	00210.90	1	LS		
2	Temporary Work Zone Traffic Control - Complete	00225.90(b)	1	LS		
3	Erosion Control	00280.90(a)	1	LS		
4	Horizontal Directional Drilling	00406.90(h)	90	FT		
5	10-inch ASTM D3034 SDR 35 PVC Storm Sewer Pipe	00445.91(b)	5	FT		
6	Curb Inlet – Complete in Place	00470.90(l)	1	EA		
7	Truncated Domes	00759.90(o)	38	SF		
8	Concrete Curb and Gutter Installation	00759.90(s)	80	FT		
9	Monolithic Curb, 4-inch Concrete Sidewalks and Ramps	00759.90(t)	570	SF		
10	24-inch White Bar - Crosswalk	00867.90(u)	126	FT		
11	24-inch White Bar – Stop Bar	00867.90(v)	12	FT		
12	"SCHOOL X-ING" Pavement Markings	00867.90(y)	2	EA		
13	Rectangular Rapid Flashing Beacon Installation – Complete in Place	00990.90(f)	1	LS		
			Project 1 Bid Item Total:			

Item No.	Description	Payment Specification Number	Approx. Quantity	Per	Unit Price	Total Price Extension
Project 2: S. 32nd Street Pedestrian Crossing						
Construction Bid Items						
14	Mobilization	00210.90	1	LS		
15	Temporary work Zone Traffic Control - Complete	00225.90(b)	1	LS		
16	Erosion Control	00280.90(a)	1	LS		
17	Horizontal Directional Drilling	00406.90(h)	190	FT		
18	5-inch Non-Reinforced Concrete Island	00759.90(b)	150	SF		
19	Truncated Domes	00759.90(o)	80	SF		
20	Monolithic Curb, 4-inch Concrete Sidewalks and Ramps	00759.90(t)	680	SF		
21	4-inch Concrete Walk, Median	00759.90(u)	80	SF		
22	24-inch White Bar - Crosswalk	00867.90(u)	60	FT		
23	24-inch White Bar - Stop Bar	00867.90(v)	24	FT		
24	4-inch Yellow Longitudinal	00867.90(w)	615	FT		
25	12-inch Yellow Transverse Median Bars	00867.90(x)	100	FT		
26	"SCHOOL X-ING" Pavement Markings	00867.90(y)	2	EA		

27	Sign Installation	00940.90(g)	2	EA		
28	Rectangular Rapid Flashing Beacon Installation – Complete in Place	00990.90(f)	1	LS		
29	School Zone Flasher Foundation and Relocation	00990.90(i)	1	LS		
				Project 2 Bid Item Total:		

Item No.	Description	Payment Specification Number	Approx. Quantity	Per	Unit Price	Total Price Extension
Project 3: 51st Street Raised Crossing						
Construction Bid Items						
30	Mobilization	00210.90	1	LS		
31	Temporary Work Zone Traffic Control – Complete in Place	00225.90(b)	1	LS		
32	Erosion Control	00280.90(a)	1	LS		
33	8-inch ASTM D3034 SDR 35 PVC Storm Sewer Pipe	00445.91(b)	40	FT		
34	Catch Basin – Complete in Place	00470.90(m)	2	EA		
35	Level 3, ½-inch Dense Asphalt Concrete Pavement (ACP)	00744.90	380	SF		
36	Truncated Domes	00759.90(o)	40	SF		
37	Concrete Curb and Gutter Installation	00759.90(s)	150	FT		
38	Monolithic Curb, 4-inch Concrete Sidewalks and Ramps	00759.90(t)	480	SF		
39	Reinforced Concrete Raised Pedestrian Crossing	00759.90(v)	1	SF		
40	24-inch White Bar - Crosswalk	00867.90(u)	60	FT		
41	Sign Installation	00940.90(g)	2	EA		
				Project 3 Bid Item Total:		

Item No.	Description	Payment Specification Number	Approx. Quantity	Per	Unit Price	Total Price Extension
Project 4: S. 42nd St. at Mt. Vernon Pedestrian Crossing						
Construction Bid Items						
42	S 42nd St at Mt. Vernon Rapid Rectangular Flashing Beacon Conversion	00990.90(j)	1	LS		
				Project 4 Bid Item Total:		
				Projects 1 + 2 + 3 + 4 Bid Item Total		

Terms, Declarations and Bid Submittal

Bidder's Understanding

Bidders shall determine for themselves all the conditions and circumstances affecting the projected cost of the proposed work by personal examination of the site, Contract documents, and by such other means they may deem to be necessary. It is understood and agreed that in the event the City has obtained information from data at hand regarding underground or other conditions or obstructions depicted in the Contract documents, there is no expressed or implied agreement that such conditions are fully or correctly shown, and the Bidder must take into consideration the possibility that conditions affecting the cost or quantity of work may differ from those indicated.

The Bidder is familiar with and is satisfied as to all federal, state and local laws and regulations that may affect cost, progress, and performance of the work.

Bid

The undersigned Bidder having examined the Specifications and Contractual Documents and having satisfied themselves as to all conditions to be encountered, hereby proposes to furnish all labor, material and equipment and perform all work necessary to complete Project P21149 in accordance with this Bid, the

Contract Plans, applicable Construction Specifications, the Special Provisions and all other Contractual Documents at the prices and on the terms herein contained.

The unit price Bids are submitted with the understanding that the quantities stated are approximate and are given only as the basis of calculation for comparison of Bids and determining that the unit prices are balanced and that final payment for all unit price items will be based on actual quantities.

It is understood that in the instance of a discrepancy between the unit price and the extension (total price extension) the unit price shall govern. The extension shall be determined by multiplying the unit price by the number of units (approximate quantity).

Bid Guarantee

As required by ORS 279C.365(5) each Bid shall be accompanied by a Bid Bond, cash, or a certified or cashier's check written upon a bank in good standing and in a form acceptable to the City, payable to the Finance Director of the City of Springfield, Oregon, in an amount equal to at least 10 percent of the total amount of the Bid. Bid Bonds shall be issued by a surety company registered to issue bonds in the State of Oregon, and utilizing a bond form acceptable to the City. The City will accept AIA Document A310-2010. The Bid Bond may not be altered.

Such Bid Guarantee shall be forfeited and become the property of the City in case the Bidder shall fail or neglect to furnish a satisfactory Performance and/or Payment Bond issued by a viable bond company acceptable to the City as required by ORS 279C.380 and to execute the Contract within ten (10) days (Saturday, Sunday, and holidays excepted) after receiving Contract from the City for execution. For information regarding Performance and Payment Bond requirements see City of Springfield Contract document, Section 5. City Bonding.

Bid Acceptance Period

This Bid will remain subject to acceptance for a period of 60 days after the bid opening, or for such longer period of time that the Bidder may agree to in writing upon request of the City.

Contract Award

Bids will be accepted and awarded in accordance with Oregon Public Contracting Law and Section 103.01 of the City's most recent version of the Standard Construction Specifications.

This Bid includes four separate projects as identified below. Individual Bids shall be submitted for each of the four projects. The projects are:

Project 1 – Thurston Rd. and 64th St. RRFB
Project 2 – S. 32nd St. Pedestrian Crossing
Project 3 – 51st St. Raised Crossing
Project 4 – S. 42nd at Mt Vernon Pedestrian Crossing

The lowest responsive Bidder shall be determined based on the Bidder who submits the lowest responsive total Bid for all four Projects combined. However, should the City determine it is not in the best interest of the City to award a contract for all four Projects the Bid shall be awarded to the Bidder who submits the lowest responsive combined total Bid for the projects the City determines will be awarded.

Prior to awarding the Contract, the City may, at its sole discretion, require Contractors and/or Subcontractors to demonstrate to the City's satisfaction that they have a complete and clear understanding of all requirements of the Prevailing Wage Rate Laws contained in ORS 279C.800 through 279C.870 and possess the expertise necessary for fulfilling their obligations pertaining to these requirements throughout the administration of the Contract. In determining competency, the City may consider Certified Payroll Reports submitted by the Contractor and/or Subcontractor for projects previously performed for the City, copies of Certified Payroll Reports submitted to other public entities, references from other public entities attesting to the Contractor's expertise, or an interview with the Contractor regarding their personnel resources and expertise or their ability to obtain the resources and expertise necessary to meet all contractual responsibilities in accordance with ORS 279C.375.

Time is of the Essence

Time is of the essence in the Contractor's performance of the Contract. Delays in the Contractor's performance of the work may inconvenience the public, interfere with business and commerce, and increase cost to the City. It is essential and in the public interest that the Contractor prosecute the work vigorously to Contract completion. The City does not waive any rights under the Contract by permitting the Contractor to continue to perform the Contract, or any part of it, after the Contract Time of Completion shown below, or as adjusted by Contract Change Order, has expired.

Liquidated Damages

The City of Springfield and the Contractor agree that; (a) the amounts so fixed are reasonable forecasts of just compensation for the harm that is caused by the breach; (b) the harm that is caused by the breach is one that is incapable of or very difficult of accurate estimation; and, (c) the amount so fixed is not fixed as a penalty to coerce performance of the Contract but is rather intended to be a genuine pre-estimation of injury to the City of Springfield in lieu of performance within the contract time by the Contractor.

a. Delay

It is agreed by the City of Springfield and by the Contractor that the need exists for a damage provision in the event the Contractor fails to complete the work within the Contract time specified, or any extension thereof, by the City of Springfield. The City of Springfield and the Contractor further agree that the Contractor shall be liable to the City of Springfield for fixed, agreed and liquidated damages for each and every calendar day of delay in the amount of $500.00 per day in accordance with Subsection 108.07 of the Standard Construction Specifications.

b. Failure to Report Spills

The Contractor also agrees to liquidated damages in the amount of $500.00 per incident for failure to report sewage spills plus an amount sufficient to reimburse the City for any civil and administrative penalties paid by the City as a result of the contractor's failure to report. Failure to report sewage spills may subject the City to (1) civil penalties of up to $32,500.00 per day of violation pursuant to Section 309(d) of the Clean Water Act, 33 U.S.C. § 1319(d); (2) administrative penalties of up to $11,000.00 per day for each violation, pursuant to Section 309(g) of the Clean Water Act, 33 U.S.C. § 1319(g); or (3) civil action in federal court for injunctive relief pursuant to Section 309(b) of the Clean Water Act, 33 U.S.C. § 1319(b).

Contract Time of Completion

Work under this Bid will not be allowed to begin until the 2019 Springfield School District school year has concluded and all students have been released for the summer. At this time we estimate the earliest starting date to be June 18, 2019. The Contractor shall not begin work until a written Notice to Proceed has been received and a Pre-construction Meeting has been held, and no sooner than the approved starting date shown in the Notice to Proceed. The Contractor shall complete the work under this Bid no later than August 23, 2019.

The Contractor shall apply for any extensions of time as specified in Subsection 108.06 of the Standard Construction Specifications.

Certifications

The undersigned hereby certifies that:

1.) If awarded the Contract, that they shall fully comply with all provisions regarding the prevailing wage rates as required by ORS 279C.800 to 279C.870 and/or 40 U.S.C. 2762 as applicable.

2.) The Contractor, Subcontractor, suppliers of materials or services, and others engaged by the Contractors, shall comply at all times with and observe all such laws, ordinances, regulations, orders, and decrees; and shall hold harmless and indemnify the City of Springfield and its representatives against any claim or liability arising from or based on the violation of any such law, ordinance, regulation, order, or decree.

3.) The Contractor, Subcontractor or other person doing, or contracting to do, or contracting for the whole or any part of the work on the Contract shall comply with all applicable requirements of Federal and State civil rights and rehabilitation statutes, rules and regulations.

4.) In conformance with OAR 137-049-0440(3) and ORS 279A.110(4) the Contractor has not, and will not, discriminate against a Subcontractor in the awarding of a subcontract because the Subcontractor is a minority, women or emerging small business enterprise certified under ORS 200.055 or a business enterprise that is owned or controlled by or that employs a disabled veteran, as defined in ORS 408.225.

5.) In accordance with ORS 279C.505, the Contractor will;

a.) Make payment promptly, as due, to all persons supplying to the Contractor labor or material for the performance of the work provided for in the Contract.

b.) Promptly pay all contributions or amounts due the State Industrial Accident Fund, or private carrier of accident insurance, from such Contractor or Subcontractor incurred in the performance of the Contract. If a private carrier is used, the Contractor shall notify the Engineer as to the carrier's name and address before commencement of work.

c.) Not permit any lien or claim to be filed or prosecuted against the state or a county, school district, municipality, municipal corporation or subdivision thereof, on account of any labor or material furnished.

d.) Pay to the Department of Revenue all sums withheld from employees under ORS 316.167.

e.) Have an employee drug testing program in place at the time of signing the contract and will maintain such drug testing program in place over the life of the Contract. Upon request, the Contractor shall furnish a copy of the employee drug testing program to the City.

6.) In accordance with ORS 279C.510, If demolition is involved, the Contractor shall salvage or recycle construction and demolition debris, if feasible and cost-effective as required by ORS 279C.510(1). If lawn or landscaping maintenance is involved, the Contractor shall compost or mulch yard waste in an approved site, if feasible and cost-effective as required by ORS 279C.510(2).

7.) In accordance with ORS 279C.520, no person will be employed by the Contractor or Subcontractor for more than 10 hours in any one day, or 40 hours in any one week except in cases of necessity, emergency, or where the public policy absolutely requires it, and in such cases the person so employed shall be paid at least time and one-half the regular rate of pay for all times worked in excess of eight hours a day or 40 hours in any one week when the work week is five consecutive days, Monday through Friday; or in excess of 10 hours a day or 40 hours in any one week when the work week is four consecutive days, Monday through Friday; and for all work performed on a Saturday, Sunday and on any legal holiday specified in ORS 279C.540.

8.) In compliance with ORS 279C.525, the Contractor has received and reviewed Federal, State and local agencies that may have enacted ordinances, rules or regulations dealing with the prevention of environmental pollution and the preservation of natural resources that may affect the performance of this Contract as identified under Section 13 of the Contract. Accordingly, if the Contractor is delayed or must undertake additional work by reason of ordinances, rules, or regulations relating to the prevention of environmental pollution and the protection of natural resources subsequent to the date of submission or the successful quote, the City may:

a.) Terminate the Contract,

b.) Complete the work itself,

c.) Use non-owner forces already under contract with the City of Springfield,

d.) Solicit bids for a new contractor to provide the necessary services under competitive bid requirements 279C,

e.) Issue the Contractor a change-order setting forth additional work that must be undertaken.

9.) In accordance with ORS 279C.530, the Contractor will;

a.) Promptly, as due, make payments to any person, co-partnership, association or corporation, furnishing medical, surgical, and hospital care or other needed care and attention, incidental to sickness or injury, to the employees of such Contractor, of all sums which the Contractor agrees to pay for such services and all monies and sums which the Contractor:

1. May or shall have deducted from the wages of his employees for such services pursuant to the terms of Oregon Revised Statutes and any contract entered in pursuant thereto; or

2. Collected or deducted from the wages of his employees pursuant to any law, contract, or agreement for the purpose of providing or paying for such service; and

3. All employers working under the Contract are either employers that will comply with ORS 656.017 or employers that are exempt under ORS 656.126. The Contractor shall ensure that each of its Subcontractors complies with these requirements.

10.) No Contractor, Subcontractor or any firm, corporation, partnership or association in which the Contractor or Subcontractor has a financial interest who appears on the *List of Contractors Ineligible to Receive Public Works Contracts*, as established by the Bureau of Labor and Industries, will perform work under this Contract, as specified in ORS 279C.860.

11.) No Contractor, Subcontractor or any firm, corporation, partnership or association in which the Contractor or Subcontractor has a financial interest who appears on the Construction Contractor's Board *Not Qualified to Hold Public Contracts* list, will perform work under this Contract, as specified in ORS 701.227(4).

12.) The Contractor performing work on this project shall have a current, valid certificate of licensure issued by the Construction Contractor's Board in accordance with ORS 701 and, if performing work described in ORS 671.520, a current, valid certificate of licensure from the State Landscape Contractor's Board in accordance with ORS 671.560 as applicable in place at the time the quote is presented.

13.) Prior to performing any work under the Contract all Subcontractors shall have a current, valid certificate of licensure issued by the Construction Contractor's Board in accordance with ORS 701 and, if performing work described in ORS 671.520, a current, valid certificate of licensure from the State Landscape Contractor's Board in accordance with ORS 671.520 as applicable.

14.) In compliance with ORS 279C.836, the Contractor shall confirm that all Subcontractors have a valid public works bond on file with the Construction Contractors Board prior to allowing them to perform any work under the Contract.

15.) If the Contract specifies that the project includes Asbestos Abatement, the Contractor and all Subcontractors performing work on the project shall be licensed in accordance with ORS 467A.720 prior to performing any work on the project. Certification of compliance shall be presented to the City upon request.

16.) The Contractor shall function as an independent contractor for the purposes of this Contract and shall not be considered an employee of the City of Springfield for any purpose. The Contractor shall assume sole responsibility for any debts or liabilities that may be incurred by the Contractor in fulfilling the terms of this Contract and shall be solely responsible for the payment of all federal, state, and local taxes which may accrue because of this Contract.

17.) The Contractor and all Subcontractors shall comply with all applicable provisions of the Americans With Disabilities Act of 1990, 42 USC Section 12101 et seq. and Section 504 of the Rehabilitation Act of 1973.

Bid Addenda

All Addenda issued are considered to be part of the specifications of the Invitation to Bid and, as such, are as incorporated into the Contract as specified in Section 104.02 of the Standard Construction Specifications.

By signing below, I acknowledge the receipt of the following Addenda documents and certify that the specifications contained in each have been considered and incorporated into the Bid as presented. All Addenda must be included with the Bid submitted.

Addenda Number	Addenda Date

Declarations

As required by ORS 305.385(6), under penalty of perjury, by signing below the Contractor represents that, to the best of their knowledge, neither they nor any applicable Subcontractors performing work under the Contract are in violation of any tax laws as described in ORS 305.380(4) and have complied with the tax laws of this state or a political subdivision thereof including, but not limited to, ORS 305.620 and ORS Chapters 316, 317 and 318. The Contractor shall also covenant to continue to comply with the tax laws of this state or a political subdivision thereof during the term of the Contract and that Contractor's failure to comply with such laws prior to execution of the Contract or during the term thereof is a default for which the City may terminate the Contract and seek damages and other relief available under the terms of the Contract or under applicable law.

The undersigned Bidder declares that the only persons or parties interested in the Bid are those named herein, that this Bid is, in all respects, fair and without fraud, that it is made without collusion with any official of the City, and that the Bid is made without any connection or collusion with any person submitting another Bid on this project.

I have read, fully understand, and agree that as Bidder I, and all Subcontractors, will comply with all of the terms and conditions of the contract for which this Bid is presented. By signing below I attest that I am an officer or a duly authorized representative of the business listed below and that I possess the legal authority to submit this Bid for consideration.

If the Bid is submitted by a joint venture and is in the name of the joint venture, by signing below I certify that all parties have examined this Bid, including all requirements and the Contract terms and conditions and, if successful, the joint venture shall execute a Contract which incorporates the stated requirements, terms and conditions.

Bidder's Signature _____

Bidder's Name *(Please Print)* _____

Title _____

Business Name _____

Business Address _____

City _____ State _____ Zip _____

Phone Number _____ Cell Phone _____

Date _____ E-mail Address _____

CITY OF SPRINGFIELD CONTRACT

State and Local Funding Sources

Project No. P21149

Project Title: Bike/Pedestrian Safety RRFB/ Crossing Construction

Description: Work consists of the installation of a raised pedestrian crossing for Riverbend Elementary, a Rectangular Rapid Flashing Beacon (RRFB) for Thurston and Agnes Stewart Middle Schools and the conversion of a pedestrian beacon at South 42nd Street at Mt Vernon into a RRFB pedestrian crossing.

THIS CONTRACT, made and entered into this _____ day of _____, 2019, between the City of Springfield, under and by virtue of the Charter, Laws, and Ordinances of the said City of Springfield, and the laws of the State of Oregon, and _____ hereinafter called the Contractor.

WITNESSETH:

That in consideration of the payments, covenants and contracts hereinafter mentioned, attached and made a part of this Contract, to be made and performed by the parties hereto, the parties hereto covenant and agree as follows:

1. GENERAL REQUIREMENTS

This Contract, signed by both parties, supersedes all prior and contemporaneous oral or written communications between the parties, their agents and representatives. This Contract, as signed by both parties, shall be composed of each and every one of the following listed parts and all approved revisions thereto; and shall be interpreted so as to give the effect to the purpose of the Contract. In the event of a conflict or ambiguity, the precedence provision of Section 104.03 shall apply.

1. Change Orders
2. Addenda to the Special Provisions
3. Special Provisions
4. Addenda to General Conditions and Standard Specifications
5. General Conditions and Specifications
6. Contract Plans
7. Standard Drawings
8. Instruction to Bidders
9. Bid Proposal

The Contractor shall furnish all materials, tools, equipment, labor, and do all work necessary and incidental to completing this Contract, in accordance with the requirements of the documents pertinent thereto, including those listed in Section 104.02 of the Standard Specifications in their entirety, which are also set forth hereinabove.

The Contractor shall so complete this Contract and present same to the City on or before the time specified in the Bid Proposal. The total probable estimated cost of the Contract as stated on the Bid is _____. ($_____).
It is agreed that the actual final total cost per item and total Contract may vary in accordance with the provisions of the Bid, Section 102.10 of the Standard Specifications, and Article 4 of the Instructions to Bidders.

SAMPLE

2. CONTRACT COMPLETION

The City of Springfield hereby promises and agrees, with the Contractor, to contract with and does hereby contract with the Contractor to complete this Contract in accordance with the above requirements, including any change orders, provided that a reasonable and equitable change order can be agreed upon between the Contractor and the City. In event of failure to so agree on any required change order, the City may then proceed with such work in any manner the City may elect. Such a situation and action by the City shall in no way relieve either the Contractor or the City of their respective obligations and responsibilities regarding all other requirements of this Contract.

3. FULL PERFORMANCE BY CONTRACTOR

The Contractor, for itself, and for its heirs, executors, administrators, successors, and assigns, does hereby agree to the full performance of all the covenants herein contained upon the part of the Contractor.

4. NO LIABILITY TO CITY

It is further provided that no liability shall attach to the City by reason of entering into this Contract, except as expressly provided herein.

5. CITY BONDING

The Contractor shall file with the City of Springfield at the time of execution of this Contract both a Performance Bond and Payment Bond issued by a surety company registered to issue bonds in the State of Oregon, and utilizing bond forms acceptable to the City. The City will accept AIA Document A312-2010 Performance and Payment Bonds (sample forms enclosed). The Bonds may not be altered.

The bonds shall be in the amounts of one hundred percent (100%) of this Contract. All bonding shall remain in force for one (1) year after the date of City Council acceptance of the work, to cover all guarantees against defective workmanship and materials and execution of and in accordance with this Contract, and to guarantee payment to all persons supplying labor and materials for the construction of the work. Failure to maintain the proper bonding shall be grounds for immediate termination of the Contract.

6. HOLD HARMLESS AND INDEMNIFICATION

The Contractor shall defend, indemnify and hold harmless the City from and against all liability or loss and against all claims or actions based upon or arising out of damage or injury to persons or property caused by or sustained in connection with performance of this Contract by the Contractor except, pursuant to ORS 30.140, for losses, claims, or actions resulting from the sole negligence of the City.

The Contractor shall assume all responsibilities for the work, and bear all losses and damages directly or indirectly resulting to the Contractor, the City, or to others on account of the character or performance of the work, unforeseen difficulties, accidents, or any other causes whatsoever. The Contractor shall assume defense of, indemnify and save harmless the City, its officials, agents, and employees from all claims, liability, loss, damage, and injury of every kind, nature and description, directly or indirectly resulting from activities in the performance of the Contract, the ownership, maintenance or use of motor vehicles in connection therewith, or the acts, omissions, operations, or conduct of the Contractor or any Subcontractor under the Contract or any way arising out of the Contract, irrespective of whether an act, omission or conduct of the City connected with the Contract is a condition or contributory cause of the claim, liability loss, damage or injury and irrespective of whether act, omission, or conduct of the Contractor or Subcontractor is merely a condition rather than a cause of a claim, liability, loss damage or injury. The Contractor shall not be liable for, nor be required to defend or indemnify, the City relative to claims for damage or damages resulting solely from acts or omissions of the City, its officials, agents, or employees. The absence of or inadequacy of the liability insurance required in section 7 shall not negate Contractor's obligations in this paragraph.

7. INSURANCE

All insurance shall carry a rating of A- or better with A. M. Best and must be approved by the City as to terms, conditions and form prior to beginning work. Certificates of insurance evidencing all policies and endorsements required by this Contract shall be delivered to the Owner prior to the commencement of any work. The Owner has the right to reject any certificate or endorsement for unacceptable coverage and/or

SAMPLE

companies.

A. Liability and Property Damage

The Contractor shall maintain in force for the duration of the Contract, to include the warranty period, a Commercial General Liability insurance policy written on an occurrence basis with limits not less than $2,000,000 per occurrence and $3,000,000 in the aggregate. The policy will be endorsed with Additional Insured, Per Project Aggregate, Products and Completed Operations and Primary and Noncontributory endorsements. The City, its employees, officials and agents will be named as Additional Insured's where operations are being conducted related to this Contract on the Commercial General policy as respects to work or services performed under this Contract to the extent that the death or bodily injury to persons or damage to property arises out of the fault of the Contractor or the fault of the Contractor's agents, representatives or Subcontractors. The following statement will appear on the face of the certificate; "The City, its employees, officials and agents are all named as additional insured while acting in their capacity as such." The City's Additional Insured status for Products and Completed Operations hazards shall extend for at least one year beyond formal Council acceptance of the project. This insurance shall be primary and shall be paid and applied first in its entirety prior to any application of insurance the CITY may carry on its own. A 30-day notice of cancellation or material change in coverage clause shall be included.

The Contractor shall maintain in force for the duration of the Contract, to include the warranty period, an Automobile Liability insurance policy (owned, non-owned, and hired) with limits not less than $1,000,000 per occurrence. The policy will be endorsed with Additional Insured and Primary and Noncontributory endorsements. The City, its employees, officials and agents will be named as Additional Insured's where operations are being conducted related to this Contract on the Automobile Liability policy as respects to work or services performed under this Contract to the extent that the death or bodily injury to persons or damage to property arises out of the fault of the Contractor or the fault of the Contractor's agents, representatives or Subcontractors. The following statement will appear on the face of the certificate; "The City, its employees, officials and agents are all named as additional insured while acting in their capacity as such." This insurance shall be primary and shall be paid and applied first in its entirety prior to any application of insurance the CITY may carry on its own. A 30-day notice of cancellation or material change in coverage clause shall be included.

B. Workers' Compensation

The Contractor shall provide and maintain Workers' Compensation coverage with limits no less than $500,000 for it employees, officers, agents, or partners, as required by applicable Workers' Compensation laws. If the Contractor is exempt from this coverage a written statement, signed by the Contractor, explaining the reason for the exemption will be provided to the City prior to commencement of any work.

C. Course of Construction and/or Installation Floater

In the event Course of Construction/Installation Floater insurance is required by the City due to unique project specifications or the Contractor requests advance payment by the City for the purchase of materials pursuant to Section 109.07 of the City of Springfield Standard Construction Specifications, the Contractor shall provide Course of Construction/Installation Floater insurance in an amount equal to the value of the advance payment requested. The policy shall provide coverage for all risks and shall be approved by the City as to terms, conditions and form covering the replacement cost of the applicable materials prior to the release of payment. The policy shall name the City of Springfield as Loss Payee. The coverage shall be maintained in full force for the duration of this Contract. The City, at its option, may elect to obtain additional coverage.

D. Asbestos Abatement (only applicable to Asbestos Specific Contracts)

If applicable to this Contract, the Contractor shall maintain in full force a Commercial General Liability policy approved by the City as to terms, conditions and form that is Asbestos Specific with a minimum limit of $2,000,000 per occurrence and $3,000,000 in the aggregate written on a form that meets the following criteria:

a. A full occurrence form, or

b. A limited occurrence form with at least a three-year (3) tail, or
c. A claims made form with a three-year (3) tail.

E. Pollution Liability Coverage (only applicable to Pollution Specific Contracts)

If applicable to this Contract, the Contractor shall maintain in full force a Commercial General Liability policy approved by the City as to terms, conditions and form that is Pollution Specific with a minimum limit of $2,000,000 per occurrence and $3,000,000 in the aggregate written on a form that meets the following criteria:

a. A full occurrence form, or
b. A limited occurrence form with at least a three-year (3) tail, or
c. A claims made form with a three-year (3) tail.

F. Professional Liability Coverage (only applicable to Contract if specified)

If Professional Liability insurance is required, the City must approve the terms, conditions and limits prior to commencement of any work.

G. Additional Policies and Special Coverages

Refer to the Special Provisions section of this Contract for additional coverages that may be required.

H. Railroad Protective Liability Coverage

If work being performed under this Contract is near railroad tracks or a railroad right of way and the Railroad requires special insurance (for example: Railroad Protective Liability Coverage) Contractor will be responsible for meeting the Railroad insurance requirements before any work commences. Any insurance required to be purchased by the Railroad is in addition to the insurance required by the City.

I. Subcontractors

The Contractor shall require all Subcontractors to provide and maintain General Liability, Auto Liability and Workers' Compensation insurance and, as applicable, Professional, Asbestos and Pollution Liability with coverage's equivalent to those required of the General Contractor in this Contract. The Contractor shall require certificates of insurance from all Subcontractors as evidence of coverage. Upon request, the Contractor shall provide certificates of insurance for all Subcontractors performing work on the project to the City.

J. Additional Insured Endorsement

All certificates of insurance, with the exception of Professional Liability and Railroad Protective Liability, must include an endorsement which lists the City of Springfield as a named additional insured. The following statement will appear on the face of the certificate; "The City, its employees, officials and agents are all named as additional insured while acting in their capacity as such."

K. Evidence of Coverage and Notice of Cancellation or Material Change in Coverage

Evidence of the required coverages issued by a company satisfactory of the City shall be provided to the City by way of a certificate of insurance before any work or services commence. A 30-day notice of cancellation or material change in coverage clause shall be included.

If the approved insurance company will not provide this 30 day notice, it shall be the responsibility of the Contractor to provide written notice to the City within two (2) days of the Contractor becoming aware that their coverage has been cancelled or materially changed. The Contractor shall e-mail notification directly to Nathan Bell, Finance Director at nbell@springfield-or.gov with a copy to Terri White at twhite@springfield-or.gov. Regardless of the circumstances causing the Contractor's insurance coverage to cease or be modified, it is the Contractor's responsibility to notify the City as described above.

Failure to maintain the proper insurance or provide notice of cancellation or material change shall, at the City's option, be grounds for immediate termination of this Contract. _____

(Contractor initials)

SAMPLE

L. Equipment and Material

The Contractor shall be responsible for any loss, damage, or destruction of its own property, equipment, and materials used in conjunction with the work.

8. INDIAN GRAVES AND PROTECTED OBJECTS

The Contractor warrants that it will observe all applicable requirements of ORS 97.740 et. seq. regarding Indian Graves and Protected Objects (ORS 358.905-.961 and ORS 390.235-.240).

In the event the Contractor or any of its Subcontractors or agents discover, become aware of, or find any Native Indian Artifacts, sites, human remains, or funerary objects on the real property on which the Contractor is fulfilling this Contract, the Contractor will immediately safeguard the artifacts and site, halt construction activities at the area of the find, and immediately notify City. Such artifacts may include but not be limited to charred and cracked rocks or charcoal layers of soil indicating a hearth or oven, stone chips of obsidian and other colored rocks, stone bowls, arrow and spear points, stone tools, and bone fragments. All artifacts found shall be turned over to the City for appropriate disposition in accordance with applicable law. Upon receipt of notification the City will retain a consultant archeologist to conduct an initial assessment of significance of the find. The Contractor and City will work together to comply with all applicable requirements of ORS 97.740 et. seq. in a manner which has least impact upon the construction schedule. If compliance requires some adjustment of the construction schedule, the Contractor and the City shall make reasonable adjustments.

9. TIME IS OF THE ESSENCE

Time is of the essence in the Contractor's performance of the Contract. Delays in the Contractor's performance of the work may inconvenience the public, interfere with business and commerce, and increase cost to the City. It is essential and in the public interest that the Contractor prosecute the work vigorously to Contract completion. The City does not waive any rights under the Contract by permitting the Contractor to continue to perform the Contract, or any part of it, after the Contract Time of Completion specified, or as adjusted by Contract Change Order, has expired.

A. Liquidated Damages

The City of Springfield and the Contractor agree that; (a) time is of the essence; (b) the amounts so fixed are reasonable forecasts of just compensation for the harm that is caused by the breach; (c) the harm that is caused by the breach is one that is incapable of or very difficult of accurate estimation; and, (d) the amount so fixed is not fixed as a penalty to coerce performance of the Contract but is rather intended to be a genuine pre-estimation of injury to the City of Springfield in lieu of performance within the Contract time by the Contractor or the Contractor's failure to report sewage spills. Therefore, it is agreed as follows:

1. Delay

It is agreed by the City of Springfield and by the Contractor that the need exists for a damage provision in the event the Contractor fails to complete the work within the Contract time specified, or any extension thereof, by the City of Springfield. The City of Springfield and the Contractor further agree that the Contractor shall be liable to the City of Springfield for fixed, agreed and liquidated damages for each and every calendar day of delay in the amount of $500.00 per day in accordance with Subsection 108.07 of the Standard Construction Specifications.

2. Failure to Report Sewage Spills

The Contractor also agrees to liquidated damages in the amount of $500.00 per incident for failure to report sewage spills plus an amount sufficient to reimburse the City for any civil and administrative penalties paid by the City as a result of the Contractor's failure to report. Failure to report sewage spills may subject the City to (1) civil penalties of up to $32,500.00 per day of violation pursuant to Section 309(d) of the Clean Water Act, 33 U.S.C. § 1319(d); (2) administrative penalties of up to $11,000.00 per day for each violation, pursuant to Section 309(g) of the Clean Water Act, 33 U.S.C. § 1319(g); or (3) civil action in federal court for injunctive relief pursuant to Section 309(b) of the Clean Water Act, 33 U.S.C. § 1319(b).

SAMPLE

10. PREVAILING WAGE RATE PROVISIONS

Oregon law requires that if prevailing wage rate law applies a public agency must pay the prevailing wage rate for all contracts over $50,000. For contracts over $50,000, Contractor will comply with the applicable requirements of ORS 279C.800 through 279C.870 including the provisions in this Section 10.

A. Notice

In the event that total cost of the contract as specified in Section 1 "General Requirements" does not initially exceed $50,000 but during the scope of work increases through amendments, change orders, additions, supplements, other contracts, or through any other reason or process, formal or informal, planned or unplanned, to an amount greater than $50,000 then the entire contract is covered under the requirements of the prevailing wage rate law as described below.

B. Prevailing Wage Rate

Each worker in each trade or occupation employed in the performance of this Contract either by the Contractor, Subcontractor or other person doing or contracting to do or contracting for the whole or any part of the work on the Contract, must be paid not less than the applicable prevailing wage rate. Prevailing wage rate payments include fringe benefits, for each trade or occupation in the locality where such labor or work is performed, as determined by the commissioner, in which the workers are employed. The existing rate of wage is the rate, in effect at the time the initial specifications were first advertised for bid solicitations as determined by the Commissioner of the Bureau of Labor and Industries under ORS279C.815. Information regarding the Prevailing Wage Rate that is applicable to this Contract is contained in the document titled "Prevailing Wage Information" which is included within the Invitation to Bid documents and is incorporated herein by reference.

C. Submission of Certified Payrolls

As specified in ORS 279C.845, the Contractor or the Contractor's surety and every Subcontractor or the Subcontractor's surety shall file certified statements with the public agency in writing, on a form prescribed by the Commissioner of the Bureau of Labor and Industries, certifying the hourly rate of wage paid each worker whom the Contractor or the Subcontractor has employed upon the public works, and further certifying that no worker employed upon the public works has been paid less than the prevailing rate of wage or less than the minimum hourly rate of wage specified in the Contract. The certificate and certified statement shall be verified by the oath of the Contractor or the Contractor's surety or Subcontractor or the Subcontractor's surety that the Contractor or Subcontractor has read the certified statement and certificate and knows the contents thereof and that the same is true to the Contractor or Subcontractor's knowledge. Certified statements (also referred to as certified payroll reports) shall be submitted to the City no later than the 5th business day of the following month for which the certified statement and certificate are being presented, regardless of whether any actual work is performed on the project or not. This information must be submitted to the City and also retained by the Contractor and Subcontractor(s) for three years.

Contracting agencies and general contractors are required to withhold 25% of amounts to Contractors if certified payrolls are not filed by the Contractor as required for work performed on projects subject to the prevailing wage rate law. Failure of Contractors to comply with the certified payroll filing requirements of the law, therefore, will result in a negative fiscal impact to those Contractors of up to 25% of their amount owed.

Each worker employed in the performance of this contract, either by the Contractor or Subcontractor or other person doing or contracting to do or contracting for the whole or any part of the work of the contract, must be paid not less than the specified minimum hourly rate of wage in accordance with ORS 279C.838 and 279C.840.

11. BONDING TO BE FILED WITH THE CONSTRUCTION CONTRACTORS BOARD

As specified in ORS 279C.836, the Contractor shall file a public works bond with a corporate surety in the amount of $30,000.00 with the Construction Contractors Board before starting work on a Contract for a

SAMPLE

public works project subject to the provisions of the Prevailing Wage Rate Law (ORS 279C.800 to 279C.870) with a total Contract price greater than $100,000. In addition, as specified in ORS 279C.830, the Contractor shall include a provision in any and all subcontracts requiring the all Subcontractors have a valid bond filed with the Construction Contractor's Board before starting work on a project, as applicable, unless exempt. Exemptions from the bond requirement may be granted under specific circumstances as outlined in ORS 279C.836(7) for certified disadvantaged, minority, women or emerging small business enterprises. The Contractor shall contact BOLI regarding qualifications for such exemptions.

If qualified, the enterprise must provide the Construction Contractor's Board with written notification of its certification. In addition, the enterprise must notify the City that a public works bond has not been filed and provide proof of qualification prior to commencing work.

By signing this Contract, the Contractor certifies that the Contractor, and any Subcontractor who will perform work under this Contract, will file a public works bond with the Construction Contractors Board as required prior to beginning work on the project.

12. INELIGIBLE CONTRACTORS LIST

No Contractor, Subcontractor or any firm, corporation, partnership or association in which the Contractor or Subcontractor has a financial interest who appears on *the List of Contractors Ineligible to Receive Public Works Contracts*, as established by the Bureau of Labor and Industries, will perform work under this Contract, as specified in ORS 279C.860.

No Contractor, Subcontractor or any firm, corporation, partnership or association in which the Contractor or Subcontractor has a financial interest who appears on the Construction Contractor's Board *Not Qualified to Hold Public Contracts* list, will perform work under this Contract, as specified in ORS 701.227(4).

13. COMPLIANCE WITH ALL GOVERNMENT REGULATIONS/TERMINATION FOR FAILURE TO COMPLY

The Contractor shall comply with all Federal, State and local laws, codes, regulations and ordinances applicable to the work performed under this Contract. Failure to comply with such requirements shall constitute a breach of contract and shall be grounds for termination of this Contract. Damages or costs resulting from noncompliance shall be the sole responsibility of the Contractor. Other grounds for termination are set forth in Sections 108.11 and 108.12 of the Standard Construction Specification of the City of Springfield.

In accordance with ORS 279C.505, the Contractor shall;

a) Make payment promptly, as due, to all persons supplying to the Contractor labor or material for the performance of the work provided for in the Contract.

b) Promptly pay all contributions or amounts due the State Industrial Accident Fund, or private carrier of accident insurance, from such Contractor or Subcontractor incurred in the performance of the Contract. If a private carrier is used, the Contractor shall notify the Engineer as to the carrier's name and address before commencement of work.

c) Not permit any lien or claim to be filed or prosecuted against the state or a county, school district, municipality, municipal corporation or subdivision thereof, on account of any labor or material furnished.

d) Pay to the Department of Revenue all sums withheld from employees under ORS 316.167.

e) Have an employee drug testing program in place at the time of signing the Contract and will maintain such drug testing program in place over the life of the Contract. Upon request, the Contractor shall furnish a copy of the employee drug testing program to the City.

In accordance with ORS 279C.510, If demolition is involved, the Contractor shall salvage or recycle construction and demolition debris, if feasible and cost-effective as required by ORS 279C.510(1).
If lawn or landscaping maintenance is involved, the Contractor shall compost or mulch yard waste in an approved site, if feasible and cost-effective as required by ORS 279C.510(2).

SAMPLE

In accordance with ORS 279C.515, if the Contractor fails, neglects, or refuses to make prompt payment of any claim for labor or services furnished to the Contractor or a Subcontractor by any person, or the assignee of the person, in connection with the Public Works Contract as such claim becomes due, the City of Springfield may pay such claim and charge the amount of the payment against funds due or to become due the Contractor by reason of the Contract. The payment of a claim in this manner shall not relieve the Contractor or the Contractor's surety from obligation with respect to any unpaid claims.

If the Contractor or first-tier Subcontractor fails, neglects or refuses to make payment to a person furnishing labor or materials in connection with the Public Improvement Contract within 30 days after receipt of payment from the contracting agency or a Contractor, the Contractor or first-tier Subcontractor shall owe the person the amount due plus interest charges in the amount of 9 percent per annum commencing at the end of the 10-day period that payment is due under ORS 279C.580(4) and ending upon final payment unless payment is subject to a good faith dispute as defined in ORS 279C.580.

If the Contractor or a Subcontractor fails, neglects or refuses to make payment to a person furnishing labor or materials in connection with the Public Improvement Contract, the person may file a complaint with the Construction Contractors Board, unless payment is subject to a good faith dispute as defined in ORS 279C.580.

In accordance with ORS 279C.520, no person will be employed by the Contractor or Subcontractor for more than 10 hours in any one day, or 40 hours in any one week except in cases of necessity, emergency, or where the public policy absolutely requires it, and in such cases the person so employed shall be paid at least time and one-half the regular rate of pay for all times worked in excess of eight hours a day or 40 hours in any one week when the work week is five consecutive days, Monday through Friday; or in excess of 10 hours a day or 40 hours in any one week when the work week is four consecutive days, Monday through Friday; and for all work performed on a Saturday, Sunday and on any legal holiday specified in ORS 279C.540.

The Contractor, Subcontractor or other person doing, or contracting to do, or contracting for the whole or any part of the work on the Contract shall give notice to employees working on the Contract project in writing, either at the time of hire or before commencement of work on the Contract, and by posting a notice in a conspicuous location which is accessible to and frequented by employees, of the number of hours per day and days per week that the employee may be required to work. The posting must remain in place for the duration of the job.

In compliance with ORS 279C.525, the Contractor is made aware that the following federal, state, and local agencies have enacted ordinances or regulations relating to the prevention of environmental pollution or the preservation of natural resources which may affect performance of City of Springfield contracts. This is not intended to be a complete listing of agencies. Other agencies may have enacted ordinances or regulations that may apply.

If the Contractor is delayed or must undertake additional work by reason of existing ordinances, rules or regulations of agencies not cited in the Contract or due to the enactment of new or the amendment of existing statutes, ordinances, rules or regulations relating to the prevention of environmental pollution and the preservation of natural resources occurring after the submission of the successful bid, the contracting agency may, at its discretion, terminate the Contract, complete the work itself; use non-agency forces already under contract with the City, require that the underlying property owner be responsible for cleanup, solicit bids for a new contractor to provide the necessary services or issue the Contractor a change order setting forth the additional work that must be undertaken.

If the Contractor encounters a condition not referred to in the Invitation to Bid documents, not caused by the Contractor or any subcontractor employed on the project and not discoverable by a reasonable pre-bid visual site inspection, and the condition requires compliance with the ordinances, rules or regulations referred to under this regulation, the Contractor shall immediately notify the City of the condition.

SAMPLE

FEDERAL AGENCIES

Department of Agriculture
Forest Service
Soil Conservation Service
Department of the Army Corps of Engineers
Coast Guard
Department of Health and Human Services
Department of the of Interior
Bureau of Indian Affairs
Bureau of Land Management
Bureau of Outdoor Recreation
Department of Commerce
Fish and Wildlife Service
Office of Surface Mining
Reclamation and Enforcement
Bureau of Reclamation
Department of Labor
Occupational Safety and Health Administration
Mine Safety and Health Admin
Department of Transportation
Federal Highway Administration
Environmental Protection Agency

STATE AGENCIES

Department of Agriculture
Department of Energy
Department of Environmental Quality
Department of Fish and Wildlife
Department of Forestry
Department of Geology and Minerals
Department of Human Resources
Land Conservation and Development Commission
Division of State Lands
State Soil and Water Conservation Commission
Water Resources Department
Oregon Department of Transportation

LOCAL AGENCIES

City of Springfield
Planning Commission, City of Springfield
Springfield Development and Public Works
Metropolitan Wastewater Management Commission
City of Springfield Urban Renewal Districts - Downtown and Glenwood
Springfield Utility Board
Lane County
Planning Commission, Lane County
Willamalane
Lane Regional Air Protection Authority
Lane Council of Governments
Rainbow Water District
Emerald People's Utility District

In accordance with ORS 279C.530, the Contractor will;

Promptly, as due, make payments to any person, co-partnership, association or corporation, furnishing medical, surgical, and hospital care or other needed care and attention, incidental to sickness or injury, to the employees of such Contractor, of all sums which the Contractor agrees to pay for such services and all monies and sums which the Contractor:

a) May or shall have deducted from the wages of his employees for such services pursuant to the terms of Oregon Revised Statutes and any contract entered in pursuant thereto; or

b) Collected or deducted from the wages of his employees pursuant to any law, contract, or agreement for the purpose of providing or paying for such service; and

c) Will comply with ORS 656.017 and provide the required Workers' Compensation coverage, unless such employers are exempt under ORS 656.126. Contractor shall ensure that each of its Subcontractors complies with these requirements.

In accordance with ORS 279C.580, each subcontract the Contractor enters into with a first-tier Subcontractor for property or services, including a material supplier, for the purpose of performing this Contract must include the following:

a) A payment clause that obligates the Contractor to pay the first-tier Subcontractor for satisfactory performance under the subcontract within 10 days out of amounts the contracting agency pays to the Contractor under the Public Improvement Contract.

b) A clause that requires the Contractor to provide a first-tier Subcontractor with a standard form that the first-tier Subcontractor may use as an application for payment or as another method by which

SAMPLE

the Subcontractor may claim a payment due from the Contractor.

c) A clause that requires the Contractor, except as otherwise provided, to use the same form and regular administrative procedures for processing payments during the entire term of the subcontract. A Contractor may change the form or the regular administrative procedures the Contractor uses for processing payments if the Contractor:

   1.) Notifies the Subcontractor in writing at least 45 days before the date on which the Contractor makes the change; and

   2.) Includes with the written notice a copy of the new or changed form or a description of the new or changed procedure.

d) An interest penalty clause that obligates the Contractor, if the Contractor does not pay the first-tier Subcontractor within 30 days after receiving payment from the contracting agency, to pay the first-tier Subcontractor an interest penalty on amounts due in each payment the Contractor does not make in accordance with the payment clause included in the subcontract under paragraph (a) of this subsection. A Contractor or first-tier Subcontractor is not obligated to pay an interest penalty if the only reason that the Contractor or first-tier Subcontractor did not make payment when payment was due is that the Contractor or first-tier Subcontractor did not receive payment from the contracting agency or Contractor when payment was due. The interest penalty:

   1.) Applies to the period that begins on the day after the required payment date and that ends on the date on which the amount due is paid; and

   2.) Is computed at the rate specified in ORS 279C.515 (2).

The Contractor shall require the first-tier Subcontractor to include a payment clause and an interest penalty clause that conforms to the standards of subsection (3) of ORS 279C.580 in each of the first-tier Subcontractor's subcontracts and to require each of the first-tier Subcontractor's Subcontractors to include such clauses in the first-tier Subcontractors' subcontracts with each lower-tier Subcontractor or supplier.

14. NONDISCRIMINATION

The Contractor shall comply with all applicable requirements of Federal and State civil rights and rehabilitation statutes, rules and regulations.

15. RIGHTS IN DATA/OWNERSHIP OF WORK PRODUCT

(a) Work Product - All Work Product created by the Contractor and originated and prepared for the City of Springfield pursuant to this Contract, including derivative works and compilations, and whether or not such Work Product is considered a "work made for hire," shall be the exclusive property of the City. The ideas, concepts, know-how, or techniques developed during the course of this Contract by the Contractor's personnel can be used by either party in any way it may deem appropriate. Material already in the Contractor's possession, independently developed by the Contractor outside the scope of this Contract, or rightfully obtained by the Contractor from third parties, shall belong to the Contractor irrespective of their similarity to materials which might be delivered to the City of Springfield pursuant to this Contract. The Contractor shall not, however, use any written materials developed under this Contract in developing materials for others, except as provided in this section.

(b) Limited City Indemnity - If the City reuses or modifies the Work Product without the Contractor's involvement or prior written consent, to the extent permitted by Article XI, Section 7, of the Oregon Constitution, and subject to the protections afforded by the Oregon Tort Claims Act, the City shall indemnify the Contractor, within the limits of the Tort Claims Act and any other protections afforded the City, against liability for damage to life or property arising from the City's reuse or modification of the Work Product; provided however, the City shall not be required to indemnify the Contractor for any such liability arising out of or related to defective Plans and Specifications, or Contractor's breach of the Contract, professional negligence, or the negligent or wrongful acts of the Contractor's Subcontractors, employees, or agents in preparing the Plans and Specifications or testing and inspection conducted for the Project.

(c) Contractor Use of Work Product - The Contractor, despite other conditions of this provision, shall have the right to utilize such Work Products on its brochures or other literature that it may disseminate for its sales promotions, and in addition, unless specifically otherwise prohibited elsewhere in the Contract documents, the Contractor may use its standard line drawings, specifications, and calculations on other, unrelated projects.

16. PATENTS, COPYRIGHTS AND TRADEMARKS

Prior to use of designs, devices, materials, or processes protected by patent, copyright, or trademark, the Contractor shall obtain from the Entity entitled to enforce the patent, copyright, or trademark all necessary evidence of legal right. The Contractor shall indemnify, defend, and hold harmless the City from claims of patent, copyright, or trademark infringement, and from costs, expenses, and damages the Contractor or the City may be obligated to pay as a result of such infringement during or after completing the work.

17. ASSIGNMENT

The Contractor shall not assign, sell, transfer, subcontract or sublet rights, or delegate responsibilities under this Contract, in whole or in part, without the prior written approval of the City of Springfield. No such written approval shall relieve the Contractor of any obligations of this Contract, and any transferee or Subcontractor shall be considered the agent of the Contractor. The Contractor shall remain liable as between the original parties to this Contract as if no such assignment had occurred.

18. SUBCONTRACTING

Subcontracts shall provide that work performed under the subcontract shall be conducted and performed according to the terms of this Contract. Whether stated in the Subcontract Agreement itself or not, the Contractor shall remain solely responsible for administration of the subcontract, including, but not limited to the performance of the subcontracted work, progress of the subcontracted work, payment for accepted subcontracted work, and disputes and claims for additional compensation regarding all subcontracted work.

The City's approval of a Subcontractor will not create a contract between the City and the Subcontractor, shall not convey to the Subcontractor any rights against the City, and shall not relieve the Contractor or the Contractor's Surety of any of their responsibilities under this Contract.

19. DUAL PAYMENT

The Contractor shall not be compensated for work performed under this Contract from any City of Springfield agency other than the agency which is a party to this Contract.

20. ACCESS TO RECORDS

The City of Springfield and its duly authorized representatives shall have access to books, documents, papers and records of the Contractor which are directly pertinent to this Contract for the purpose of making audit, examination, excerpts and transcripts.

21. FORCE MAJEURE

Neither party to this Contract shall be held responsible for delay or default caused by fire, riot, acts of God and/or war which is beyond that party's reasonable control. The City of Springfield may terminate this Contract upon written notice after determining such delay or default will unreasonably prevent successful performance of the Contract.

22. AMENDMENTS

The terms of this Contract shall not be waived, altered, modified, supplemented or amended in any manner whatsoever, without prior written approval of the City of Springfield. No modification of this Contract shall bind either party unless reduced to writing and subscribed by both parties, or ordered by a Court.

23. WAIVER

Failure of the City to enforce any provision of this Contract shall not constitute a waiver or relinquishment by the City of the right to such performance in the future nor of the right to enforce any other provision of this Contract.

SAMPLE

24. SEVERABILITY

If any provision of this Contract is declared by a court to be illegal or in conflict with any law, the validity of the remaining terms and provisions shall not be affected and the rights and obligations of the parties shall be construed and enforced as if the Contract did not contain the particular provision held to be invalid.

25. CAPTIONS

The headings, subheadings and titles to paragraphs of this agreement are solely for the convenience of the parties and shall not be used to explain, modify, simplify, or aid in the interpretation of the provisions of this Contract. They do not form a part of this Contract, and shall not be used in construing this Contract.

26. ATTORNEY FEES

In the event a lawsuit of any kind is instituted on behalf of the City of Springfield to enforce any provision of this Contract, the Contractor shall pay such additional sums as the Court may adjudge reasonable for attorney fees plus all costs and disbursements at trial and on any appeal.

27. REMEDIES

This Contract shall be governed and construed in accordance with the laws of the State of Oregon, apart from choice of law provisions. The parties agree that the Circuit Court for the County of Lane, State of Oregon, or the Federal District Court of the State of Oregon (Eugene) is the sole and proper forum for resolving any disputes involving this Contract, any breach of this Contract, or relating to its subject matter. The Parties agree to submit themselves to the jurisdiction of such courts without challenge to the jurisdiction of these courts. This Contract shall not be construed more favorably to the City due to the preparation of this Contract by the City.

28. OWNERSHIP STATUS

Both parties understand and acknowledge that the City is a public body as specified in ORS 30.260 and maintains its status as a public body and retains all immunities and privileges granted it and its officers, agents, and employees by the Tort Claims Act (ORS 30.260 – ORS 30.295) and any and all other statutory rights granted the City as a result if its status as a public body.

29. SUCCESSORS IN INTEREST

The provisions of this Contract shall be binding upon and shall inure to the benefit of the parties to this Contract and their respective successors and assigns.

IN WITNESS WHEREOF: The said City has caused these presents to be executed by its City Manager (or Designee) as authorized by Ordinance 6281 of the Common Council of the City of Springfield, and the said Contractor has caused these presents to be executed itself.

CITY OF SPRINGFIELD, OREGON
(A Municipal Corporation)

By:

City Manager

Date

CONTRACTOR

By:

Name of Company *(Please Print)*

Contractor's Signature

Name: *(Please Print)*

Title: *(Please Print)*

Date

SAMPLE

Business Address

City **State** **Zip**

Office Phone

Cell Phone

E-Mail Address

SAMPLE

PREVAILING WAGE RATE INFORMATION

Prevailing Wage Rates information can be found at the following website:

https://www.oregon.gov/boli/WHD/PWR/Pages/PWR-Rate-Publications---2019.aspx

For the proper Prevailing Wage Rates applicable to this project please refer to the following publications:

1.) *Prevailing Wage Rate Publication; Prevailing Wage Rates for Public Works Contracts in Oregon with an effective date of January 1, 2019.*

The following Amendments to the Prevailing Wage Rates for Public Works Contracts in Oregon also apply;

a.) N/A

2.) *Prevailing Wage Rates State Apprenticeship Rates with an effective date of January 1, 2019.*

The following Amendments to the Prevailing Wage State Apprenticeship Rates also apply;

a.) N/A

CITY OF SPRINGFIELD

Special Provisions

for

P21149

Bike/Pedestrian Safety RRFB/ Crossing Construction

Engineer's Seal

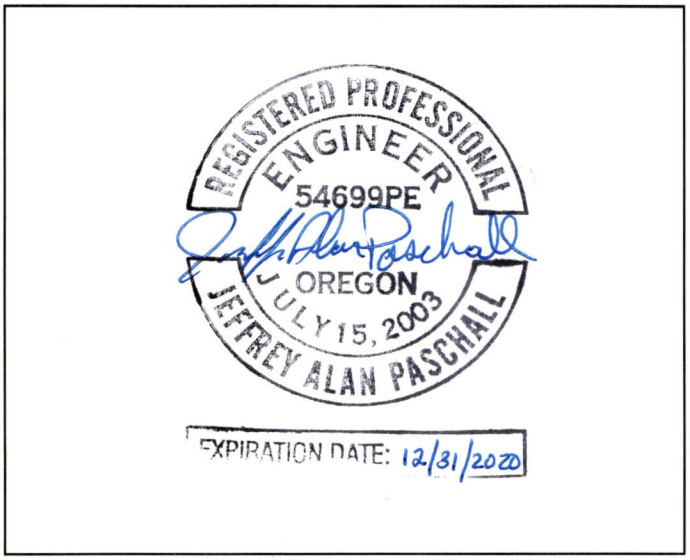

SPECIAL PROVISIONS

SECTION A – General Requirements

P21149 – Bike/Pedestrian Safety RRFB/Crossing Construction

A1.1 Codes and Standards

All work shall be performed in accordance with the highest standard of practice in the industry and shall be furnished in conformance with all applicable codes, statutes or standards that apply to this work including, but not limited to, any applicable Federal, State or City of Springfield Codes, Standards and Ordinances.

A1.2 Applicable Standard Specifications

Division 100, General Requirements, of the 1994 Edition of the Standard Construction Specifications of the City of Springfield, Oregon, including all revisions at date of Bid opening, and Parts 00200 through 03000 of the 2018 Oregon Standard Specifications for Construction shall apply to this Invitation to Bid and the ensuing construction contract, except as may be modified herein. If any section of the 2018 Oregon Standard Specifications for Construction should refer to Section 00100 of the same, the Bidder will instead refer to the equivalent section in Division 100 of the 1994 Edition of the Standard Construction Specifications, including all revisions at date of Bid opening. In the case of discrepancy, unless noted otherwise herein, the provision determined by the City to be more restrictive shall apply.

A1.3 Form of Proposal

REPLACE SECTION 102.02 "FORM OF PROPOSAL" OF THE STANDARD CONSTRUCTION SPECIFICATIONS:

"The Proposal and the proposal guarantee in the form of a bid bond, certified check, or cashier's check, shall be enclosed in a sealed, labeled and addressed envelope, as required in the Instructions to Bidders and filed as required therein. The outside of the envelope shall plainly identify: (1) The project name and (2) The bid opening date.

All Proposals must be clearly and distinctly typed or written with ink or indelible pencil.

All Proposals shall be on the form furnished by Owner, and in addition to necessary unit price items and total prices in the column of totals to make a complete Bid, all applicable blanks giving general information must be filled in and the Bids signed by an officer or duly authorized representative of the Bidder. Any statement accompanying and tending to qualify a Bid may cause rejection of such Bid, unless such statement is required, in a Proposal embracing alternate Bids. All bid documents except plans must be returned with the Bid.

Unless otherwise specified, Bidders shall bid on all Bid items included in the Proposal, and the low Bidder shall be determined as noted in Subsection 103.01 AWARD OF CONTRACT. Except as provided herein Proposals which are incomplete or fail to comply to all items required in the Proposal may be rejected."

INSERT IN ITS PLACE THE FOLLOWING:

"ALL BID DOCUMENTS, EXCEPT PLANS, MUST BE RETURNED WITH THE BID. This includes all documents contained in the original bid book, whether they require the completion of information or not, and any addendum that may be issued pertaining to the bid in question. The

only exceptions to this are any plans or drawings, which are not required to be submitted as a part of your Bid.

The Bid Submittal, Bid Bond, Certified Check, or Cashier's Check shall be enclosed in a sealed and labeled envelope. The outside of the envelope shall plainly identify: (1) The project name and project number and (2) The Bid opening date. All Bids must be clearly and distinctly typed or written with ink or indelible pencil. Unless otherwise specified, Bidders shall bid on all Bid items, and must include in their Bid prices the entire cost of each item of work set forth in the Bid.

Sealed Bids shall be addressed to and received at the Office of the Finance Director, City Hall, 225 Fifth St. Springfield, Oregon, 97477 at, or before, the time and date noted on the Invitation to Bidders, after which time the Bids will be publicly opened and read aloud.

All Bids shall be on the form furnished by the City, and in addition to necessary unit price items and total prices in the column of totals to make a complete Bid, all applicable blanks giving general information must be filled in and the Bids signed by an officer or duly authorized representative of the Bidder. The only exceptions to this requirement are the Performance Bond, Payment Bond, Statutory Public Works Bond and the Contract documents which are provided here as a reference. However, if you are awarded the Bid, you will be required to submit fully executed copies of these documents upon request. Any statement accompanying and tending to qualify a Bid may cause rejection of such Bid, unless such statement is required in a Bid embracing alternate Bids.

If, in the opinion of the City, the items or prices in any Bid appear unbalanced, incomplete, or fail to comply with all the terms required, the Bid may be rejected."

A1.4 Proposal Guaranty and Organization

REPLACE SECTION 102.05 "PROPOSAL GUARANTY AND ORGANIZATION" OF THE STANDARD CONSTRUCTION SPECIFICATIONS:

"Each Bid must be accompanied by a Bid Bond, cash or a certified or cashier's check upon a bank in good standing, payable to the Finance Director of the City of Springfield, Oregon, in an amount equal to at least 10% of the total amount of the bid. Such Proposal guaranty shall be forfeited and become the property of the City in case the Bidder shall fail or neglect to furnish a satisfactory Performance Bond and Payment Bond and to execute the Contract within 10 days (Saturday, Sunday and holidays excepted) after receiving said Contract from the City for execution. Bid bonds submitted shall be on the form provided by the City in the Bid document."

INSERT IN ITS PLACE THE FOLLOWING:

"As required by ORS 279C.365(4) each Bid shall be accompanied by a Bid Bond, cash, or a certified or cashier's check written upon a bank in good standing and in a form acceptable to the City, payable to the Finance Director of the City of Springfield, Oregon, in an amount equal to at least 10 percent of the total amount of the Bid. Bid Bonds shall be issued by a surety company registered to issue bonds in the State of Oregon, and utilizing a bond form acceptable to the City. The City will accept AIA Document A310-2010 Bid Bond (sample form enclosed). The Bid Bond may not be altered.

Such Bid Guarantee shall be forfeited and become the property of the City in case the Bidder shall fail or neglect to furnish a satisfactory Performance and/or Payment Bond issued by a viable bond company acceptable to the City as required by ORS 279C.380 and to execute the Contract within ten (10) days (Saturday, Sunday, and holidays excepted) after receiving Contract from the City for execution. For information regarding Performance and Payment Bond requirements see City of Springfield Contract document, Section 5. City Bonding."

A1.5 Interpretation of Contract Documents

REPLACE SECTION 102.07 "INTERPRETATION OF CONTRACT DOCUMENTS" OF THE STANDARD CONSTRUCTION SPECIFICATIONS:

"If it should appear to a Bidder that the work to be done, or matters relative thereto, is not sufficiently described or explained in the Contract Documents, or that Contract Documents are not definite and clear, the Bidder may make written inquiry regarding same to the Engineer at least 5 days before the scheduled closing time for filing Bids. Requests to clarify the source of materials, equipment suppliers, or any other such matter which does not modify, change, increase, or decrease the scope of the work require no action by the Owner other than a response to the Bidder requesting the clarification. Clarifications which modify, change, increase, or decrease the scope of work, require issuance of an Addendum by the Owner for the interpretation to become effective. Such addenda will be mailed to all holders of the Contract Documents. Oral instruction or information concerning the Contract Documents or the project given out by officers, employees, or agents of the Owner to prospective Bidders shall not bind the Owner. "

INSERT IN ITS PLACE THE FOLLOWING:

"If it should appear to a Bidder that the work to be done is not sufficiently described or explained in the Contract Documents, or that Contract Documents are not definite and clear, the Bidder shall make written inquiry regarding same to the individual shown, in the manner instructed and within the timeframe indicated in the Invitation to Bid advertisement. Questions received will be evaluated and if, in the judgment of the City, the response does not alter or amend the requirements or scope of the Invitation to Bid, but merely clarifies existing information, the response will be entered on the Clarifications Log and posted to the project webpage as shown in the Invitation to Bid. If, in the judgment of the City, additional information or interpretation is necessary, such information shall be supplied in the form of an addendum to all individuals, firms, and corporations listed on the Plan Holders List and those individuals that attended the Pre-Bid Meeting and provided an accurate e-mail address on the sign-in sheet. Such addenda shall have the same binding effect as though contained in the main body of the Contract Documents. The City is not responsible for any explanation, clarification, interpretation or approval made or given in any manner except by written addenda issued by City."

A1.6 Addenda to Contract Documents

REPLACE SECTION 102.08 "ADDENDA TO CONTRACT DOCUMENTS" OF THE STANDARD CONSTRUCTION SPECIFICATIONS:

"Any addenda issued by the Owner, which may include changes, corrections, additions, interpretations, or information, and issued 48 hours or more before the scheduled closing time for filing the Bids, Saturday, Sunday and legal holidays not included, shall be binding upon the Bidder. Owner shall supply copies of such addenda to all Contractors who have obtained copies of the Contract Documents for the purposes of bidding thereon. Failure of the Contractor to receive or obtain such addenda shall not excuse him from compliance therewith, if he is awarded the Contract."

INSERT IN ITS PLACE THE FOLLOWING:

"Any addenda issued by the City, which may include changes, corrections, additions, interpretations, or information issued 72 hours or more before the scheduled closing time for filing the Bids shall be binding upon the Bidder. Addenda will be posted to the City's website at www.springfield-or.gov/DPW/InvitationBid.htm. The Contractor should check the website frequently for new postings during the open bid period. The City shall make a reasonable effort to notify all individuals, firms, and corporations listed on the Plan Holders List and those

individuals that attended the Pre-Bid Meeting and provided an accurate e-mail address on the sign-in sheet when addenda are issued. Failure of the Contractor to receive or obtain such addenda shall not excuse them from compliance."

A1.7 Familiarity With Laws and Ordinances

REPLACE THE THIRD PARAGRAPH OF SECTION 102.09 "FAMILIARITY WITH LAWS AND ORDINANCES" OF THE STANDARD CONSTRUCTION SPECIFICATIONS:

"In compliance with ORS 279.318 the Contractor is made award that the following Federal, State, and local agencies have enacted ordinances or regulations relating to the prevention of environmental pollution or the preservation of natural resources which may affect performance of the City of Springfield contracts.

FEDERAL AGENCIES

Department of Agriculture
Forest Service
Soil Conservation Service
Department of the Army-Corp of Engineers
Coast Guard
Dept. of Health & Human Services
Dept. of Interior-of Indian Affairs
Bureau of Land Management
Bureau of Outdoor Recreation
Fish and Wildlife Service
Office of Surface Mining
Reclamation & Enforcement
Department of Labor
Occupational Safety & Health Administration
Mine Safety & Health Admin.
Department of Transportation
Federal Highway Admin.
Environmental Protection Agency

STATE AGENCIES

Department of Agriculture
Department of Energy
Dept. of Environmental Quality
Dept. of Fish & Wildlife
Dept. of Forestry
Dept. of Geology & Minerals
Dept. of Human Resources
Land Conservation and Development Bureau Commission
Division of State Lands
State Soil and Water Conservation Commission
Water Resources Department

LOCAL AGENCIES

Common Council, City of Springfield
County Court, Lane County
Planning Commission, City of Springfield
Planning Commission, Lane County
Lane Regional Air Pollution Authority
Springfield Utility Board"

INSERT IN ITS PLACE THE FOLLOWING:

"In compliance with ORS 279C.525, the Contractor is made aware that the following federal, state, and local agencies have enacted ordinances or regulations relating to the prevention of environmental pollution or the preservation of natural resources which may affect performance of City of Springfield contracts. This is not intended to be a complete listing of agencies. Other agencies may have enacted ordinances or regulations that may apply.

If the Contractor is delayed or must undertake additional work by reason of existing ordinances, rules or regulations of agencies not cited in the Contract or due to the enactment of new or the amendment of existing statutes, ordinances, rules or regulations relating to the prevention of environmental pollution and the preservation of natural resources occurring after the submission of the successful bid, the contracting agency may, at its discretion, terminate the Contract, complete the work itself; use non-agency forces already under contract with the City, require that the underlying property owner be responsible for cleanup, solicit bids for a new contractor to provide the necessary services or issue the Contractor a change order setting forth the additional work that must be undertaken.

If the Contractor encounters a condition not referred to in the Invitation to Bid documents, not caused by the Contractor or any Subcontractor employed on the project and not discoverable by a reasonable pre-bid visual site inspection, and the condition requires compliance with the ordinances, rules or regulations referred to under this regulation, the Contractor shall

immediately notify the City of the condition.

FEDERAL AGENCIES

Department of Agriculture
Forest Service
Soil Conservation Service
Department of the Army Corps of Engineers
Coast Guard
Department of Health and Human Services
Department of the of Interior
Bureau of Indian Affairs
Bureau of Land Management
Bureau of Outdoor Recreation
Department of Commerce
Fish and Wildlife Service
Office of Surface Mining
Reclamation and Enforcement
Bureau of Reclamation
Department of Labor
Occupational Safety and Health Administration
Mine Safety and Health Admin
Department of Transportation
Federal Highway Administration
Environmental Protection Agency

STATE AGENCIES

Department of Agriculture
Department of Energy
Department of Environmental Quality
Department of Fish and Wildlife
Department of Forestry
Department of Geology and Minerals
Department of Human Resources
Land Conservation and Development Commission
Division of State Lands
State Soil and Water Conservation Commission
Water Resources Department
Oregon Department of Transportation

LOCAL AGENCIES

City of Springfield
Planning Commission, City of Springfield
Springfield Development and Public Works
Metropolitan Wastewater Management Commission
City of Springfield Urban Renewal Districts - Downtown and Glenwood
Springfield Utility Board
Lane County
Planning Commission, Lane County
Willamalane
Lane Regional Air Protection Authority
Lane Council of Governments
Rainbow Water District
Emerald People's Utility District"

A1.8 Award of Contract

ADD THE FOLLOWING PARAGRAPH TO SECTION 103.01 "AWARD OF CONTRACT" OF THE STANDARD CONSTRUCTION SPECIFICATIONS:

"Prior to awarding the Contract, the City may, at its sole discretion, require Contractors and/or Subcontractors to demonstrate to the City's satisfaction that they have a complete and clear understanding of all requirements of the Prevailing Wage Rate Laws contained in ORS 279C.800 through 279C.870 and possess the expertise necessary for fulfilling their obligations pertaining to these requirements throughout the administration of the Contract. In determining competency, the City may consider Certified Payroll Reports submitted by the Contractor and/or Subcontractor for projects previously performed for the City, copies of Certified Payroll Reports submitted to other public entities, references from other public entities attesting to the Contractor's expertise, or an interview with the Contractor regarding their personnel resources and expertise or their ability to obtain the resources and expertise necessary to meet all contractual responsibilities in accordance with ORS 279C.375."

A1.9 Protection of Property

ADD THE FOLLOWING TO THE END OF SECTION 105.11 "PROTECTION OF PROPERTY" OF THE STANDARD CONSTRUCTION SPECIFICATIONS:

"The Contractor shall provide the Engineer with photographic documentation of pre-construction and post-construction conditions on all private properties affected by the Contractor's work. The Contractor shall provide digital photos of each area of work on private properties sufficient to

document the conditions prior to the start of the Contractor's work and immediately after completion of the Contractor's work. All photos shall be submitted to the Engineer by line and street address in an organized manner on compact discs prior to the requesting that the final payment be made.

The Contractor shall obtain a written release from the property owner on the Homeowner Approval and Release Form confirming that the site restoration work is satisfactory to the property owner. The Contractor shall document that a minimum of two attempts were made to secure a release from each property owner by providing a list of property owners by address and indicating the dates and times of each attempt. This list and all signed Homeowner Approval and Release Forms shall be submitted to the Engineer prior to requesting that the final payment be made."

A1.10 Trade Names, Approved Equals or Substitutions

ADD THE FOLLOWING TO THE BEGINNING OF SECTION 107.06 "TRADE NAMES, APPROVED EQUALS OR SUBSTITUTIONS" OF THE STANDARD CONSTRUCTION SPECIFICATIONS:

"Brand Name or Equal Specification means a specification that uses one or more manufacturers' names, makes, catalog numbers or similar identifying characteristics to describe the standard of quality, performance, functionality or other characteristics needed to meet the contracting agency's requirements. The "Equal" product, component or process shall be the same or better than that named in function, performance, reliability, quality and general configuration. Determination of equal in reference to the project design requirements will be made by the Engineer, pursuant to Subsection 106.07. Unless otherwise specified, whenever a manufacturer's name brand or model is mentioned, it is to be understood that the phrase "approved equal" is assumed to follow thereafter, whether it does in fact or not. Such specification authorizes Contractors to offer goods or services that are equivalent or superior to those brands named or described in the specification."

A1.11 Insurance

REPLACE SECTION 107.06 "INSURANCE" OF THE STANDARD CONSTRUCTION SPECIFICATIONS:

"The Contractor shall provide and maintain general liability, auto liability, property, and workers' compensation insurance for life of this Contract.

General Liability Insurance
The Contractor shall maintain an ISO Commercial General Liability insurance policy (or an equivalent policy approved by Owner) with combined single limits of at least $1,000,000 per occurrence for bodily injury, personal injury, and property damage and an aggregate limit of a least $2,000,000. The policy shall include coverage for contractual liabilities.

Comprehensive Automobile Liability Insurance
The Contractor shall maintain an automobile liability insurance policy with combined single limits of at least $1,000,000 per occurrence for bodily injury, personal injury, and property damage.

Additional Insured Endorsement
The general and automobile insurance policies specified above shall include endorsements naming as an additional insured "the City of Springfield, its agents, employees and officials all while acting within their official capacity as such."

Property Insurance
Depending on the nature of the construction contemplated under this contract, Owner may require Contractor to provide property insurance. Refer to Special Provisions section of this Contract.

Workers' Compensation Insurance
Contractor, its subcontractors, if any, and all employers working under this agreement are subject employers under the Oregon Workers' Compensation Law and shall comply with ORS 656.017, which requires them to provide workers' compensation coverage for all their subject workers.

Contractor is responsible for maintaining workers' compensation insurance for his employees and assuring that his subcontractors, if any, also maintain workers' compensation insurance. Contractor shall defend, indemnify, and hold Owner harmless from any liability for any workers' compensation claims costs, fines, or costs whatsoever arising from Contractor's or his subcontractors' failure to comply with ORS 656.017.

Additional Policies and Special Coverages
Refer to the Special Provisions section of this Contract for additional coverages that may be required.

Certificates of Insurance
Certificates of insurance evidencing all policies required by this Contract shall be delivered to the Owner prior to the commencement of any work. All certificates shall include a 30-day notice of cancellation clause and required additional insured endorsements. The Owner has the right to reject any certificate for unacceptable coverage and/or companies."

INSERT IN ITS PLACE THE FOLLOWING:

"INSURANCE

All insurance shall carry a rating of A- or better with A. M. Best and must be approved by the City as to terms, conditions and form prior to beginning work. Certificates of insurance evidencing all policies and endorsements required by this Contract shall be delivered to the Owner prior to the commencement of any work. The Owner has the right to reject any certificate or endorsement for unacceptable coverage and/or companies.

Liability and Property Damage

The Contractor shall maintain in force for the duration of the Contract, to include the warranty period, a Commercial General Liability insurance policy written on an occurrence basis with limits not less than $2,000,000 per occurrence and $3,000,000 in the aggregate. The policy will be endorsed with Additional Insured, Per Project Aggregate, Products and Completed Operations and Primary and Noncontributory endorsements. The City, its employees, officials and agents will be named as Additional Insured's where operations are being conducted related to this Contract on the Commercial General policy as respects to work or services performed under this Contract to the extent that the death or bodily injury to persons or damage to property arises out of the fault of the Contractor or the fault of the Contractor's agents, representatives or Subcontractors. The following statement will appear on the face of the certificate; "The City, its employees, officials and agents are all named as additional insured while acting in their capacity as such." The City's Additional Insured status for Products and Completed Operations hazards shall extend for at least one year beyond formal Council acceptance of the project. This insurance shall be primary and shall be paid and applied first in its entirety prior to any application of insurance the CITY may carry on its own. A 30-day notice of cancellation or material change in coverage clause shall be included.

The Contractor shall maintain in force for the duration of the Contract, to include the warranty period, an Automobile Liability insurance policy (owned, non-owned, and hired) with limits not less than $1,000,000 per occurrence. The policy will be endorsed with Additional Insured and Primary and Noncontributory endorsements. The City, its employees, officials and agents will be named as Additional Insured's where operations are being conducted related to this Contract on the Automobile Liability policy as respects to work or services performed under this Contract to the extent that the death or bodily injury to persons or damage to property arises out of the fault of the Contractor or the fault of the Contractor's agents, representatives or Subcontractors. The following statement will appear on the face of the certificate; "The City, its employees, officials and agents are all named as additional insured while acting in their capacity as such." This insurance shall be primary and shall be paid and applied first in its entirety prior to any application of insurance the CITY may carry on its own. A 30-day notice of cancellation or material change in coverage clause shall be included.

Workers' Compensation

The Contractor shall provide and maintain Workers' Compensation coverage with limits no less than $500,000 for it employees, officers, agents, or partners, as required by applicable Workers' Compensation laws. If the Contractor is exempt from this coverage a written statement, signed by the Contractor, explaining the reason for the exemption will be provided to the City prior to commencement of any work.

Course of Construction and/or Installation Floater

In the event Course of Construction/Installation Floater insurance is required by the City due to unique project specifications or the Contractor requests advance payment by the City for the purchase of materials pursuant to Section 109.07 of the City of Springfield Standard Construction Specifications, the Contractor shall provide Course of Construction/Installation Floater insurance in an amount equal to the value of the advance payment requested. The policy shall provide coverage for all risks and shall be approved by the City as to terms, conditions and form covering the replacement cost of the applicable materials prior to the release of payment. The policy shall name the City of Springfield as Loss Payee. The coverage shall be maintained in full force for the duration of this Contract. The City, at its option, may elect to obtain additional coverage.

Asbestos Abatement (only applicable to Asbestos Specific Contracts)

If applicable to this Contract, the Contractor shall maintain in full force a Commercial General Liability policy approved by the City as to terms, conditions and form that is Asbestos Specific with a minimum limit of $2,000,000 per occurrence and $3,000,000 in the aggregate written on a form that meets the following criteria:

a. A full occurrence form, or
b. A limited occurrence form with at least a three-year (3) tail, or
c. A claims made form with a three-year (3) tail.

Pollution Liability Coverage (only applicable to Pollution Specific Contracts)

If applicable to this Contract, the Contractor shall maintain in full force a Commercial General Liability policy approved by the City as to terms, conditions and form that is Pollution Specific with a minimum limit of $2,000,000 per occurrence and $3,000,000 in the aggregate written on a form that meets the following criteria:

a. A full occurrence form, or
b. A limited occurrence form with at least a three-year (3) tail, or
c. A claims made form with a three-year (3) tail.

Professional Liability Coverage (only applicable to Contracts if specified)

If Professional Liability insurance is required, the City must approve the terms, conditions and limits prior to commencement of any work.

Additional Policies and Special Coverages

Refer to the Special Provisions section of this Contract for additional coverages that may be required.

Railroad Protective Liability Coverage

If work being performed under this Contract is near railroad tracks or a railroad right of way and the Railroad requires special insurance (for example: Railroad Protective Liability Coverage) Contractor will be responsible for meeting the Railroad insurance requirements before any work commences. Any insurance required to be purchased by the Railroad is in addition to the insurance required by the City.

Subcontractors

The Contractor shall require all Subcontractors to provide and maintain General Liability, Auto Liability and Workers' Compensation insurance and, as applicable, Professional, Asbestos and Pollution Liability with coverage's equivalent to those required of the General Contractor in this Contract. The Contractor shall require certificates of insurance from all Subcontractors as evidence of coverage.

Additional Insured Endorsement

All certificates of insurance, with the exception of Professional Liability and Railroad Protective Liability, must include an endorsement which lists the City of Springfield as a named additional insured. The following statement will appear on the face of the certificate; "The City, its employees, officials and agents are all named as additional insured while acting in their capacity as such."

Evidence of Coverage and Notice of Cancellation or Material Change in Coverage

Evidence of the required coverages issued by a company satisfactory of the City shall be provided to the City by way of a certificate of insurance before any work or services commence. A 30-day notice of cancellation or material change in coverage clause shall be included.

If the approved insurance company will not provide this 30 day notice, it shall be the responsibility of the Contractor to provide written notice to the City within two (2) days of the Contractor becoming aware that their coverage has been cancelled or materially changed. The Contractor shall e-mail notification directly to Nathan Bell, Finance Director at nbell@springfield-or.gov with a copy to Terri White at twhite@springfield-or.gov. Regardless of the circumstances causing the Contractor's insurance coverage to cease or be modified, it is the Contractor's responsibility to notify the City as described above.

Failure to maintain the proper insurance or provide notice of cancellation or material change shall, at the City's option, be grounds for immediate termination of this Contract. _____
(Contractor initials)

Equipment and Material

The Contractor shall be responsible for any loss, damage, or destruction of its own property, equipment, and materials used in conjunction with the work."

A1.12 Contract Time

ADD THE FOLLOWING AT THE END OF THE SECOND PARAGRAPH OF 108.04 "CONTRACT TIME" OF THE STANDARD CONSTRUCTION SPECIFICATIONS:

"This provision does not apply to the seasonal suspension of work pursuant to Subsection 108.05."

A1.13 Suspensions of Work

REPLACE SECTION 108.05 "SUSPENSIONS OF WORK" OF THE STANDARD CONSTRUCTION SPECIFICATIONS:

"Suspension by Owner

The Contractor shall immediately suspend work on the project wholly or in part as directed by the Owner for good and sufficient reason. In the event of such suspension, Owner shall, except in emergency, and except as hereinafter provided, give Contractor three days' notice and work shall be resumed within five days after notice has been given by Owner to Contractor to do so. Owner shall allow Contractor an extension of time for completion corresponding to the total period of temporary suspension, and shall reimburse him for necessary rental of unused equipment, services of watchpersons and other unavoidable expenses by reason of the suspension without fault of Contractor. Contractor shall not be entitled to damages, intangible or overhead costs or anticipated profits from such temporary suspension.

Suspension by Engineer

The Contractor shall immediately suspend work on the project wholly or in part as directed by the Engineer pursuant to Subsections 105.01 and 105.02 due to: (l) failure to correct unsafe conditions for working personnel, the general public or Owner's employees, (2) failure to carry out provisions of the Contract Documents, and (3) failure to carry out orders or directions, for such periods as the Engineer may deem necessary due to conditions considered unsuitable for the performance of the work or for any reason deemed to be in the public interest.

The Contractor shall immediately suspend work on the project wholly or in part as directed by the Engineer, for such periods as the Engineer may deem necessary, pursuant to Subsection 105.19 for failure to immediately correct defective and unacceptable work.

Suspension by Contractor

Suspending operations because of seasonal conditions or other unsuitable conditions pursuant to Subsection 108.06 shall require the concurrence of the Engineer.

Responsibility of Contractor

Voluntary or involuntary suspension or slowdown, with or without the approval of the Engineer, and suspension of work ordered by the Engineer will not be grounds for claims or damages, idle equipment or labor, or extra compensation. No allowance or compensation will be made on account of such suspensions of work except as provided hereinbefore and as provided in Subsection 108.06.

At the commencement of, and during any suspensions of work, the Contractor shall be responsible for the care of work performed and take every precaution to prevent any damage

or deterioration of the work. The Contractor shall be responsible for work, including temporary protection devices to warn, safeguard, protect, guide and inform traffic during suspension, the same as though its performance had been continuous and without interferences.

The Contractor shall be responsible and bear all costs for providing suitable provisions for traffic control and for maintenance and protection of the work during suspension for cause. If the Contractor fails to provide for temporary traffic control and to maintain the work, the Engineer may immediately proceed to maintain the work. The cost of such maintenance shall be deducted from payments due or to become due to the Contractor.

Resumption of Work

In all cases of suspension, work will be resumed only upon written order of the Engineer or Owner."

INSERT IN ITS PLACE THE FOLLOWING:

"Temporary Suspension of Work by Owner/Engineer

The Contractor shall immediately suspend work on the project wholly or in part as directed by the Owner/Engineer for good and sufficient reason. In the event of such suspension, Owner/Engineer shall, except in emergency, and except as hereinafter provided, give Contractor three days' notice and work shall be resumed within five days after notice has been given by Owner/Engineer to Contractor to do so. Owner/Engineer shall allow Contractor an extension of time for completion corresponding to the total period of temporary suspension, and shall reimburse him for necessary rental of unused equipment, services of watchpersons and other unavoidable expenses by reason of the suspension without fault of Contractor. Contractor shall not be entitled to damages, intangible or overhead costs or anticipated profits from such temporary suspension. This subsection does not apply to Seasonal Suspension of Work.

Seasonal Suspension of Work by Engineer

The Contractor shall immediately suspend work on the project wholly or in part as directed by the Engineer pursuant to Subsections 105.01 and 105.02 due to seasonal weather conditions determined, at the sole discretion of the Engineer, to be unsuitable for the performance of work. The day count will be suspended during this time. See "Responsibility of Contractor" subsection following for Contractor's responsibilities during the suspension period. Work shall not resume without written approval from the Engineer.

Suspension of Work by Engineer for Failure to Comply

The Contractor shall immediately suspend work on the project wholly or in part as directed by the Engineer pursuant to Subsections 105.01 and 105.02 due to: (l) failure to correct unsafe conditions for working personnel, the general public or Owner's employees, (2) failure to carry out provisions of the Contract Documents, and (3) failure to carry out orders or directions. Work shall be suspended for such periods as the Engineer may deem necessary due to conditions considered unsuitable for the performance of the work or for any reason deemed to be in the public interest.

Suspension of Work by Engineer for Failure to Correct Defective or Unacceptable Work

The Contractor shall immediately suspend work on the project wholly or in part as directed by the Engineer, for such periods as the Engineer may deem necessary, pursuant to Subsection 105.19 for failure to immediately correct defective and unacceptable work.

Suspension of Work by Contractor

Suspending operations because of seasonal conditions or other unsuitable conditions pursuant to Subsection 108.06 shall require the concurrence of the Engineer.

Responsibility of Contractor Under This Subsection

Voluntary or involuntary suspension or slowdown, with or without the approval of the Engineer/Owner, and suspension of work ordered by the Engineer/Owner will not be grounds for claims or damages, idle equipment or labor, or extra compensation. No allowance or compensation will be made on account of such suspensions of work except as provided hereinbefore and as provided in Subsection 108.06.

At the commencement of, and during any suspensions of work, the Contractor shall be responsible for the care of work performed and take every precaution to prevent any damage or deterioration of the work. In the case of pipework, the Contractor shall provide necessary provisions to maintain sanitary sewer and storm water functionality on both the public and private sides. The Contractor shall be responsible for work, including temporary protection devices to warn, safeguard, protect, guide and inform traffic during suspension, the same as though its performance had been continuous and without interferences. The Contractor shall restore fencing or place temporary fencing, to include temporary security fencing, as needed to provide secure restraint for pets and to protect private property.

The Contractor shall be responsible and bear all costs for providing suitable provisions for traffic control and for maintenance and protection of the work during suspension for cause. If the Contractor fails to provide for temporary traffic control and to maintain the work, the Engineer may immediately proceed to maintain the work. The cost of such maintenance shall be deducted from payments due or to become due to the Contractor.

Resumption of Work

In all cases of suspension, work will be resumed only upon written order of the Engineer or Owner."

A1.14 Submission of Certified Payroll

REPLACE THE SECOND PARAGRAPH OF SECTION 109.07 OF THE STANDARD CONSTRUCTION SPECIFICATIONS:

"Once before the first payment and each time the prevailing wage rates change, and once before final payment is made, Contractor shall supply and file with Owner a statement in writing under oath, in form prescribed by the State Labor Commission and which conforms with ORS Chapter 279, certifying the hourly rate of wages paid each classification of workman not exempt by statute who is employed upon such project and further certifying that no workman employed has been paid less than minimum prevailing wage rate. Each Subcontractor who performed work on the project during the period covered by the payment may be required to file with Owner a similar statement which covers its workmen."

INSERT IN ITS PLACE THE FOLLOWING:

"It shall be the responsibility of the Contractor and any subcontractors to submit certified payroll statements to the City as to the wage rates paid to each worker as follows:

As specified in ORS 279C.845, the Contractor or the Contractor's surety and every Subcontractor or the Subcontractor's surety shall file certified statements with the public agency in writing, on a

form prescribed by the Commissioner of the Bureau of Labor and Industries, certifying the hourly rate of wage paid each worker whom the Contractor or the Subcontractor has employed upon the public works, and further certifying that no worker employed upon the public works has been paid less than the prevailing rate of wage or less than the minimum hourly rate of wage specified in the Contract. The certificate and certified statement shall be verified by the oath of the Contractor or the Contractor's surety or Subcontractor or the Subcontractor's surety that the Contractor or Subcontractor has read the certified statement and certificate and knows the contents thereof and that the same is true to the Contractor or Subcontractor's knowledge. Certified statements (also referred to as certified payroll reports) shall be submitted to the City no later than the 5th business day of the following month for which the certified statement and certificate are being presented, regardless of whether any actual work is performed on the project or not. This information must be submitted to the City and also retained by the Contractor and Subcontractor(s) for three years.

Contracting agencies and general contractors are required to withhold 25% of amounts to Contractors if certified payrolls are not filed by the Contractor as required for work performed on projects subject to the prevailing wage rate law. Failure of Contractors to comply with the certified payroll filing requirements of the law, therefore, will result in a negative fiscal impact to those Contractors of up to 25% of their amount owed.

Each worker employed in the performance of this contract, either by the Contractor or Subcontractor or other person doing or contracting to do or contracting for the whole or any part of the work of the contract, must be paid not less than the specified minimum hourly rate of wage in accordance with ORS 279C.838 and 279C.840."

A1.15 Progress Payment

REPLACE THE SIXTH PARAGRAPH OF SECTION 109.07 OF THE STANDARD CONSTRUCTION SPECIFICATIONS:

"Progress payment will be made by the Owner on a monthly basis no later than the 20th day of the subsequent month of work performed, except that, additional days may be required when a payment is accompanied by one or more of the following: an extension of completion time, change order or extra bill. Payment may be made via use of checks or warrants at the option of the Owner for the amount of the approved estimate, less retainage."

INSERT IN ITS PLACE THE FOLLOWING:

"Progress payment will be made by the City no later than the fourth Friday of the month in the month subsequent to the work being performed, except that additional days may be required when the Contractor fails to submit complete and accurate certified payroll reports which are in compliance with ORS279C.845 when due, or a payment is accompanied by one or more of the following: an extension of completion time, change order or bill. If the Contractor fails to submit acceptable certified payroll reports when due, or one or more of the previously stated exceptions apply, the progress payment may be made up to fourteen (14) days after the date the certified payroll or other required information in question is received by the City."

A1.16 Oregon Products

Contractor's attention is directed to the provisions of Oregon Law, ORS 279A.120 regarding the preference for products that have been manufactured or produced in Oregon. Contractor shall use Oregon-produced or manufactured materials with respect to common building materials such as cement, sand, crushed rock, gravel, plaster, etc., and Oregon-manufactured products in all cases where price, fitness, availability and quality are otherwise equal.

A1.17 Salvage and Debris

Unless otherwise indicated on the drawings or in the specifications, all castings, pipe, equipment, demolition debris, fences, trees, shrubs, spoil or any other discarded material or equipment shall become the property of the Contractor and shall be salvaged or disposed of in a manner compliant with applicable Federal, State and local laws and regulations governing disposal of such waste products. No burning of debris or any other discarded material will be permitted. The Contractor shall perform any demolition for the completion of this project and shall salvage and recycle all construction and demolition debris as is feasible and cost effective, in accordance with ORS 279C.510.

END OF SECTION

SPECIAL PROVISIONS

SECTION B – Scope of Work

P21149 – Bike/Pedestrian Safety RRFB/Crossing Construction

B1. GENERAL

B 1.1 Project Description

Work consists of the installation of a raised pedestrian crossing for Riverbend Elementary, a Rectangular Rapid Flashing Beacon (RRFB) for Thurston and Agnes Stewart Middle Schools and the conversion of a pedestrian beacon at South 42nd Street at Mt Vernon into a RRFB pedestrian crossing.

B1.2 Cooperation with Utilities

Contact SUB Electric Operations at 541-726-2395 at least 72 hours prior to any work or equipment encroaching within 20 feet of electrical lines. At certain locations, power, light, and telephone poles may interfere with excavation and operation of the Contractor's equipment. Coordinate with SUB Electric Operations 72 hours prior about supporting poles. The cost to support poles will be paid by the City of Springfield and shall not be included in the Contractors cost.

Utility Contact Phone Number(s)

1. SUB Water	541-726-2396
2. SUB Electrical	541-726-2395
3. Northwest Natural	541-974-3724 (cell)
4. City of Springfield Operations (Storm / Sewer)	541-726-3761

B1.3 Construction Zone Work Hours

Unless otherwise directed by the Engineer, normal construction work zones with active project operations are to be conducted Monday through Friday. Work outside the hours of 7:00 a.m. to 6:00 p.m. is not permitted unless Council approval is given allowing for a variance from the City's noise ordinance.

B 1.4 Record Drawings

Contractor shall maintain at the site one set of specifications, full size drawings, shop drawings, equipment drawings and supplemental drawings which shall be corrected as the work progresses to show all changes made. Drawings shall be available for inspection by the Engineer. Upon completion of the contract and prior to final payment, specifications and drawings shall be turned over to the Engineer.

B 1.5 Competent Person Designation

Contractor shall designate a qualified and experienced "competent person" at the site whose duties and responsibilities shall include enforcement of Oregon - OSHA regulations regarding excavations, the prevention of accidents, and the maintenance and supervision of construction site safety precautions and programs.

B 1.6 Vehicle Parking

The vehicles of the Contractor's and subcontractors' employees shall be parked in accordance with local parking ordinances.

B 1.7 Survey Services

The City of Springfield shall provide survey services as required and as described in Section 105.09 and 105.10 of the City of Springfield Standard Construction Specifications. All requests for survey services shall require a 48 hour minimum notice.

B1.8 Prosecution and Progress - Project Work Schedules

Before starting work, the Contractor shall submit for written approval a proposed construction schedule to the Engineer. If it is desirable to carry on operations in more than one location simultaneously, a schedule shall be submitted for each location two weeks in advance of beginning such operations. In the event that the Contractor's proposed construction schedule does not meet the necessary construction program schedule as determined by the City, the Contractor shall resubmit a schedule that conforms as approved.

The schedule shall show the proposed order of work and indicate the time required for completion of the major items of work. This working schedule shall take into account the passage or handling of traffic with the least practicable interference therewith and the orderly, timely and efficient prosecution of work. It will also be used as an indication of the sequence of the major construction operations and as a check on the progress of work.

The Contractor shall provide weekly progress schedules of expected project activities. The progress schedules shall indicate the Contractor's plan of work in sufficient detail to enable both the Contractor and the Engineer to plan, coordinate, appraise, document, and control their respective Contract responsibilities. The schedule of work, and the work forces and equipment supplied by the Contractor, shall be adjusted adequately to allow for the completion of the contract work by the stated contract completion date. Any work done without notification to the Engineer is subject to rejection.

B1.9 Specifications

SECTION 00210 - MOBILIZATION

Comply with Section 00210 of the Oregon Standard Specifications for Construction.

SECTION 00225 – TEMPORARY TRAFFIC CONTROL - COMPLETE

Comply with Section 00225 of the Oregon Standard Specifications for Construction modified as follows:

00225.90 Payment (b) Method "B" Lump Sum Basis

Temporary Work Zone Traffic Control - Complete, Bid Items 2, 15 and 31 will be paid on a Lump Sum (LS) basis.

SECTION 00280 - EROSION AND SEDIMENT CONTROL

Comply with Section 00280 of the Oregon Standard Specifications for Construction modified as follows:

00280.46 Sediment Controls - Add the following:

(j) Erosion Control, Bid Items 3, 16 and 32, shall be constructed as shown on Erosion Control Plan Sheets.

00280.90 Payment (a) Erosion Control

Erosion Control, Bid Items 3, 16 and 32, will be paid in accordance with the Standard Specifications.

SECTION 00406 – TUNNELING, BORING AND JACKING

Comply with Section 00406 of the Oregon Standard Specifications for Construction modified as follows:

00406.00 Scope – Delete this section in its entirety and replace it with the following:

"This Work consists of installing conduits, pipes, casings, linings and sleeves by tunneling, boring, jacking and horizontal directional drilling without excavating the overlying surface."

00406.01 Descriptive Terms – Add the following:

Horizontal Directional Drilling (HDD) – Horizontal Directional Drilling includes all methods by which a conduit, casing, pipe or sleeve is pushed or pulled into place and in which the excavation method precludes the stationing of a worker within the conduit without stopping or removing the excavation Equipment.

00406.80 Measurement – Delete this section in its entirety and replace it with the following:

Horizontal Directional Drilling, Bid Items 4 and 17, shall be measured on a per Foot (FT) basis.

00406.90 Payment – Delete the second paragraph beginning with "If tunneling, boring, jacking"

Payment for HDD shall be separate from the Lump Sum payment for the remainder of the Rectangular Rapid Flashing Beacon Installation paid under Bid Items 13 and 28, Rectangular Rapid Flashing Beacon Installation, Complete in Place.

Add the following pay item:

Pay Item	Unit of Measurement
(h) Horizontal Directional Drilling (Bid Items 4, 17)	Foot (FT)

SECTION 00445– SANITARY, STORM, CULVERT, SIPHON AND IRRIGATION PIPE

Comply with Section 00445 of the Oregon Standard Specifications for Construction modified as follows:

00445.00 Scope - Add the following:

Bid Item 33 pays for the 8-inch ASTM 3034 SDR 35 PVC Storm Sewer Pipe needed to connect to existing stormwater pipes, including excavation for the trench, removal and disposal of asphalt surfacing, native soil and existing pipe, any fittings, bedding, and backfill required.

Bid Item 5 pays for the 10-inch ASTM 3034 SDR 35 PVC Storm Sewer Pipe needed to connect to existing stormwater pipes, including excavation for the trench, removal and disposal of asphalt surfacing, native soil and existing pipe, any fittings, bedding, and backfill required.

Dewatering is considered incidental to all pipe work.

00445.80 Measurement – (a) Pipes – Depth - Delete this section in its entirety.

00445.90 Payment – Add the following pay item to the pay item list:

Pay Item	Unit of Measurement
(b) 8-inch ASTM D3034 SDR 35 PVC Storm Sewer Pipe (Bid Item 33)	Foot (FT)
(b) 10-inch ASTM D3034 SDR 35 PVC Storm Sewer Pipe (Bid Item 5)	Foot (FT)

SECTION 00470 – MANHOLES, CATCH BASINS AND INLETS

Comply with Section 00470 of the Oregon Standard Specifications for Construction modified as follows:

004700.00 Scope – Add the following:

Install new Catch Basin – Complete in Place shown on Plan Sheet 4 according to City of Springfield Standard Drawing 4-11, Bid Item 34. All work associated with the installation of the catch basin, including furnishing and placing all materials, and furnishing all equipment and incidentals to complete the work as specified.

Install new Curb Inlet – Complete in Place, Type 2 1/2A with manhole frame and lid, shown on Plan Sheet P4 according to City of Springfield Standard Drawing 4-9, Bid Item 6. All work associated with the installation of the curb inlet, including furnishing and placing all materials, and furnishing all equipment and incidentals to complete the work as specified.

00470.90 Payment - Add the following pay item to the pay item list:

Pay Item	Unit of Measurement
(l) Curb Inlet – Complete in Place (Bud Item 6)	Each (EA)
(m) Catch Basin – Complete in Place (Bid Item 34)	Each (EA)

SECTION 00744 –ASPHALT CONCRETE PAVEMENT

Comply with Section 00744 of the Oregon Standard Specifications for Construction modified as follows:

00744.00 Scope - Add the following:

Level 3, ½-inch Dense Asphalt Concrete Pavement (ACP) shall be the Lane County 2019 Approved Mix.

Level 3, ½-inch Dense Asphalt Concrete Pavement (ACP), Bid Item 35, shall match back to existing thickness, including required compacted aggregate base. See Plan Sheet 4 for the 51st St Raised Crossing project. Hot Mix ACP shall be used. All work is incidental to existing surfacing replacement and shall be included in the bid price for ACP. No additional payment will be made for surface damaged or otherwise removed outside the pay width limit.

00744.780 Measurement - Delete this subsection, except for the number and title, and replace it with the following:

The quantities for ACP will be measured on an area basis.

00744.90 Payment - Delete this subsection, except for the number and title, and replace it with the following:

The accepted quantity of ACP incorporated into the project will be paid for at the Contract unit price, per Square Foot (SF), for item Level 3, ½-inch Dense Asphalt Concrete Pavement (ACP), Bid Item 35.

Payment will be payment in full for furnishing and placing all materials, and for furnishing all equipment, labor, and incidentals necessary to complete the work as specified. No separate or additional payment will be made for asphalt cement, mineral filler, lime, and anti-stripping or other additives.

SECTION 00759 – MISCELLANEOUS PORTLAND CEMENT CONCRETE STRUCTURES

Comply with Section 00759 of the Oregon Standard Specifications for Construction modified as follows:

00759.00 Scope - Add the following:

Removal limits shall be determined in the field by the Engineer prior to removal.

Curbing along the back of the sidewalk along ramps and landings is considered incidental to Bid Items 9, 20 and 38, Monolithic Curb, 4-inch Concrete Sidewalks and Ramps.

Any additional concrete required for the transition from the 5-inch Non-Reinforced Concrete Island, Bid Item 18, to the 4-inch concrete sidewalk, doweling, and Type 1 bi-directional yellow markers shall be considered incidental to Bid Item 21, 4-inch Concrete Walk, Median. All Asphalt Concrete Paving (ACP) associated with Bid Item 8, Concrete Curb and Gutter Installation, is considered incidental. No additional payment will be made for bringing ACP back to existing thickness.

00759.90 Payment – Delete pay item (b) Concrete Islands and add the following pay items to the pay item list:

Pay Item	Unit of Measurement
(b) 5-inch Non-Reinforced Concrete Island (Bid Item 18)	Square Foot (SF)
(o) Truncated Domes (Bid Items 7, 19, 36)	Square Foot (SF)
(s) Concrete Curb and Gutter Installation (Bid Items 8, 37)	Foot (FT)
(t) Monolithic Curb, 4-inch Concrete Sidewalk and Ramps (Bid Items 9, 20, 38)	Square Foot (SF)
(u) 4-inch Concrete Walk, Median (Bid Item 21)	Square Foot (SF)
(v) Reinforced Concrete Raised Pedestrian Crossing (Bid Item 39)	Square Foot (SF)

SECTION 00867 – PAVEMENT MARKINGS

Comply with Section 00867 of the Oregon Standard Specifications for Construction modified as follows:

All new striping shall be completed using City approved thermoplastic material. Contractor shall replace all striping removed or damaged through construction activities outside the removal area at the Contractor's expense. Removal of existing "SCHOOL X-ING" Pavement Markings and all 24-inch White Bar at the South 32nd Street Pedestrian Crossing is considered incidental to Bid Item 22, 24-inch White Bar – Crosswalk, Bid Item 23, 24-inch White Bar – Stop Bar and Bid Item 26, "SCHOOL X-ING" Pavement Markings.

Note: It is the Contractor's responsibility to verify all existing striping locations prior to construction.

00867.45 Installation – Beginning with the sentence "Apply one or more of the following marking material

types:" add the following:

Under **"Type B: Preformed, Fused Thermoplastic Film"** add the following:

24-inch White Bar – Stop Bar, Bid Items 11 and 23, and "SCHOOL X-ING" Pavement Markings, Bid Items 12 and 26, shall be Type B, Preformed Fused Thermoplastic Film, Pre-Mark Vizigrip (Non-Slip)", 125 mil, by Ennis-Flint or approved equivalent.

Longitudinal Lines, to include 4-inch Yellow Longitudinal, Bid Item 24, and 12-inch Yellow Transverse Median Bars, Bid Item 25, shall be Type B, Preformed Fused Thermoplastic Film, "Permaline" with SWARCO beads 3130, by Ennis- Flint, or approved equivalent.

Under **"Type B-HS: Preformed, Fused Thermoplastic Film High Skid"** add the following:

Type B-HS Preformed, Fused Thermoplastic Film High Skid shall be used for 24-inch White Bar - Crosswalk, Bid Items 10, 22 and 40.

00867.90 Payment - Add the following pay items to the pay item list:

Pay Item	Unit of Measurement
(u) 24-inch White Bar - Crosswalk (Bid Items 10, 22, 40)	Foot (FT)
(v) 24-inch White Bar – Stop Bar (Bid Item 11, 23)	Foot (FT)
(w) 4-inch Yellow Longitudinal (Bid Item 24)	Foot (FT)
(x) 12-inch Yellow Transverse Median Bars (Bid Item 25)	Foot (FT)
(y) "SCHOOL X-ING" Pavement Marking (Bid Items 12, 26)	Each (EA)

SECTION 00940 – SIGNS

Comply with Section 00940 of the Oregon Standard Specifications for Construction modified as follows:

00940.00 Scope - Add the following:

Sign Installation, Bid Items 27 and 41, includes R4-7 median signs on the South 32nd Street Pedestrian Crossing and the 51st Street Pedestrian Crossing signage only. All other signage is considered incidental to Bid Items 13 and 28, Rectangular Rapid Flashing Beacon Installation, Complete in Place.

00940.80 Measurement - Delete this section, except for the number and title, and replace it with the following:

Sign installation shall be measured according to each sign assembly installed.

00940.90 Payment - Add the following pay items to the pay item list:

Pay Item	Unit of Measurement
(g) Sign Installation (Bid Item 27 and 41)	Each (EA)

SECTION 00990 – TRAFFIC SIGNALS

Comply with Section 00990 of the Oregon Standard Specifications for Construction modified as follows:

00990.00 Scope - Add the following:

Traffic signal foundations and all associated work, except for the School Zone Flasher Foundation and Relocation, Bid Item 29, shall be considered incidental to the Rectangular Rapid Flashing Beacon Installation, Complete in Place, Bid Items 13 and 28, and shall be drilled shafts conforming with Section 00963 of the Oregon Standard Specifications for Construction. No additional payment will be made for drilled shafts. The Contractor should be prepared to use temporary casing to maintain an open hole. Temporary casing should be removed as concrete is being placed.

Flashing Beacon Installations shall be Eltec Brand Rectangular Rapid Flashing Beacons, Model SL55, or approved equivalent. All poles, signage on the signal poles, wiring, audible push buttons, flashing bars, controllers and any other associated equipment necessary for a complete flashing beacon system, as shown on the plans, are considered incidental to Bid Items 13 and 28, Rectangular Rapid Flashing Beacon Installation, Complete in Place.

Conversion of the pedestrian beacon at South 42nd and Mt Vernon to a RRFB, Bid Item 42, consists of work associated with modifications called out on Plan Sheets P3 and P4 and shown in red.

00990.43(a) Pedestrian Push Button - Delete the last sentence, and replace it with the following:

"Install push buttons in cast aluminum housing with yellow powder coat finish, and watertight o-ring seals."

00990.90 Payment – Delete pay item (f) Flashing Beacon Installation and add the following pay items to the pay item list:

Pay Item	Unit of Measurement
(f) Rectangular Rapid Flashing Beacon Installation, Complete in Place (Bid Items 13, 28)	Lump Sum (LS)
(i) School Zone Flasher Foundation and Relocation (Bid Item 29)	Lump Sum (LS)
(j) S 42nd St and Mt Vernon Rapid Rectangular Flashing Beacon Conversion (Bid Item 42)	Lump Sum (LS)

END OF SECTION

P21149 BIKE/PED SAFETY RRFB/CROSSING CONSTRUCTION (THURSTON RD & 64TH ST RRFB PORTION)

PROJECT DESCRIPTION

THIS PORTION (1 OF 4) OF THE PROJECT WILL CONSIST OF CONSTRUCTING A PEDESTRIAN CROSSING WITH RRFB FLASHING LIGHTS AND STRIPING AT THE INTERSECTION OF THURSTON ROAD AND 64TH STREET NEAR THURSTON MIDDLE SCHOOL. THIS PORTION OF THE PROJECT WAS DESIGNED UNDER P41048 THURSTON RD. AND 64TH STREET RRFB.

LEGEND

- RIGHT OF WAY (ROW) LINE
- GAS LINE
- FIBER OPTIC (NO. OF CABLES)
- WATER LINE
- POWER (ELECTRIC)
- STORM SEWER (EXISTING)
- SANITARY SEWER (EXISTING)
- COMMUNICATION LINE (EXISTING)
- TV LINE (EXISTING)
- GAS VALVE
- WATER VALVE
- FIRE HYDRANT
- WATER METER
- UTILITY BOX
- POWER POLE/LIGHT
- CATCH BASIN (EXISTING)
- CURB INLET (NEW)
- STORM MANHOLE (NEW)
- SANITARY MANHOLE (EXISTING)
- SANITARY MANHOLE (NEW)
- STORM AREA DRAIN (NEW)
- MAIL BOX
- UTILITY POLE

ABBREVIATIONS

AC	ASPHALTIC CONCRETE	G	GAS	RCP	REINFORCED CONCRETE PIPE
ABAN	ABANDON(ED)	GALV	GALVAIZED	RD	ROAD
ADA	AMERICANS W/ DISABILITIES ACT	GR	GRADE	RDCR	REDUCER
AL	ALUMINUM	GRVL	GRAVEL	REINF	REINFORCE(D)(ING)(MENT)
APPROX	APPROXIMATE	GV	GATE VALVE	RESTR	RESTRAIN(ED)
APPVD	APPROVED	HORIZ	HORIZONTAL	REQ'D	REQUIRED
ASSY	ASSEMBLY	HWY	HIGHWAY	ROW	RIGHT OF WAY
ARV	AIR RELEASE VALVE	HP	HIGH PRESSURE	SCHED	SCHEDULE
BLDG	BUILDING	ID	INSIDE DIAMETER	SD	STORM DRAIN
BM	BENCHMARK	IE	INVERT ELEVATION	SERV	SERVICE
BO	BLOWOFF	INSTL	INSTALL	SHT(S)	SHEETS
BTM	BOTTOM	LDAP	LAND & DRAINAGE ALTERATION PERMIT	SL	SLOPE
C/L	CENTER LINE	LAT	LATERAL	SPECS	SPECIFICATIONS
CB	CATCH BASIN	LF	LINEAL FEET	SPL	SPOOL
CCP	CONCRETE CULVERT PIPE	LP	LOW PRESSURE	SQ	SQUARE
CI	CAST IRON	MATL(S)	MATERIAL(S)	SQ FT	SQUARE FOOT
CG	CURB/GUTTER	MAX	MAXIMUM	SS	SANITARY SEWER
CL	CLASS	MFR(S)	MANUFACTURER(S)	SST	STAINLESS STEEL
CO	CLEANOUT	MH(S)	MANHOLE(S)	ST	STREET
CON(C)	CONCRETE	MHSD	MANHOLE STORM DRAIN	STA	STATION
CONST	CONSTRUCTION	MHSS	MANHOLE SANITARY SEWER	STL	STEEL
COP	COPPER	MIN	MINIMUM	STD	STANDARD
COS	CITY OF SPRINGFIELD	MJ	MECHANICAL JOINT	SUB	SPRINGFIELD UTILITY BOARD
CPLG	COUPLING	MUTCH	MANUAL ON UNIFORM TRAFFIC CONTROL DEVICES	S/W	SIDEWALK
CR	CRUSHED ROCK	NTS	NOT TO SCALE	TEL/T	TELEPHONE
CV	CHECK VALVE	OC	ON CENTER	TB	THRUST BLOCK
CY	CUBIC YARD	OD	OUTSIDE DIAMETER	TEMP	TEMPORARY
D	DRAIN	ODOT	OREGON DEPARTMENT OF TRANSPORTATION	THK	THICK
DET	DETAIL	OVHD	OVERHEAD UTILITY	THRU	THROUGH
DI	DUCTILE IRON	P	POWER	TV	TELEVISION
DIA/ø	DIAMETER	PCC	PORTLAND CEMENT CONCRETE	TYP	TYPICAL
DR	DRIVE	PE	PLAIN END	VERT	VERTICAL(LY)
DWG	DRAWING	PERM	PERMANENT	W	WATER
DWY	DRIVEWAY	P/L	PROPERTY LINE	W/	WITH
EA	EACH	POLY	POLYETHYLENE	W/IN	WITHIN
EL	ELEVATION	PROP	PROPOSED	W/O	WITHOUT
ELEC/E	ELECTRICAL	PRESS	PRESSURE	W/M	WATER METER
EOP	EDGE OF PAVEMENT	PROP	PROPOSED		
EQ	EQUAL	PS	PUMP STATION		
EQUIP	EQUIPMENT	PUGD	UNDERGROUND POWER		
ESMT	EASEMENT	PV	PLUG VALVE		
EX	EXISTING	PVC	POLYVINYL CHLORIDE		
FAB	FABRICATE	PVMT	PAVEMENT		
FD	FLOOR DRAIN				
FH	FIRE HYDRANT				
FIN GR	FINISHED GRADE				
FL	FLOW LINE				
FLG	FLANGE(D)				
FM	FORCE MAIN				
FT	FOOT				
FTG	FITTING				

VICINITY MAP

SHEET INDEX

TITLE SHEET	SHT. P1
GENERAL NOTES	SHT. P2
DEMOLITION PLAN	SHT. P3
CONSTRUCTION PLAN	SHT. P4
CURB GRADES PLAN	SHT. P5
ELECTRICAL PLAN	SHT. P6
DETAILS S. PED RRFB	SHT. D1
DETAILS PED PUSH BUTTON POST	SHT. D2
DETAILS N. PED RRFB	SHT. D3
DETAILS HORIZONTAL BORING	SHT. D4
STRIPING DETAILS	SHT. D5
EROSION CONTROL NOTES	SHT. E1
EROSION CONTROL	SHT. E2

No.	Revision/Issue	Date
DRAWN: CJG		

NOTE:

UTILITY LOCATIONS ARE APPROXIMATE
DO NOT
SCALE OR LOCATE UTILITY LINES OR MAINS FROM THESE DRAWINGS
CALL FOR UTILITY LOCATES 811 or (1-800-332-2344)

THE CONTRACTOR SHALL BE RESPONSIBLE FOR DETERMINING UTILITY LOCATIONS PRIOR TO BEGINNING OF CONSTRUCTION. THESE PLANS MAY NOT SHOW ALL UTILITIES OR THE CORRECT LOCATIONS.

P21149 BIKE/PED SAFETY RRFB/CROSSING CONSTRUCTION (THURSTON RD & 64TH ST RRFB PORTION)

City of Springfield
PUBLIC WORKS / ENGINEERING
225 FIFTH STREET, SPRINGFIELD, OR 97477
PHONE (541) 726-3753 FAX (541) 736-3689
INTERNET www.springfield-or.gov

ENGINEERS STAMP

REGISTERED PROFESSIONAL ENGINEER
54699PE
OREGON
JULY 15, 2003
JEFFREY ALAN PASCHALL
7-15-19

EXPIRATION DATE: 12-31-20

SHEET P1

GENERAL NOTES

A. ALL MATERIALS AND WORKMANSHIP WITHIN THE PUBLIC RIGHT-OF-WAY OR PUBLIC EASEMENTS SHALL MEET STANDARD SPECIFICATIONS FOR CONSTRUCTION, AS SPECIFIED IN SECTION 'A' OF THE SPECIAL PROVISIONS IN ADDITION TO ALL OTHER SPECIFICATIONS REFERENCED OR INCLUDED, AND IN ADDITION TO THESE PLANS.

B. OREGON LAW REQUIRES THE CONTRACTOR TO FOLLOW RULES ADOPTED BY THE OREGON UTILITY NOTIFICATION CENTER. THESE RULES ARE SET FORTH IN OAR 952-001-0010 THROUGH OAR 952-001-0100. THE CONTRACTOR MAY OBTAIN COPIES OF THE RULES BY CALLING THE CENTER. NOTE: THE TELEPHONE NUMBER FOR THE OREGON UTILITY NOTIFICATION CENTER IS (800) 332-2344 OR 811.

C. LOCATION AND/OR DEPTH OF EXISTING UTILITIES SHOWN ON PLANS ARE APPROXIMATE. ALL UTILITIES MAY NOT APPEAR ON PLANS. IT IS THE CONTRACTOR'S RESPONSIBILITY TO CONTACT ALL UTILITY COMPANIES FOR UNDERGROUND LOCATION OF FACILITIES AT LEAST 48 HOURS PRIOR TO EXCAVATING OR "POTHOLING". THE "ONE-CALL" NUMBER IS 332-2344 OR 811.

D. CONTRACTOR SHALL BE RESPONSIBLE FOR COORDINATION WITH UTILITY COMPANIES ON THE TIMING OF INSTALLATION OF THEIR FACILITIES.

E. SPRINGFIELD CODE 10.2.1 REQUIRES NOTIFICATION OF OPEN TRENCHING FOR THE PROJECT TO ALLOW POSSIBLE COMMUNICATION CABLE INSTALLATION.

F. THE CONTRACTOR SHALL PROVIDE ALL TRAFFIC CONTROL DEVICES NECESSARY TO PROTECT AND SAFEGUARD THE PUBLIC AND WORKERS AGAINST INJURY AND PROTECT THE WORK AGAINST DAMAGE. ALL TEMPORARY TRAFFIC CONTROL SIGNING AND DEVICES SHALL BE IN PLACE PRIOR TO BEGINNING WORK. ALL TRAFFIC CONTROL SHALL CONFORM TO THE MANUAL ON UNIFORM TRAFFIC CONTROL DEVICES FOR STREETS AND HIGHWAYS (MUTCD), CURRENT EDITION, AS SUPPLEMENTED AND AMENDED BY THE OREGON SUPPLEMENTS. FLAGGING SHALL BE PERFORMED AS SHOWN IN THE "OREGON TEMPORARY TRAFFIC CONTROL HANDBOOK FOR OPERATIONS OF THREE DAYS OR LESS", 2011 OR CURRENT EDITION. THE CONTRACTOR SHALL BE RESPONSIBLE FOR ANY REQUIRED TRAFFIC CONTROL AS FIELD CONDITIONS WARRANT. THE CONTRACTOR SHALL SUBMIT A TRAFFIC CONTROL PLAN AT THE PRE-CONSTRUCTION CONFERENCE FOR CITY REVIEW AND APPROVAL.

G. ALL SANITARY AND STORM SEWER CONNECTIONS TO EXISTING CITY OWNED FACILITIES (PIPE, CATCH BASINS, MANHOLES, ETC.) SHALL BE INSPECTED BY THE CONTRACTOR AND THE CITY'S PUBLIC WORKS MAINTENANCE DEPARTMENT PRIOR TO HOOK UP. CONTACT MAINTENANCE AT (541-726-3761) OR CITY CONSTRUCTION INSPECTOR NO LESS THAN 48 HOURS PRIOR TO DESIRED INSPECTION TIME.

H. WHERE CONNECTING TO AN EXISTING PIPE, THE CONTRACTOR SHALL EXPOSE THE END OF THE EXISTING PIPE AND ALLOW THE ENGINEER TO VERIFY EXACT LOCATION AND ELEVATION, CONDITION, AND POSITIVE FLOW BEFORE LAYING ANY NEW PIPE IN THAT SYSTEM.

I. THE SEWER GRADE SHALL BE PER THE PLANS AND SPECIFICATIONS AND WITH THE MINIMUM COVER AS SHOWN ON THE PLANS.

J. THE CONTRACTOR SHALL INTERNALLY TELEVISION INSPECT THE SEWER AFTER ALL BACKFILL AND BEFORE THE FINAL LIFT OF ASPHALT PAVING. THE CONTRACTOR SHALL SUPPLY THE CITY WITH A WRITTEN T.V. REPORT AND VIDEO TAPE OR DVD FOR CITY APPROVAL AT LEAST 2 WORKING DAYS BEFORE THE PRE-PAVING MEETING.

K. CONTRACTOR TO SCHEDULE A PRE-PAVING CONFERENCE 24 HOURS PRIOR TO PAVING. CONTACT THE CONSTRUCTION INSPECTOR.

L. ALL JOINTS BETWEEN EXISTING AND NEW ASPHALT PAVING SHALL BE SEALED WITH POLYMERIZED ASPHALT AND SANDED TO PREVENT PICK UP.

M. COMPACTION REQUIREMENTS:

LAYER	RATE	TEST
SUBGRADE	95%	T99
CRUSHED ROCK	95%	T180
ASPHALT (LOCAL)	90%	RICE
ASPHALT (COLLECTOR/ARTERIAL)	92%	RICE

N. CONCRETE COMPRESSIVE STRENGTH REQUIREMENTS (PSI):

CONCRETE USE	FIELD	LABORATORY
SIDEWALK/ADA RAMPS	3000	3450
CURBS/GUTTERS	3500	4025
DRIVEWAYS	3500	4025
PAVEMENT	4000	4600

O. THIS PROJECT SHALL COMPLY WITH THE AMERICAN DISABILITIES ACT REQUIREMENTS SUCH AS INCORPORATION OF DESIGN CRITERIA FOR RAMPS, MAXIMUM PROFILE AND CROSS SECTION SLOPES FOR SIDEWALKS, UPGRADING EXISTING FACILITIES WHERE MAJOR CONSTRUCTION IS OCCURRING, AND BUILDING WARNING FOR OBJECTS IN SIDEWALK SUCH AS CURBING OR LANDSCAPING AROUND MAILBOXES.

P. CONTRACTOR IS RESPONSIBLE TO OBTAIN APPLICABLE PERMITS FROM OTHER AGENCIES WITH JURISDICTIONS SUCH AS LANE COUNTY, OREGON DEPARTMENT OF TRANSPORTATION, OREGON DIVISION OF STATE LANDS, THE ARMY CORPS OF ENGINEERS, OR THE DEPARTMENT OF ENVIRONMENTAL QUALITY.

Q. ALL IMPROVEMENTS THAT WILL BE PRIVATELY OWNED AND MAINTAINED WILL BE BOUND BY THE CURRENT REQUIREMENTS OF THE STATE OF OREGON STRUCTURAL SPECIALITY CODE, PLUMBING SPECIALTY CODE, AND/OR CITY OF SPRINGFIELD BUILDING DIVISION REQUIREMENTS. CONTRACTOR IS RESPONSIBLE TO OBTAIN APPLICABLE PERMITS FROM OTHER CITY DEPARTMENTS PRIOR TO DOING PRIVATE WORK.

R. EROSION CONTROL MEASURES SHALL BE IN PLACE PRIOR TO THE START OF CONSTRUCTION. SEE EROSION CONTROL PLAN.

S. STREET TREES: ONLY STREET TRESS WITH A MINIMUM TRUNK CALIPER OF 2 IN. MEASURED 6 IN. ABOVE THE ROOT STEM SHALL BE SELECTED FOR PLANTING.

T. A PRE-CONSTRUCTION CONFERENCE IS REQUIRED BEFORE START OF CONSTRUCTION. ALL UTILITIES, CONTRACTORS, AND CITY REPRESENTATIVES SHALL HAVE RECEIVED THE FINAL APPROVED PLANS AT LEAST 5 WORKING DAYS PRIOR TO THE PRE-CONSTRUCTION CONFERENCE.

U. THE ENGINEER AND/OR CITY HAVE THE RIGHT TO REQUIRE ADDITIONAL WORK NOT SHOWN HEREIN BUT NECESSARY FOR THE SUCCESSFUL COMPLETION OF THE PROJECT. STD. SPEC. 104.08.

V. REQUESTS BY THE CONTRACTOR FOR CHANGES SHALL BE APPROVED BY THE ENGINEER AND THE CITY IN WRITING PRIOR TO IMPLEMENTATION.

W. CONTRACTOR SHALL SUBMIT EVIDENCE OF INSURANCE IN ACCORDANCE WITH THE STANDARD SPECIFICATION TO THE CITY FOR APPROVAL PRIOR TO BEGINNING WORK.

X. CONTRACTOR SHALL BE AWARE IF PAVING IS NOT SCHEDULED OR DOES NOT OCCUR PRIOR TO OCTOBER 15TH, WET WEATHER PROVISIONS INCLUDING ADDITIONAL ROCK SUBSTRUCTURE AND GEOTEXTILE FABRIC SHALL BE USED. REFER TO STANDARD SPECIFICATION SHEET 301.1.01 AND THE TYPICAL CROSS SECTIONS CONTAINED HEREIN FOR DETAILS.

Y. THE CONTRACTOR SHALL VERIFY EACH EXISTING SANITARY AND STORM CONNECTION.

No.	Revision/Issue	Date
DRAWN: CJG		

NOTE:

UTILITY LOCATIONS ARE APPROXIMATE
DO NOT
SCALE OR LOCATE UTILITY LINES OR MAINS FROM THESE DRAWINGS
CALL FOR UTILITY LOCATES 811 or (1-800-332-2344)

THE CONTRACTOR SHALL BE RESPONSIBLE FOR DETERMINING UTILITY LOCATIONS PRIOR TO BEGINNING OF CONSTRUCTION. THESE PLANS MAY NOT SHOW ALL UTILITIES OR THE CORRECT LOCATIONS.

P21149 BIKE/PED SAFETY RRFB/CROSSING CONSTRUCTION (THURSTON RD & 64TH ST RRFB PORTION)

City of Springfield

PUBLIC WORKS / ENGINEERING
225 FIFTH STREET, SPRINGFIELD, OR 97477
PHONE (541) 726-3753 FAX (541) 736-3689
INTERNET www.springfield-or.gov

ENGINEERS STAMP

REGISTERED PROFESSIONAL ENGINEER
54699PE
OREGON
JULY 15, 2003
JEFFREY ALAN PASCHALL
12-31-19

EXPIRATION DATE: 12-31-20

SHEET

P2

DEMOLITION PLAN

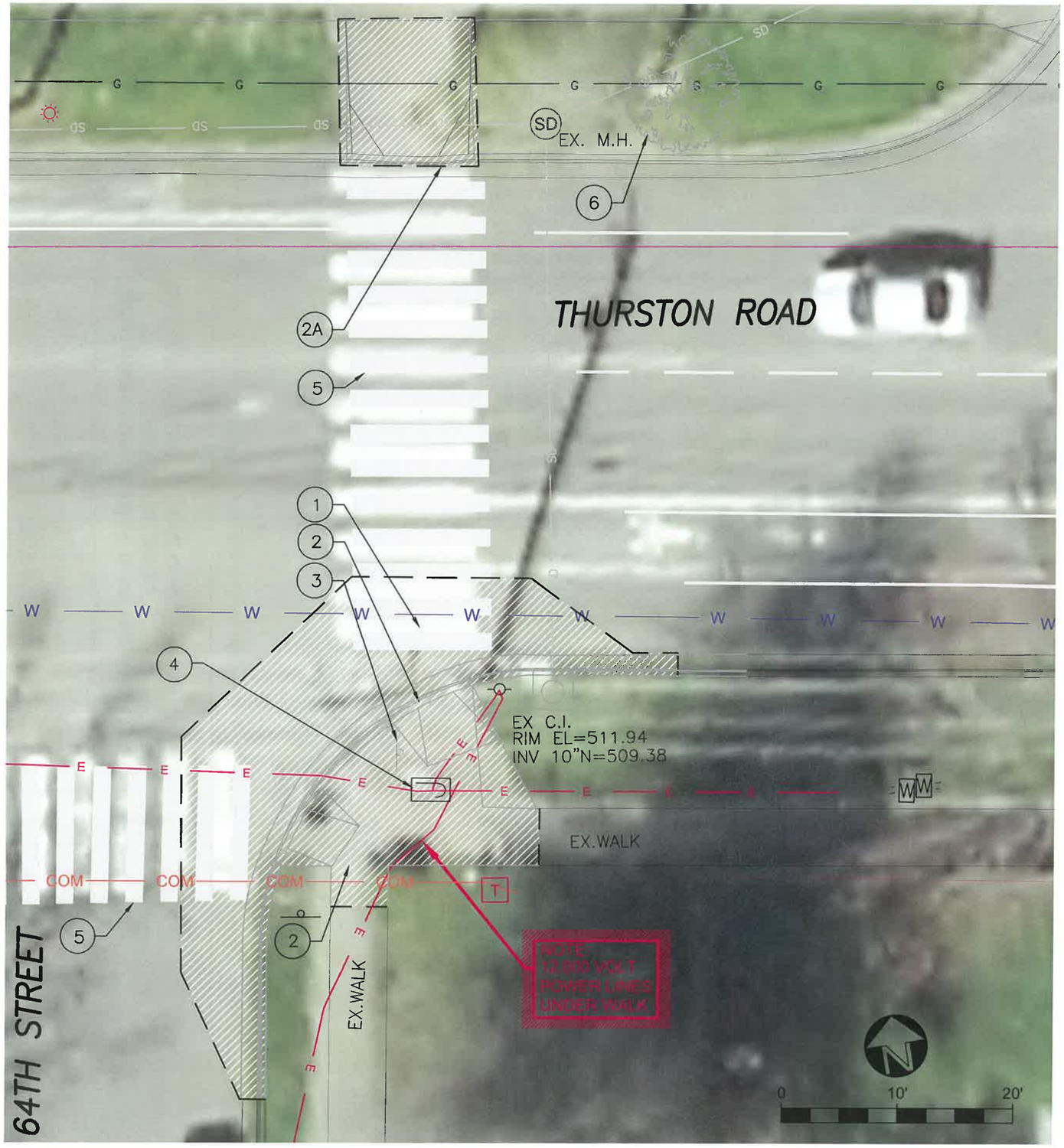

DEMOLITION NOTES:

1. REMOVE EX. A.C.
2. REMOVE EX. CURB & GUTTER AND CONCRETE WALKS. SEE CITY OF SPRINGFIELD STANDARD DETAIL 3–8 FOR CURB, GUTTER AND ASPHALT REMOVAL.
2A. REMOVE EX. CURB AND CONCRETE WALK. SEE CITY OF SPRINGFIELD STANDARD DETAIL 3–8 FOR CURB, GUTTER AND ASPHALT REMOVAL.
3. REMOVE EX. SIGN RETURN TO CITY OPERATIONS DEPT.
4. RELOCATE AND ADJUST J–BOX PER S.U.B. J–BOX RELOCATION MUST BE VERIFIED BY CITY ONCE SIDEWALK REMOVAL IS COMPLETED.
5. REMOVE EXISTING CROSSWALK STRIPING.
6. EXISTING TREE TO BE REMOVED BY CITY.

LEGEND

- NEW CONCRETE
- SAWCUT (LOCATION TBD BY INSPECTORS AND PROJECT MANAGER IN FIELD)

No.	Revision	Date
DRAWN: CJG		

NOTE:

UTILITY LOCATIONS ARE APPROXIMATE
DO NOT
SCALE OR LOCATE UTILITY LINES OR MAINS FROM THESE DRAWINGS
CALL FOR UTILITY LOCATES 811 or (1-800-332-2344)

THE CONTRACTOR SHALL BE RESPONSIBLE FOR DETERMINING UTILITY LOCATIONS PRIOR TO BEGINNING OF CONSTRUCTION.
THESE PLANS MAY NOT SHOW ALL UTILITIES OR THE CORRECT LOCATIONS.

P21149 BIKE/PED SAFETY RRFB/CROSSING CONSTRUCTION (THURSTON RD & 64TH ST RRFB PORTION)

City of Springfield
PUBLIC WORKS / ENGINEERING
225 FIFTH STREET, SPRINGFIELD, OR 97477
PHONE (541) 726-3753 FAX (541) 736-3689
INTERNET www.springfield-or.gov

ENGINEERS STAMP

REGISTERED PROFESSIONAL ENGINEER
54699PE
OREGON
JULY 15, 2003
JEFFREY ALAN PASCHALL

EXPIRATION DATE: 12-31-20

SHEET P3

CONSTRUCTION PLAN

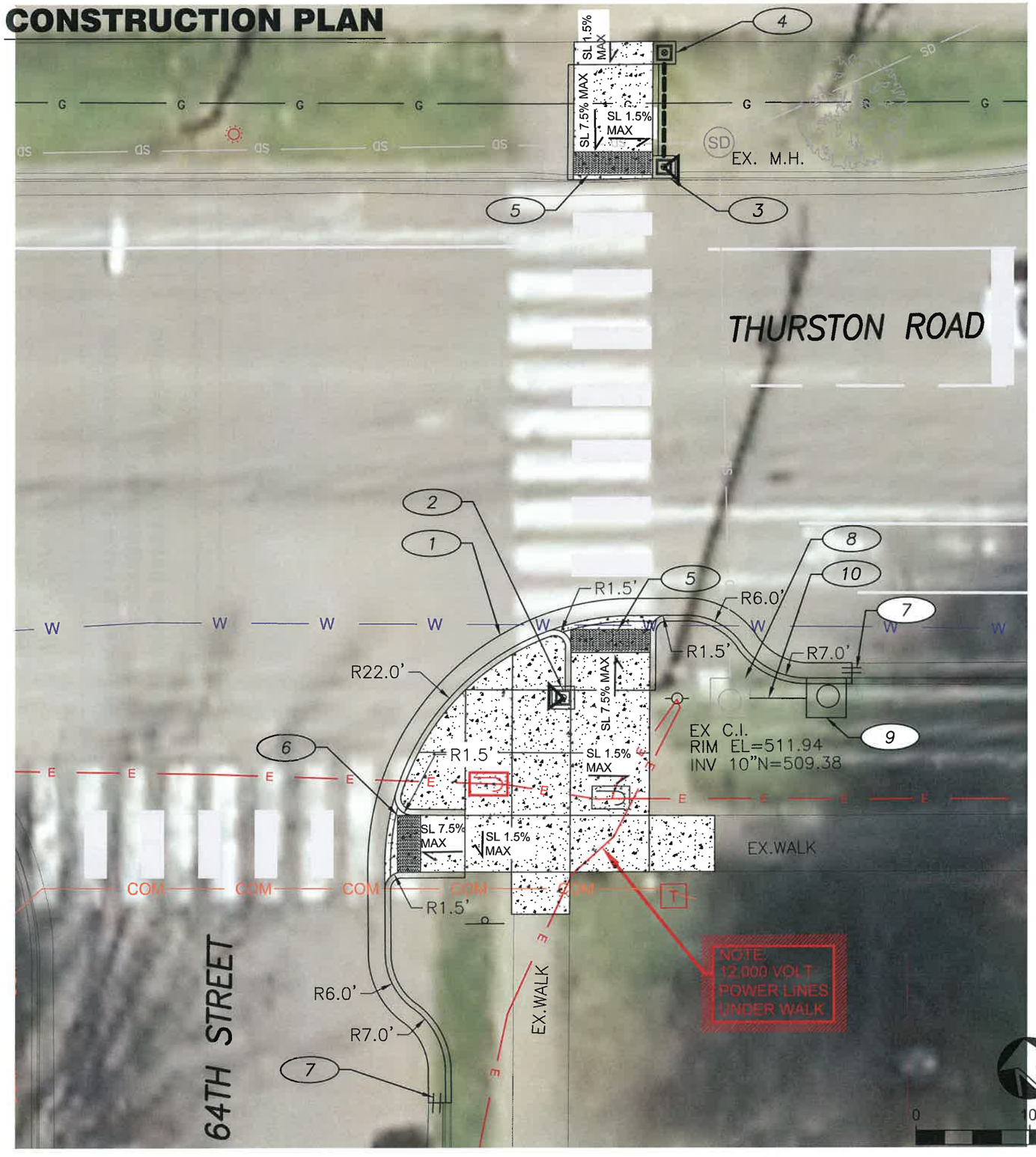

CONSTRUCTION NOTES:

1. CONSTRUCT BULB OUT CONC GUTTERS, ADA RAMPS, AND WALKS. SEE CITY OF SPRINGFIELD STANDARD DETAIL 3–5 FOR CURB AND GUTTER PLACEMENT, AND STANDARD DETAIL 3–12 FOR SIDEWALK PLACEMENT. REPLACE AC PAVEMENT THAT WAS REMOVED ADJACENT TO NEW CONC GUTTERS.
2. CONSTRUCT PEDESTRIAN POLE ASSEMBLY W/ TWO SIDED RRFB.
   INSTALL CONCRETE POLE FOUNDATION AT THE SAME ELEVATION AS TOP OF CURB.
   (SEE DETAIL SHEET D1)
3. CONSTRUCT PEDESTRIAN POLE ASSEMBLY W/ SERVICE PANEL AND TWO SIDED RRFB.
   INSTALL CONCRETE POLE FOUNDATION AT THE SAME ELEVATION AS TOP OF CURB.
   (SEE DETAIL SHEET D3)
4. CONSTRUCT PEDESTRIAN PUSH BUTTON POST (SEE SHEET D2)
5. CONSTRUCT ADA RAMP & GUTTER BAR. 7.5% MAX WALK SLOPE, PLACE 2'x7' TRUNCATED DOME IN LANDING.
6. CONSTRUCT ADA RAMP & GUTTER BAR. 7.5% MAX WALK SLOPE, PLACE 2'x5' TRUNCATED DOME IN LANDING.
7. PLACE (2) #4 REBAR DOWEL 6" INTO EX. GUTTER BAR EA. SIDE.
8. REMOVE C.I, REPLACE W/ 2 1/2A W/ MH FRAME & LID.
   CONNECT EX.10" PIPE N @ INV=509.38
   CONNECT.10" PVC PIPE E @ INV=509.48
9. INSTALL C.I, 2 1/2A W MH FRAME & LID
   CONNECT.10" PVC PIPE W @ INV=509.60.
   SEE STD. DWG 4–9.
10. CONSTRUCT 5LF 10" PVC D3034 SDR–35 PIPE.
    INV E = 509.60
    INV W = 509.48

LEGEND

- RRFB POLE
- NEW CONCRETE
- TRUNCATED DOMES

No.	Revision/Issue	Date
DRAWN: CJG		

NOTE:

UTILITY LOCATIONS ARE APPROXIMATE
DO NOT
SCALE OR LOCATE UTILITY LINES OR MAINS FROM THESE DRAWINGS
CALL FOR UTILITY LOCATES 811 or (1-800-332-2344)

THE CONTRACTOR SHALL BE RESPONSIBLE FOR DETERMINING UTILITY LOCATIONS PRIOR TO BEGINNING OF CONSTRUCTION. THESE PLANS MAY NOT SHOW ALL UTILITIES OR THE CORRECT LOCATIONS.

P21149 BIKE/PED SAFETY RRFB/CROSSING CONSTRUCTION (THURSTON RD & 64TH ST RRFB PORTION)

City of Springfield

PUBLIC WORKS / ENGINEERING
225 FIFTH STREET SPRINGFIELD, OR 97477
PHONE (541) 726-3753 FAX (541) 726-3689
INTERNET www.springfield-or.gov

ENGINEERS STAMP

REGISTERED PROFESSIONAL ENGINEER
54699PE
OREGON
JULY 15, 2003
JEFFREY ALAN PASCHALL
12-31-19

EXPIRATION DATE: 12-31-20

SHEET P4

CURB GRADES PLAN

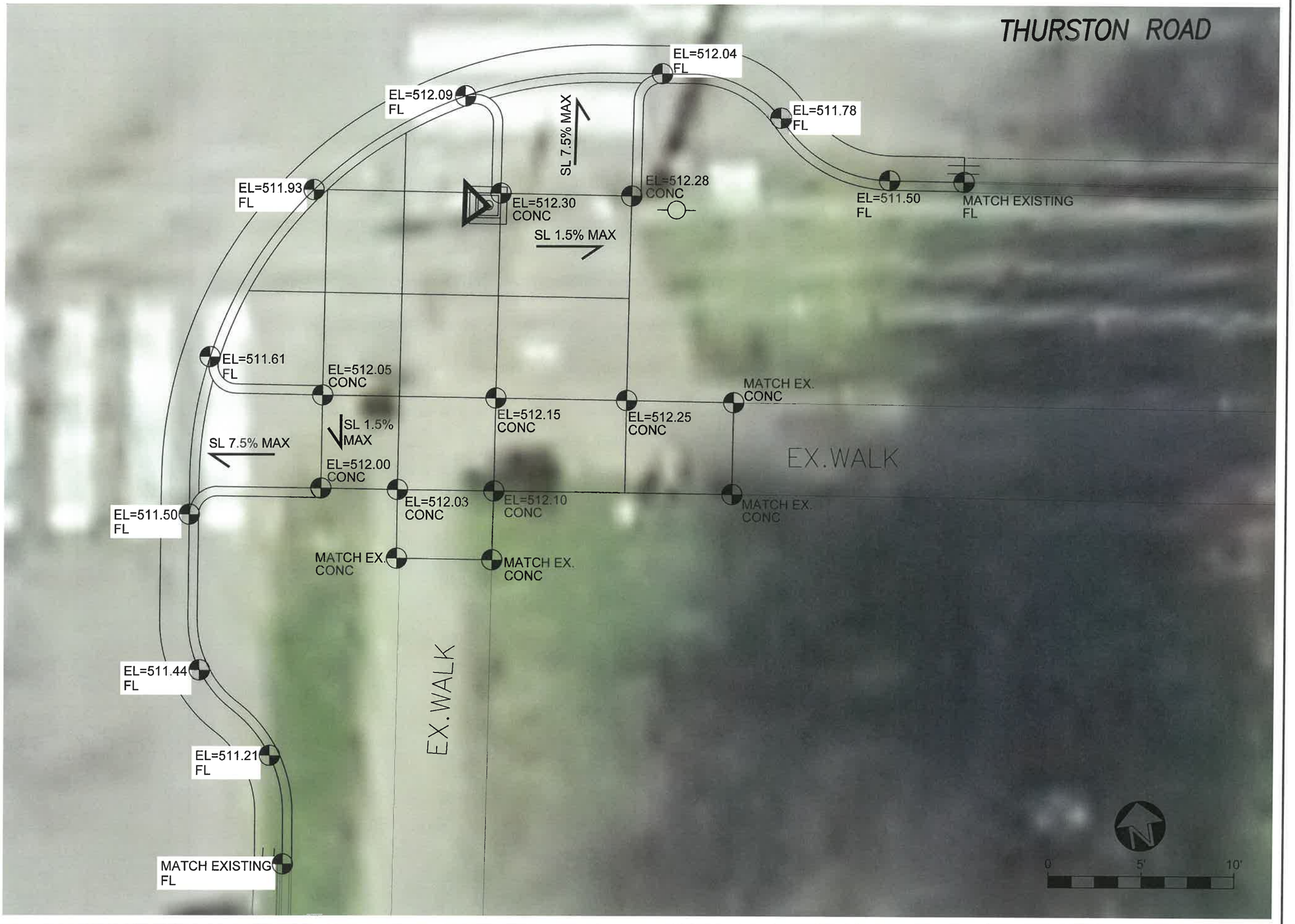

No.	Revision/Issue	Date
DRAWN: CJG		

NOTE:

UTILITY LOCATIONS ARE APPROXIMATE
DO NOT
SCALE OR LOCATE UTILITY LINES OR MAINS FROM THESE DRAWINGS
CALL FOR UTILITY LOCATES
811 or (1-800-332-2344)

THE CONTRACTOR SHALL BE RESPONSIBLE FOR DETERMINING UTILITY LOCATIONS PRIOR TO BEGINNING OF CONSTRUCTION.
THESE PLANS MAY NOT SHOW ALL UTILITIES OR THE CORRECT LOCATIONS.

P21149 BIKE/PED SAFETY RRFB/CROSSING CONSTRUCTION (THURSTON RD & 64TH ST RRFB PORTION)

City of Springfield

PUBLIC WORKS / ENGINEERING
225 FIFTH STREET SPRINGFIELD, OR 97477
PHONE (541) 726-3753 FAX (541) 726-3689
INTERNET www.springfield-or.gov

ENGINEERS STAMP

REGISTERED PROFESSIONAL ENGINEER
54699PE
OREGON
JULY 15, 2003
JEFFREY ALAN PASCHALL
12-15-19

EXPIRATION DATE: 12-31-20

SHEET
P5

ELECTRICAL PLAN

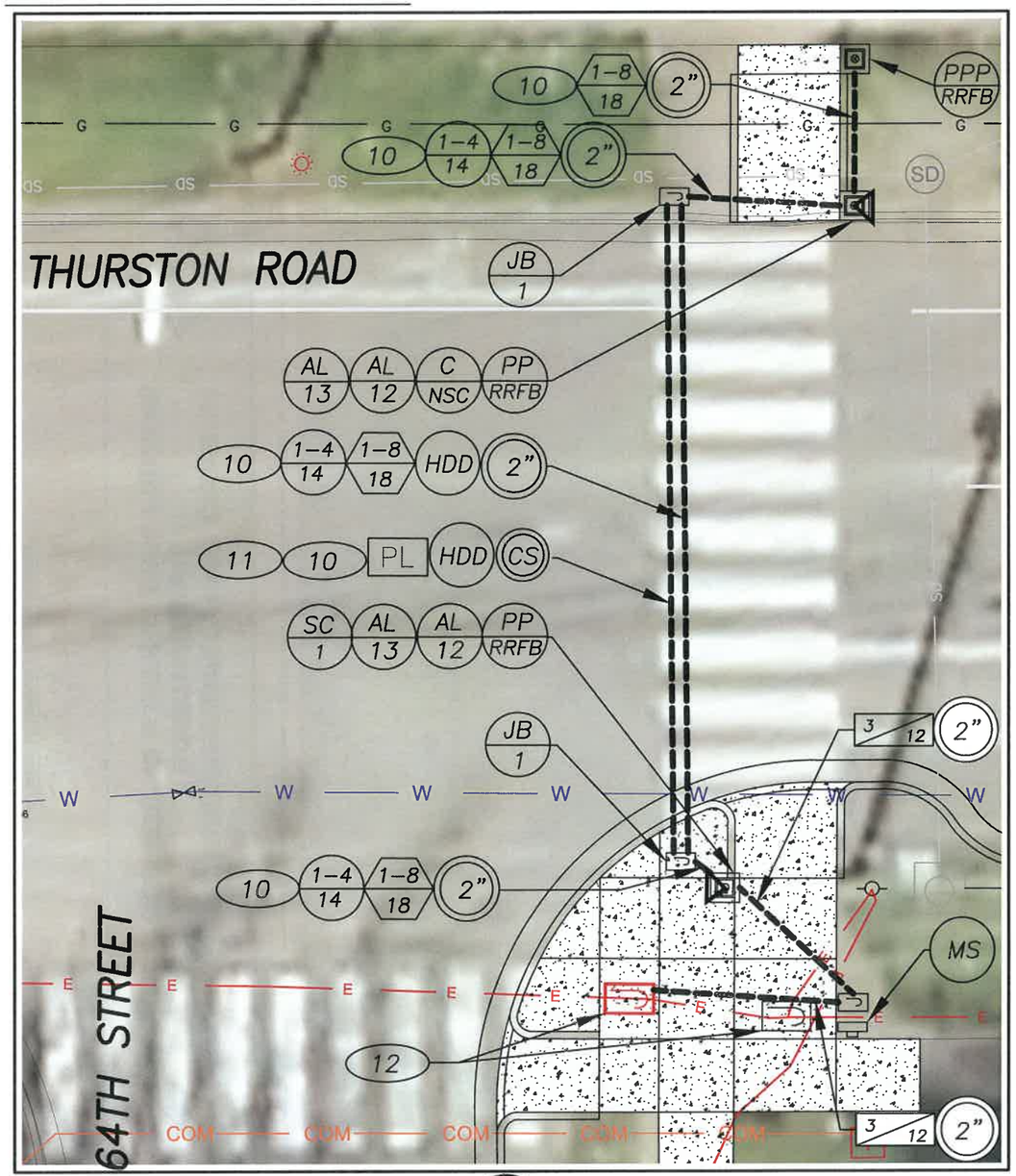

RECTANGULAR RAPID FLASHING BEACON LEGEND

- PP/RRFB — INSTALL PEDESTRIAN SIGNAL PEDESTAL ON FRANGIBLE BASE WITH RECTANGULAR RAPID FLASHING BEACON (RRFB), AND APS PEDESTRIAN PUSH BUTTON AND SIGN. (SEE RRFB DETAIL SHEET).
- C/NSC — INSTALL RRFB NETWORK SYSTEM CONTROLLER (NSC) ELTEC – MODEL SL55.
- N/G — INSTALL (N–NUMBER) NO. (G=AWG WIRE SIZE) TYPE THWN CONDUCTORS WITH GREEN INSULATED GROUND.
- X–N/G — INSTALL (X=NUMBER OF CABLES) WITH (N=NUMBER) AWG NO. (G=AWG WIRE SIZE) TYPE 18AWG BELDON 27601A.
- S — INSTALL (S=SIZE) INCH SCHEDULE 40 PVC ELECTRICAL CONDUIT.
- PL — INSTALL POLY PULL LINE (225 FT./LB. MIN. STRENGTH).
- AL/12 — INSTALL ALUMINUM, 30"x30" W11–2 "PEDESTRIAN CROSSING" WARNING SIGN WITH FLUORESCENT YELLOW, DIAMOND GRADE SHEETING.
- AL/13 — INSTALL ALUMINUM, 24"x12" W16–7P "ARROW" WARNING SIGN WITH FLUORESCENT YELLOW, DIAMOND GRADE SHEETING.
- JB/1 — INSTALL 11"x18"x12" PRECAST POLYMER CONCRETE JUNCTION BOX.
- HDD — INSTALL CONDUIT BY HORIZONTAL DIRECTIONAL DRILLING (OPEN TRENCH NOT ALLOWED). (SEE DETAIL SHEET D4 FOR BORING INFORMATION)
- CS — INSTALL 2" CONDUIT SPARE (CAP ENDS).
- XX/X — EXISTING ITEM (DASHED SYMBOLS) (PROTECT AND MAINTAIN)

  L = LENGTH SHOWN X = NUMBER OF CABLES S = SIZE SHOWN
  T = TYPE SHOWN G = AWG SIZE SHOWN

- MS — INSTALL 120 VOLT SERVICE METER BASE
- SC/1 — INSTALL 6"x8"x12" SERVICE CABINET, 120 VOLT 60 AMP MAIN W/ 15 AMP CIRCUIT BREAKER FOR RRFB. SEE SHEET D1.
- PPP/RRFB — INSTALL PEDESTRIAN PUSH BUTTON POST. SEE SHEET D2.
- X–N/G — INSTALL (X=NUMBER OF CABLES) CONTROL CABLES WITH (N=NUMBER) AWG NO. (G=AWG WIRE SIZE) CONTROL CABLE

CONSTRUCTION NOTES:

10 — INSTALL AND/OR MAINTAIN A NO. 16 AWG THWN STRANDED COPPER WIRE WITH AN ORANGE BASE AND BLUE STRIPE IN ALL CONDUITS AS A LOCATE WIRE.

11 — INSTALL SPARE 2" CONDUIT CROSSING FOR FUTURE USE.

12 — RELOCATE J–BOX TO WEST OUT OF MAIN WALK. SEE ODOT STANDARD DETAIL TM472 FOR J–BOX DETAILS.

No.	Revision/Issue	Date
DRAWN: CJG		

NOTE:

UTILITY LOCATIONS ARE APPROXIMATE
DO NOT
SCALE OR LOCATE UTILITY LINES OR MAINS FROM THESE DRAWINGS
CALL FOR UTILITY LOCATES 811 or (1-800-332-2344)

THE CONTRACTOR SHALL BE RESPONSIBLE FOR DETERMINING UTILITY LOCATIONS PRIOR TO BEGINNING OF CONSTRUCTION. THESE PLANS MAY NOT SHOW ALL UTILITIES OR THE CORRECT LOCATIONS.

P21149 BIKE/PED SAFETY RRFB/CROSSING CONSTRUCTION (THURSTON RD & 64TH ST RRFB PORTION)

City of Springfield

PUBLIC WORKS / ENGINEERING
225 FIFTH STREET, SPRINGFIELD, OR 97477
PHONE (541) 726-3753 FAX (541) 736-3589
INTERNET www.springfield-or.gov

ENGINEERS STAMP

REGISTERED PROFESSIONAL ENGINEER
19,697PE
OREGON
MAY 5, 1998
BRIAN F. BARNETT

EXPIRES 12-31-19

SHEET P6

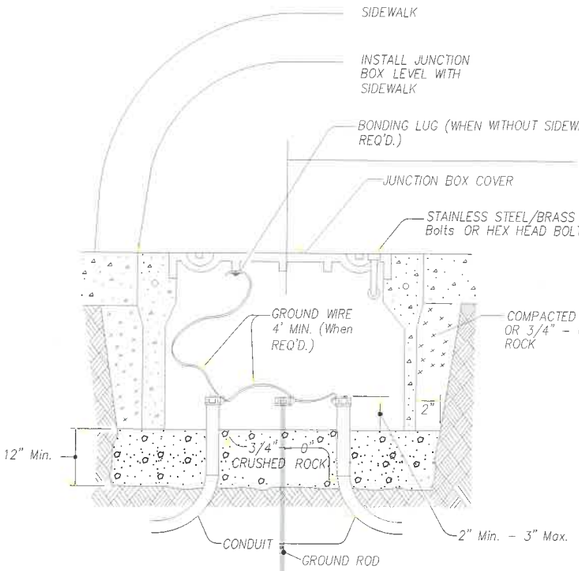

INSTALLATION IN SIDEWALK OR AT BACK OF CURB

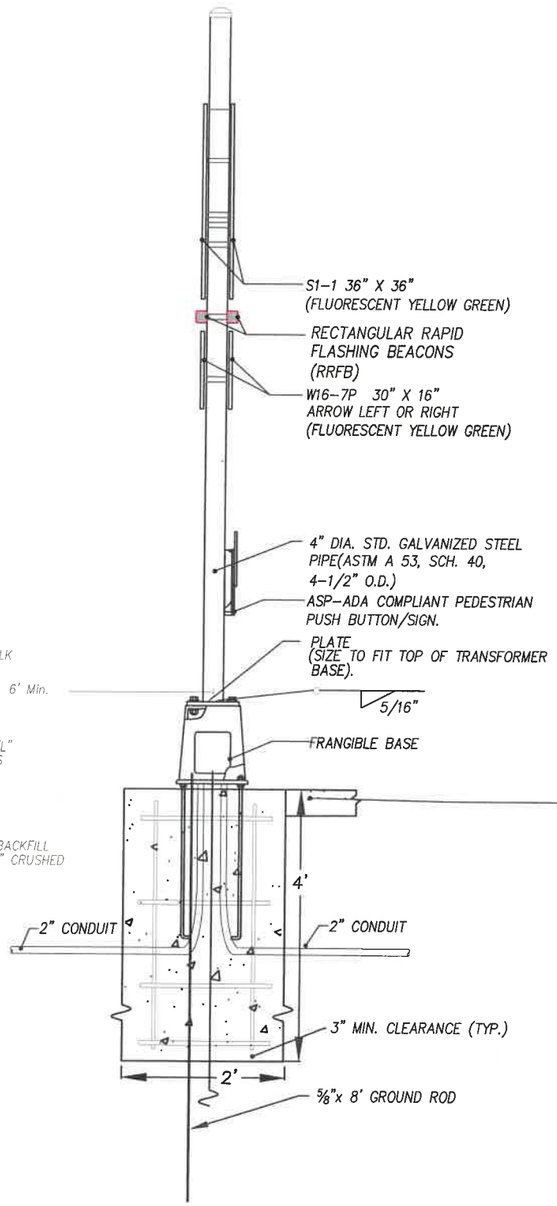

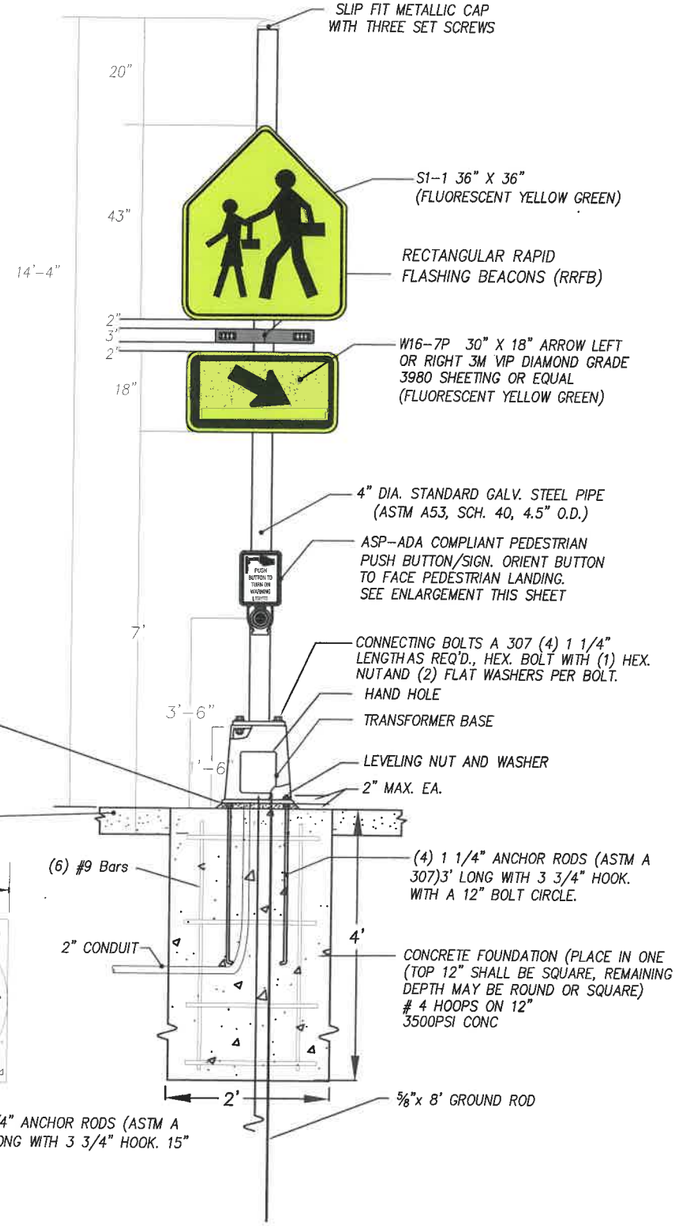

SOUTH PEDESTRIAN POLE - RRFB STANDARD

No.	Revision/Issue	Date
DRAWN: CJG		

NOTE:

UTILITY LOCATIONS ARE APPROXIMATE
DO NOT
SCALE OR LOCATE UTILITY LINES OR MAINS FROM THESE DRAWINGS
CALL FOR UTILITY LOCATES
811 or (1-800-332-2344)

THE CONTRACTOR SHALL BE RESPONSIBLE FOR DETERMINING UTILITY LOCATIONS PRIOR TO BEGINNING OF CONSTRUCTION.
THESE PLANS MAY NOT SHOW ALL UTILITIES OR THE CORRECT LOCATIONS.

P21149 BIKE/PED SAFETY RRFB/CROSSING CONSTRUCTION (THURSTON RD & 64TH ST RRFB PORTION)

City of Springfield

PUBLIC WORKS / ENGINEERING
225 FIFTH STREET, SPRINGFIELD, OR 97477
PHONE (541) 726-3753 FAX (541) 736-3689
INTERNET www.springfield-or.gov

ENGINEERS STAMP

REGISTERED PROFESSIONAL ENGINEER
19697PE
OREGON
MAY 5, 1998
BRIAN F. BARNETT

EXPIRES 12-31-19

SHEET

D1

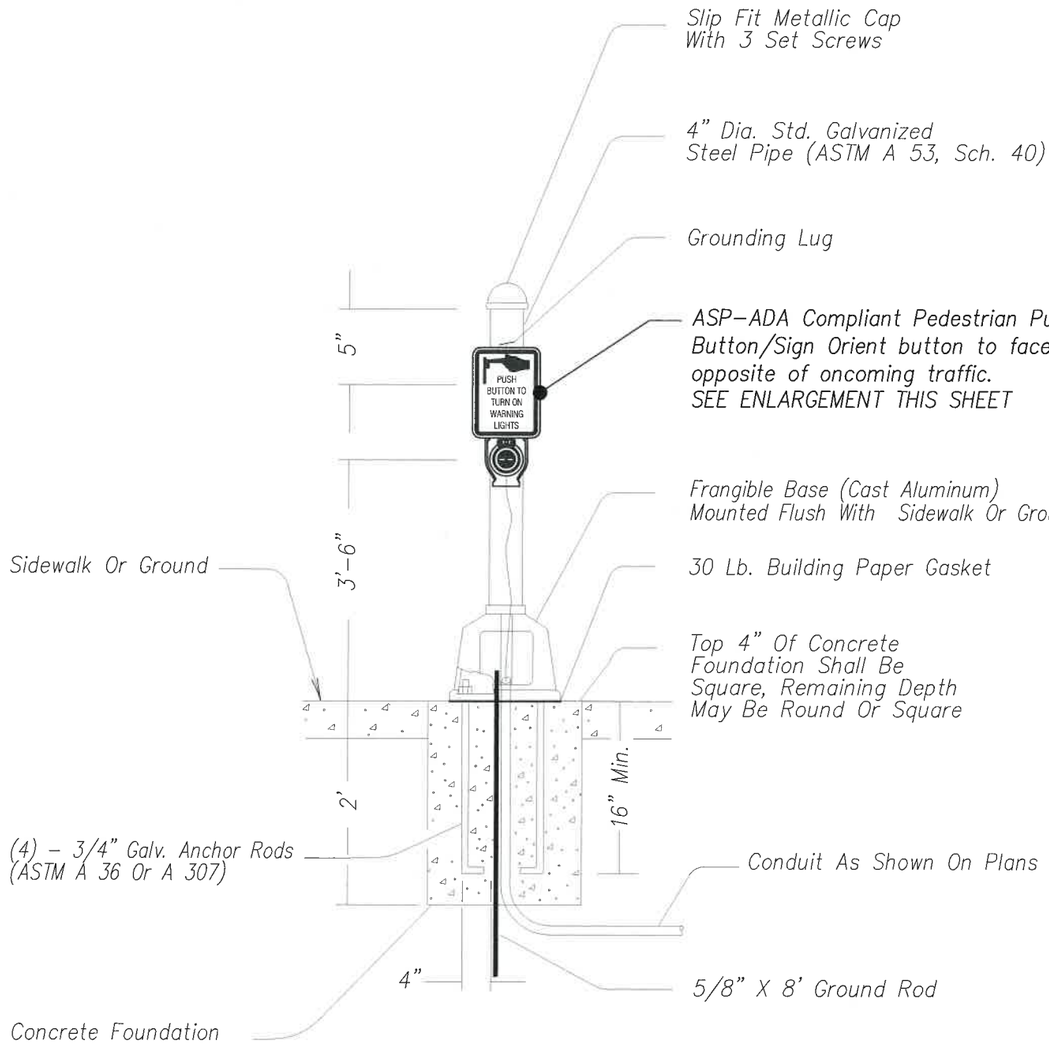

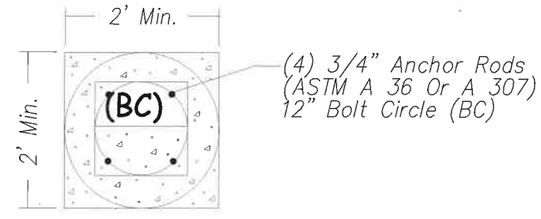

PEDESTRIAN PUSH BUTTON POST

No.	Revision/Issue	Date
DRAWN: CJG		

NOTE:

UTILITY LOCATIONS ARE APPROXIMATE
DO NOT
SCALE OR LOCATE UTILITY LINES OR MAINS
FROM THESE DRAWINGS
CALL FOR UTILITY LOCATES
811 or (1-800-332-2344)

THE CONTRACTOR SHALL BE RESPONSIBLE FOR DETERMINING UTILITY LOCATIONS PRIOR TO BEGINNING OF CONSTRUCTION.
THESE PLANS MAY NOT SHOW ALL UTILITIES OR THE CORRECT LOCATIONS.

P21149 BIKE/PED SAFETY RRFB/CROSSING CONSTRUCTION
(THURSTON RD & 64TH ST RRFB PORTION)

City of Springfield

PUBLIC WORKS / ENGINEERING
225 FIFTH STREET, SPRINGFIELD, OR 97477
PHONE (541) 726-3753 FAX (541) 736-3689
INTERNET www.springfield-or.gov

ENGINEERS STAMP

REGISTERED PROFESSIONAL ENGINEER
19,697PE
OREGON
MAY 5, 1998
BRIAN F. BARNETT

EXPIRES 12-31-19

SHEET
D2

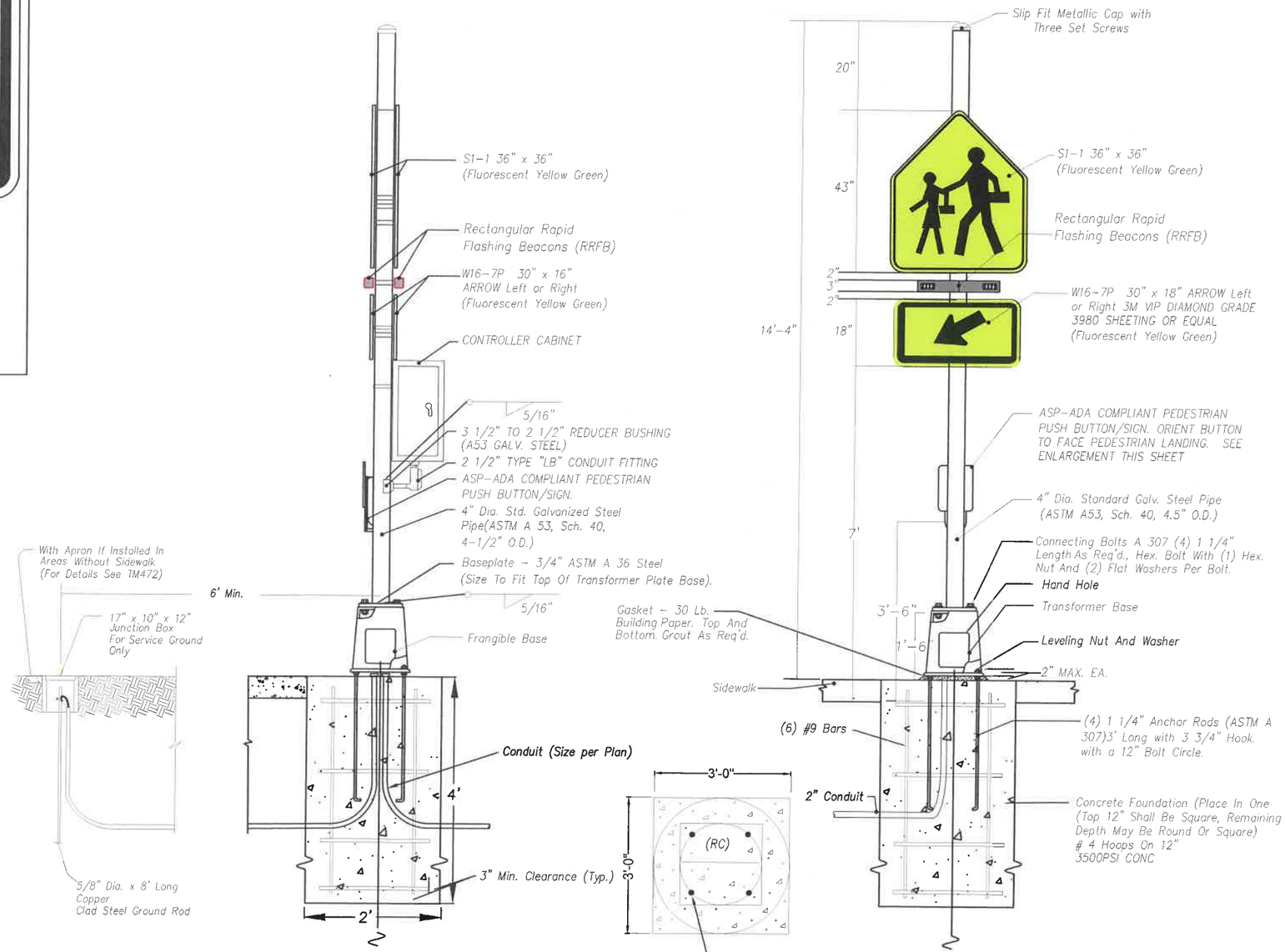

NORTH PEDESTRIAN POLE - RRFB STANDARD

No.	Revision/Issue	Date
DRAWN: CJG		

NOTE:

UTILITY LOCATIONS ARE APPROXIMATE
DO NOT
SCALE OR LOCATE UTILITY LINES OR MAINS FROM THESE DRAWINGS
CALL FOR UTILITY LOCATES
811 or (1-800-332-2344)

THE CONTRACTOR SHALL BE RESPONSIBLE FOR DETERMINING UTILITY LOCATIONS PRIOR TO BEGINNING OF CONSTRUCTION. THESE PLANS MAY NOT SHOW ALL UTILITIES OR THE CORRECT LOCATIONS.

P21149 BIKE/PED SAFETY RRFB/CROSSING CONSTRUCTION
(THURSTON RD & 64TH ST RRFB PORTION)

City of Springfield
PUBLIC WORKS / ENGINEERING
225 FIFTH STREET, SPRINGFIELD, OR 97477
PHONE (541) 726-3753 FAX (541) 736-3689
INTERNET www.springfield-or.gov

ENGINEERS STAMP

REGISTERED PROFESSIONAL ENGINEER
19,697PE
OREGON
MAY 5, 1998
BRIAN F. BARNETT

EXPIRES 12-31-19

SHEET
D3

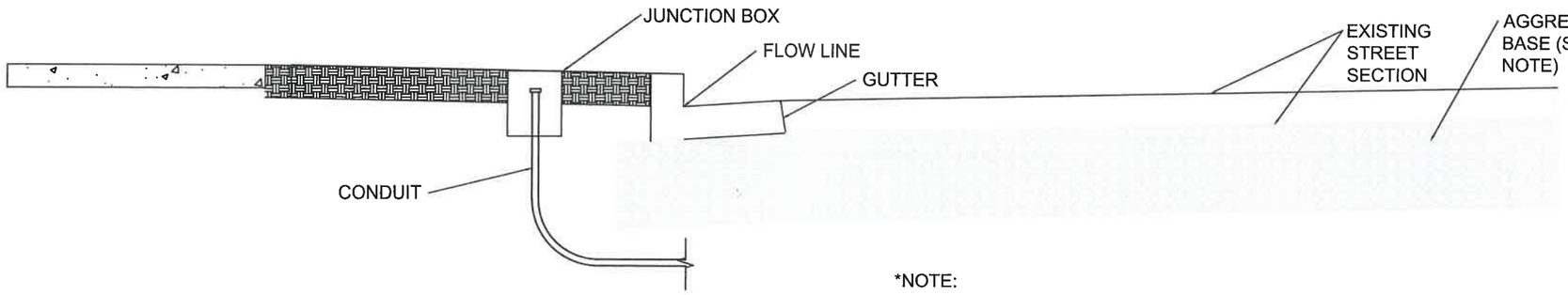

*NOTE:

1) THE CONTRACTOR IS SOLELY RESPONSIBLE FOR ANY DAMAGE TO THE EXISTING ROADWAY AND UTILITIES BY BORING ACTIVITIES. REPAIRS ASSOCIATED TO DAMAGE CAUSED BY BORING ACTIVITIES SHALL BE REPAIRED AT THE CONTRACTORS EXPENSE.

2) NOTIFY ENGINEER OF PROPOSED DIRECTIONAL BORING PATH PRIOR TO PUSH.

DIRECTIONAL BORING DETAIL NORTH SIDE

(DIAGRAMATIC ONLY–NOT TO SCALE)

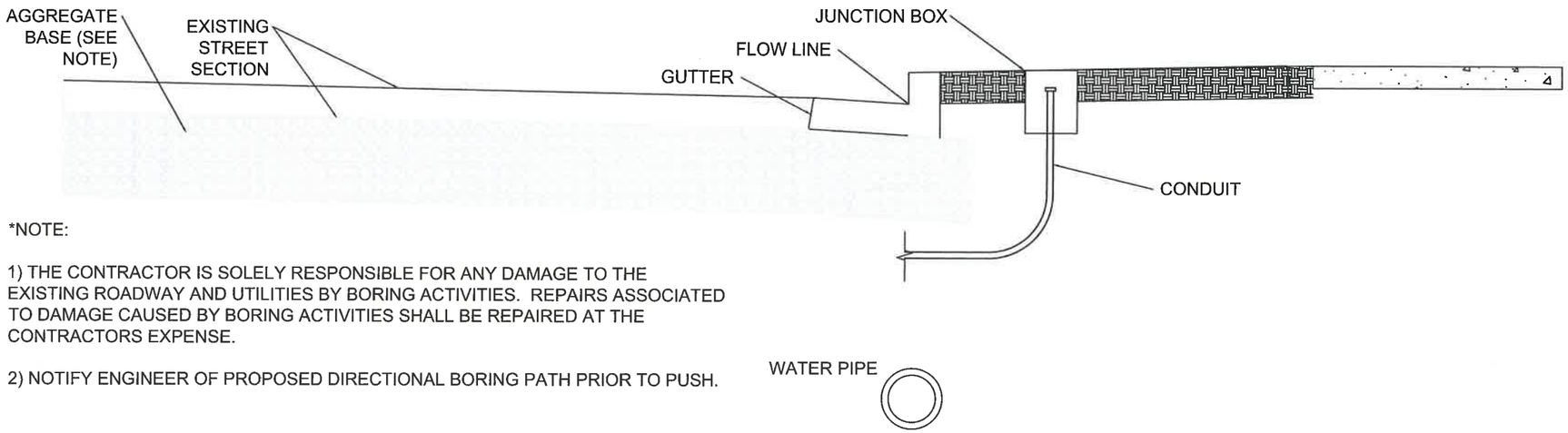

*NOTE:

1) THE CONTRACTOR IS SOLELY RESPONSIBLE FOR ANY DAMAGE TO THE EXISTING ROADWAY AND UTILITIES BY BORING ACTIVITIES. REPAIRS ASSOCIATED TO DAMAGE CAUSED BY BORING ACTIVITIES SHALL BE REPAIRED AT THE CONTRACTORS EXPENSE.

2) NOTIFY ENGINEER OF PROPOSED DIRECTIONAL BORING PATH PRIOR TO PUSH.

DIRECTIONAL BORING DETAIL SOUTH SIDE

(DIAGRAMATIC ONLY–NOT TO SCALE)

No.	Revision/Issue	Date
DRAWN: CJG		

NOTE:

UTILITY LOCATIONS ARE APPROXIMATE
DO NOT
SCALE OR LOCATE UTILITY LINES OR MAINS FROM THESE DRAWINGS
CALL FOR UTILITY LOCATES 811 or (1-800-332-2344)

THE CONTRACTOR SHALL BE RESPONSIBLE FOR DETERMINING UTILITY LOCATIONS PRIOR TO BEGINNING OF CONSTRUCTION. THESE PLANS MAY NOT SHOW ALL UTILITIES OR THE CORRECT LOCATIONS.

P21149 BIKE/PED SAFETY RRFB/CROSSING CONSTRUCTION (THURSTON RD & 64TH ST RRFB PORTION)

City of Springfield
PUBLIC WORKS / ENGINEERING
225 FIFTH STREET, SPRINGFIELD, OR 97477
PHONE (541) 726-3753 FAX (541) 736-3688
INTERNET www.springfield-or.gov

ENGINEERS STAMP

REGISTERED PROFESSIONAL ENGINEER
19,697PE
OREGON
MAY 5, 1998
BRIAN F. BARNETT
15 FEB 19

EXPIRES 12-31-19

SHEET

D4

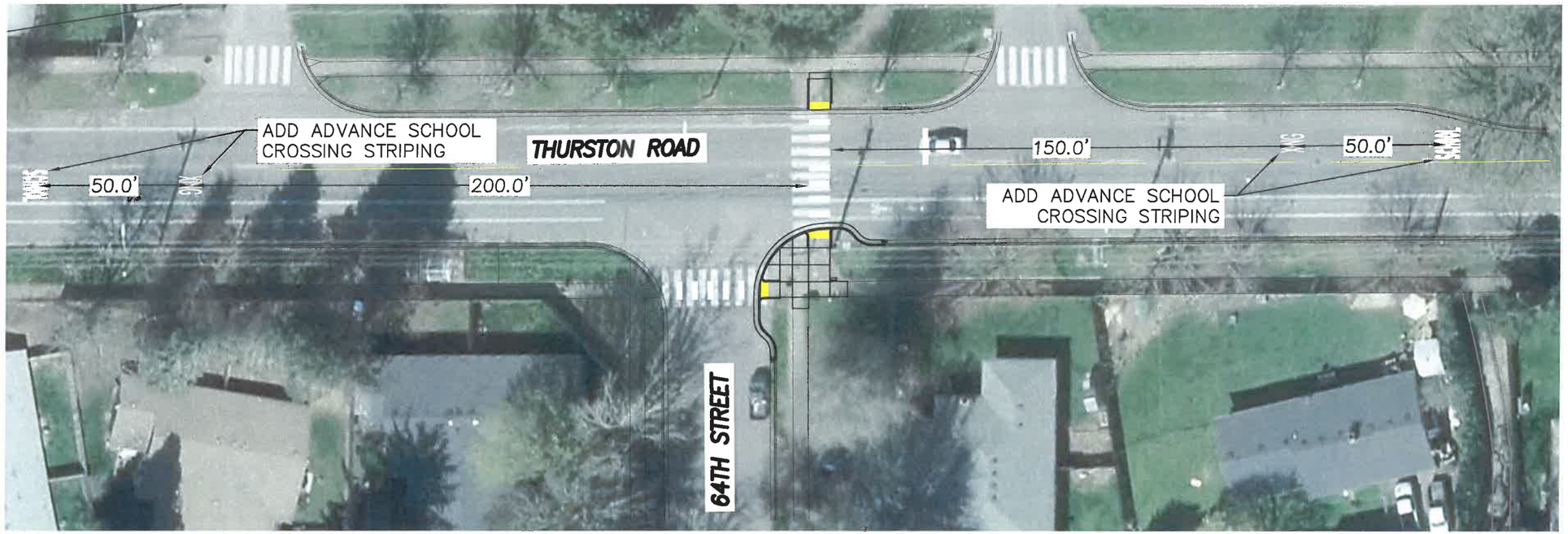

ADVANCE CROSSING WARNING DETAIL

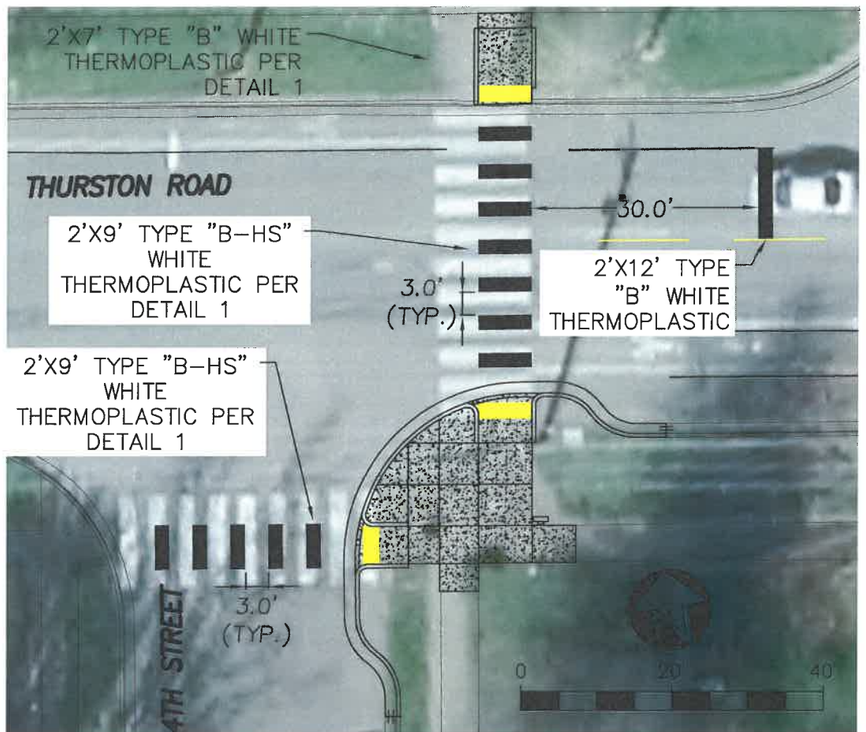

STRIPING DETAIL

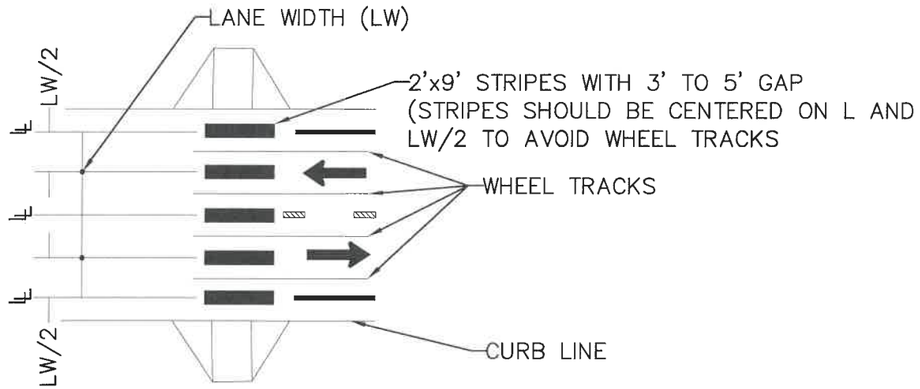

DETAIL 1-STAGGERED CONTINENTAL LAYOUT

GENERAL NOTE:
1. INSTALL CROSSWALK BARS SUCH THAT THE THROAT OF THE ADA RAMP IS ENTIRELY WITHIN CROSSWALK MARKINGS, OR 5' BACK OF EXTENDED FOG LINE, EDGE OF PAVEMENT, OR CURB FACE.

No	Revision/Issue	Date
DRAWN: CJG		

NOTE:

UTILITY LOCATIONS ARE APPROXIMATE
DO NOT
SCALE OR LOCATE UTILITY LINES OR MAINS FROM THESE DRAWINGS
CALL FOR UTILITY LOCATES 811 or (1-800-332-2344)

THE CONTRACTOR SHALL BE RESPONSIBLE FOR DETERMINING UTILITY LOCATIONS PRIOR TO BEGINNING OF CONSTRUCTION. THESE PLANS MAY NOT SHOW ALL UTILITIES OR THE CORRECT LOCATIONS.

P21149 BIKE/PED SAFETY RRFB/CROSSING CONSTRUCTION (THURSTON RD & 64TH ST RRFB PORTION)

City of Springfield

PUBLIC WORKS / ENGINEERING
225 FIFTH STREET, SPRINGFIELD, OR 97477
PHONE (541) 726-3753 FAX (541) 736-3689
INTERNET www.springfield-or.gov

ENGINEERS STAMP

REGISTERED PROFESSIONAL ENGINEER
19,697PE
OREGON
MAY 5, 1998
BRIAN F. BARNETT
21 Nov 19

EXPIRES 12-31-19

SHEET
D5

NOTES:

1. PLACE INLET/CATCH BASIN PROTECTION AT EXISTING FIXTURES (SEE DETAIL ON SHEET E2).

GENERAL NOTES:

1. CONCRETE WASHOUTS ARE NOT PROVIDED ON THIS PROJECT
2. SAW CUTTING SLURRY IS TO BE VACUUMED
3. ANY AREAS OF EXPOSED SOILS. INCLUDING ROADWAY EMBANKMENTS, THAT WILL NOT BE DISTURBED FOR TWO DAYS DURING THE WET SEASON (OCTOBER 1 TO APRIL 30) OR SEVEN DAYS DURING THE DRY SEASON (MAY 1 TO SEPTEMBER 30) SHALL BE IMMEDIATELY STABILIZED WITH AN APPROVED ESC METHOD (SEEDING & MULCHING WITH STRAW, BARK, COMPOST, OR PLASTIC COVERING, ETC.).

EROSION CONTROL STANDARD NOTES:

A. Approval of this Erosion and Sedimentation Control Plan (ESCP) does not constitute an approval of permanent road or drainage design (e.g., size and location of roads, pipes, restrictors, channels, retention facilities, utilities, etc.).

B. Approval of this ESCP does not relieve the permit holder and or the contractor from all other permitting requirements. Prior to beginning construction activities, all other necessary approvals shall be obtained.

C. An inspection of the erosion control measures by City LDAP staff is required prior to any ground disturbance on the site.

D. The erosion and sediment control measures shown on the plan are the minimum requirements for anticipated site conditions. During the construction period, these measures shall be upgraded as needed for unexpected storm events and to ensure that sediment and sediment-laden water does not leave the site.

E. The implementation of the ESCP and the construction, maintenance, replacement, and upgrading of the erosion and sediment control measures is the responsibility of the permit holder and or the contractor until all construction is completed and accepted by the City and vegetation/landscaping is established per the required warranty period.

F. In the event the ESC facilities identified on the ESCP are not functioning properly, the contractor is responsible for immediately implementing changes to the ESCP as directed by the ESCP engineer or his inspector. The engineer, his inspector or the City may stop all construction activity on site until the erosion problem is corrected and all ESC facilities are functioning properly. If the contractor does not immediately implement changes to the ESCP identified by the ESCP engineer or his inspector, the City may implement the necessary changes and require payment from the contractor prior to project acceptance by the City.

G. The boundaries of the clearing limits shown on this plan shall be clearly flagged in the field by the engineer prior to construction. During the construction period, no disturbance beyond the flagged clearing limits shall be permitted. The flagging shall be maintained by the permit holder and or the contractor for the duration of construction.

H. The erosion and sediment control measures on active sites shall be inspected and maintained daily and within the 24 hours after any storm event of greater than 0.5 inches of rain per 24 hour period. Measures shall be inspected by the permit holder and or the contractor after each rainfall and at least daily during prolonged rainfall. Any required repairs or adjustments shall be made immediately. The erosion and sediment control measures on inactive sites shall be inspected a minimum of once every two (2) weeks or within 48 hours following a storm event. Written records shall be kept of weekly reviews of the ESC facilities during the wet season (October 1 to April 30) and of monthly reviews during the dry season (May1 to September 30).

I. All erosion and sediment control measures shall be protected from damage at all times. Control measures shall remain in place until permanent or temporary re-vegetation has been stabilized. Any measure that is damaged or destroyed shall be repaired or replaced immediately.

J. Any areas of exposed soils, including roadway embankments, that will not be disturbed for two days during the wet season (October 1 to April 30) or seven days during the dry season (May 1 to September 30) shall be immediately stabilized with an approved ESC method (seeding & mulching with straw, bark, compost, or plastic covering, etc.).

K. A supply of materials necessary to meet compliance and implement the LDAP or other best management erosion practices under all weather conditions shall be maintained at all times on the construction site.

L. No hazardous substances, such as paints, thinners, fuels and other chemicals shall be released onto the site, adjacent properties, or into water features, the City's storm water system, or related natural resources.

M. Street sweeping shall be performed as needed or when directed by the City inspector to ensure public right-of-ways are kept clean and free of debris. Street flushing is prohibited.

N. When trucking saturated soils from the site, either water-tight trucks shall be used or loads shall be drained on site until dripping has been reduced to no more than one gallon per hour. Sediment laden water will not be allowed to enter the storm water system

O. Extracted ground water from excavated trenches shall be disposed of in a suitable manner without damage to adjacent property, public storm water system, water features, and related natural resources. Approval of a dewatering system does not guarantee that it will meet compliance or be acceptable for use in all situations. Modifications to the dewatering system will be required if compliance can not be met. At no time will sediment laden water be allowed to leave the construction site.

P. At no time shall more than one foot of sediment be allowed to accumulate within a catch basin. All catch basins and conveyance lines shall be cleaned prior to paving. The cleaning operation shall not flush sediment laden water into the downstream system.

Q. Any required stabilized construction entrances and roads shall be installed at the beginning of construction and maintained for the duration of the project. Additional measures, such as wash pads, may be required to ensure that all paved areas are kept clean for the duration of the project.

R. Any permanent flow control facility used as a temporary settling basin shall be modified with the necessary erosion control measures and shall provide adequate storage capacity.

S. Where straw mulch for temporary erosion control is required, it shall be applied at a minimum thickness of two to three inches.

T. In preparation of the wet season, all disturbed areas shall be reviewed to identify which ones can be seeded in preparation for the winter rains. A sketch map of those areas to be seeded and those areas to remain uncovered shall be submitted to the City by September 15. The City can require seeding of additional areas in order to protect surface waters, adjacent properties, or drainage facilities. Disturbed areas identified for seeding shall be seeded prior to the beginning of the wet season (October 1).

No.	Revision/Issue	Date
DRAWN: CJG		

NOTE:

UTILITY LOCATIONS ARE APPROXIMATE
DO NOT
SCALE OR LOCATE UTILITY LINES OR MAINS FROM THESE DRAWINGS
CALL FOR UTILITY LOCATES 811 or (1-800-332-2344)

THE CONTRACTOR SHALL BE RESPONSIBLE FOR DETERMINING UTILITY LOCATIONS PRIOR TO BEGINNING OF CONSTRUCTION. THESE PLANS MAY NOT SHOW ALL UTILITIES OR THE CORRECT LOCATIONS.

P21149 BIKE/PED SAFETY RRFB/CROSSING CONSTRUCTION (THURSTON RD & 64TH ST RRFB PORTION)

City of Springfield

DEVELOPEMENT & PUBLIC WORKS / ENGINEERING
225 FIFTH STREET, SPRINGFIELD, OR 97477
PHONE (541) 726-3753 FAX (541) 736-1021
INTERNET www.springfield-or.gov

ENGINEERS STAMP

REGISTERED PROFESSIONAL ENGINEER
54699PE
OREGON
JULY 15, 2003
JEFFREY ALAN PASCHALL

EXPIRATION DATE: 12-31-20

SHEET
E1

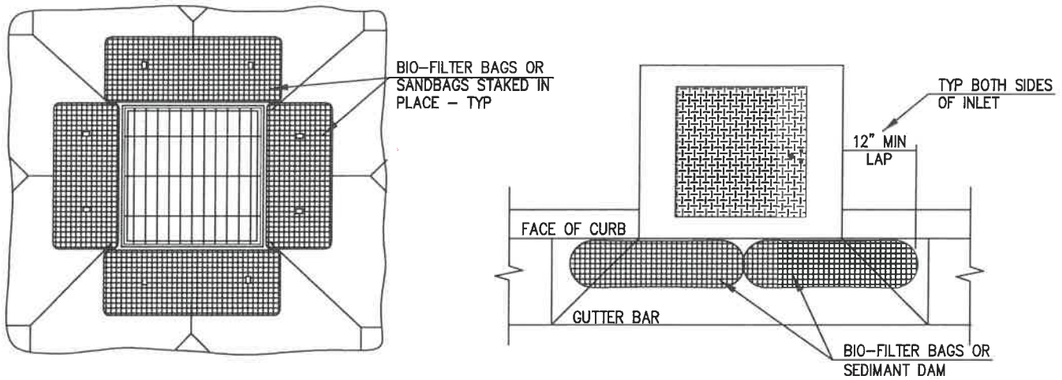

NOTES
1. PRIOR TO 1st PAVEMENT LIFT, REMOVE BIO-BAG/SANDBAG BARRIERS AND INSTALL BASIN INSERT BAG OR CURB INLET SEDIMENT DAM AT ALL INLET STRUCTURES.

1 DRAINAGE INLET STRUCTURE PROTECTION

NO SCALE

INLET PROTECTION

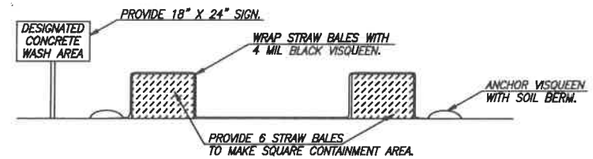

CONCRETE WASH AREA DETAIL

N.T.S.

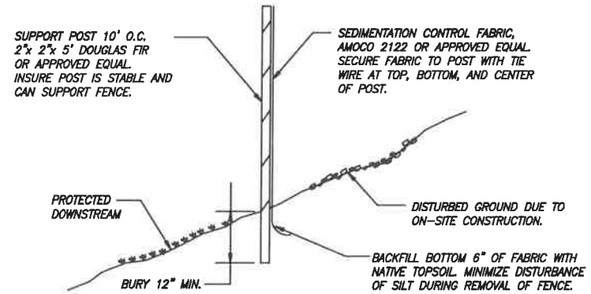

SEDIMENTATION CONTROL FABRIC TYPE SILT FENCE

N.T.S.

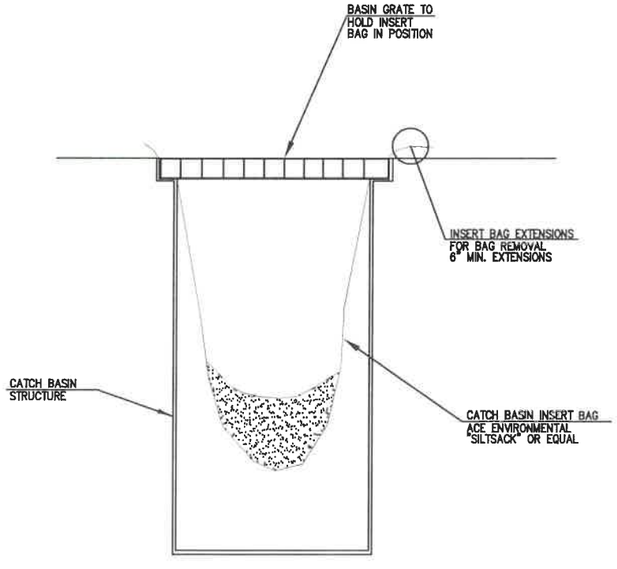

1 CATCH BASIN INSERT BAG

NO SCALE

No.	Revision/Issue	Date
DRAWN: CJG		

NOTE:

UTILITY LOCATIONS ARE APPROXIMATE
DO NOT
SCALE OR LOCATE UTILITY LINES OR MAINS FROM THESE DRAWINGS
CALL FOR UTILITY LOCATES
811 or (1-800-332-2344)

THE CONTRACTOR SHALL BE RESPONSIBLE FOR DETERMINING UTILITY LOCATIONS PRIOR TO BEGINNING OF CONSTRUCTION.
THESE PLANS MAY NOT SHOW ALL UTILITIES OR THE CORRECT LOCATIONS.

P21149 BIKE/PED SAFETY RRFB/CROSSING CONSTRUCTION (THURSTON RD & 64TH ST RRFB PORTION)

City of Springfield
DEVELOPEMENT & PUBLIC WORKS / ENGINEERING
225 FIFTH STREET, SPRINGFIELD, OR 97477
PHONE (541) 726-3753 FAX (541) 736-1021
INTERNET www.springfield-or.gov

ENGINEERS STAMP

REGISTERED PROFESSIONAL ENGINEER
54699PE
OREGON
JULY 15, 2003
JEFFREY ALAN PASCHALL

EXPIRATION DATE: 12-31-20

SHEET
E2

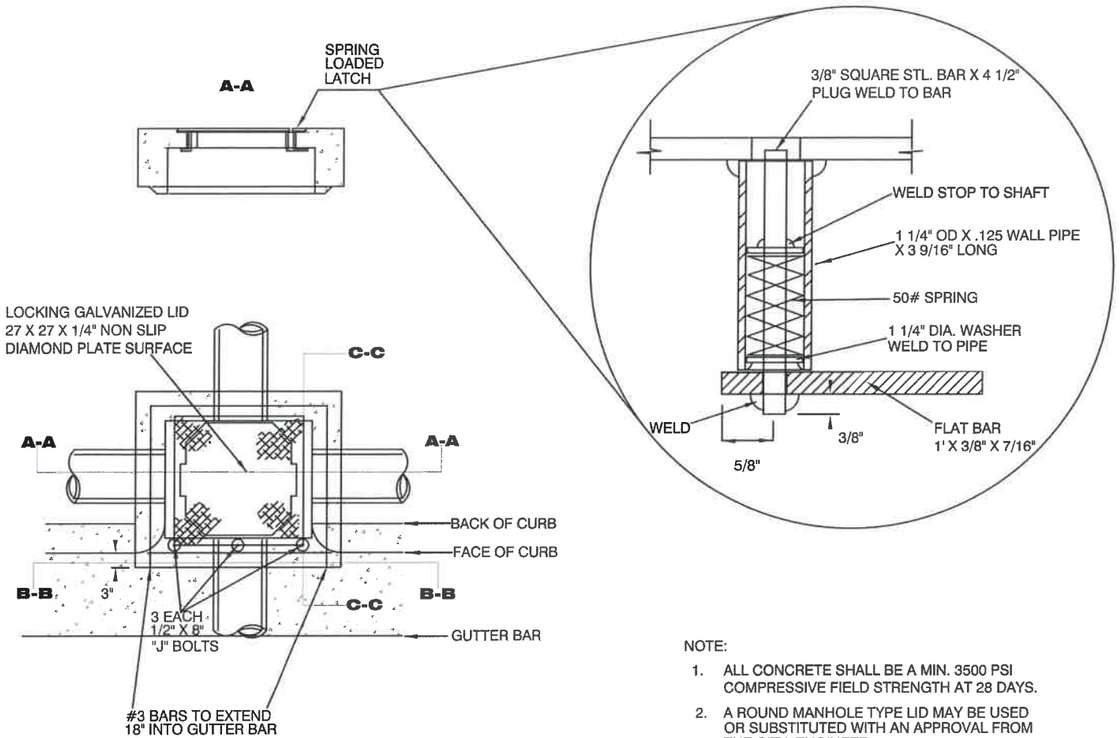

NOTE:

1. ALL CONCRETE SHALL BE A MIN. 3500 PSI COMPRESSIVE FIELD STRENGTH AT 28 DAYS.
2. A ROUND MANHOLE TYPE LID MAY BE USED OR SUBSTITUTED WITH AN APPROVAL FROM THE CITY ENGINEER.
3. BASE MAY BE PRECAST OR CAST IN PLACE.

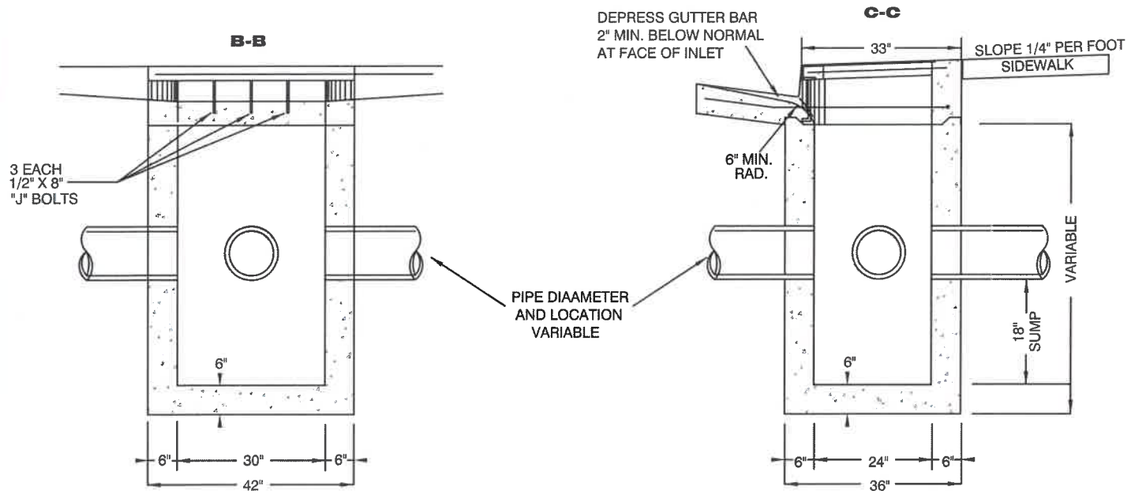

NO	REVISION	DATE	BY	APPR.
1	Updated Drawing	6/08	JLP	

CITY OF SPRINGFIELD
SPRINGFIELD
DEPT. OF PUBLIC WORKS

CURB INLET CATCH BASIN TYPE 2 1/2A

Jeff Paschall City Engineer 2016

STANDARD DRAWING 4-9

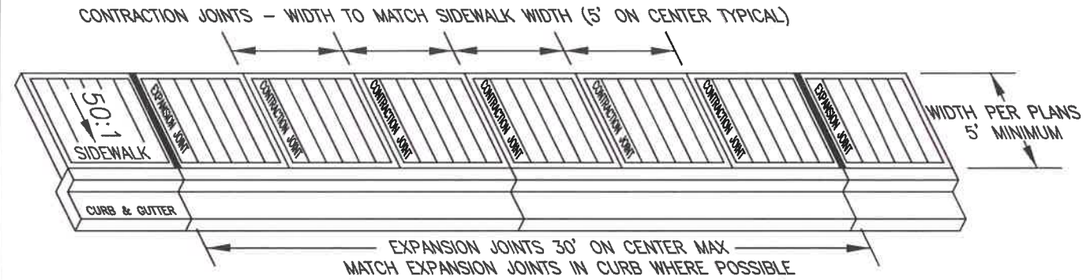

CURBSIDE SIDEWALK

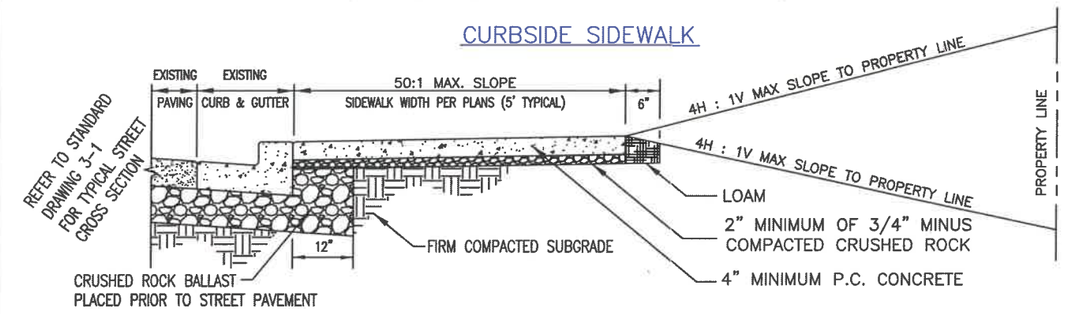

SETBACK SIDEWALK

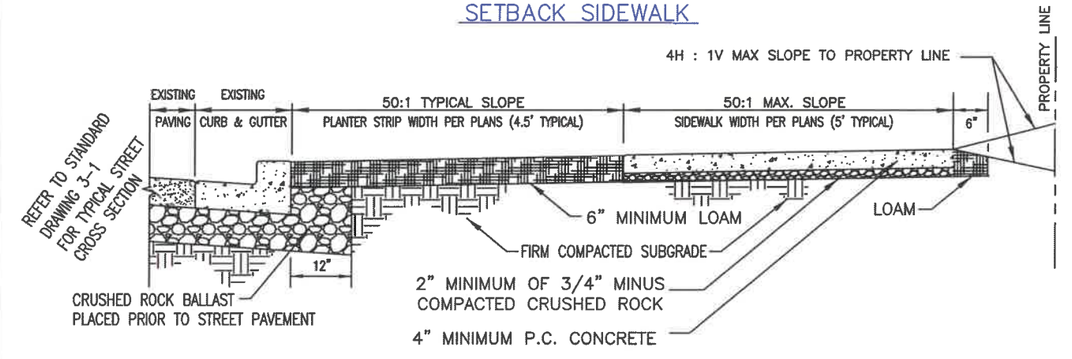

NOTES

* NO ABOVEGROUND FACILITIES (FIRE HYDRANTS, POWER POLES, CATCH BASINS, VALVES, J-BOXES, ETC.) SHALL BE PERMITTED WITHIN THE SIDEWALK AREA
* ALL SURFACES SHALL HAVE A BROOM FINISH.
* SIDEWALKS, ACCESS RAMPS, AND RESIDENTIAL DRIVEWAYS SHALL BE 3000 PSI FIELD STRENGTH (3450 PSI LAB STRENGTH) 6.0 SACK MIX CONCRETE
* CURBS & COMMERCIAL DRIVEWAYS SHALL BE 3500 PSI FIELD STRENGTH (4025 PSI LAB STRENGTH) 6.3 SACK MIX CONCRETE

NO	REVISION	DATE	BY	APPR.

CITY OF SPRINGFIELD
SPRINGFIELD
DEPT. OF PUBLIC WORKS

SIDEWALK CONSTRUCTION

Al Peroutka City Engineer 2003

STANDARD DRAWING 3-12 2003

STANDARD CURB & GUTTER

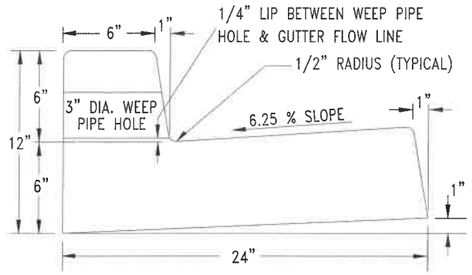

MOUNTABLE CURB & GUTTER

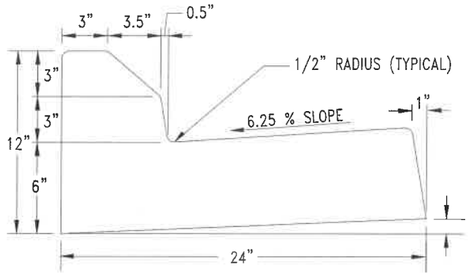

EXTRUDED CURB

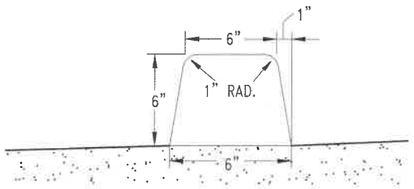

FULL DEPTH CURB

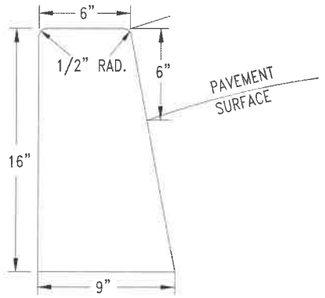

WEEP HOLES SHALL BE PLACED AT 75' O.C. OR AS OTHERWISE SPECIFIED REFER TO STD DWG. 3-XX FOR INSTALLATION DETAILS. IN NEW CONSTRUCTION, PLACE CONTRACTION JOINT OVER & IN FRONT OF PIPE

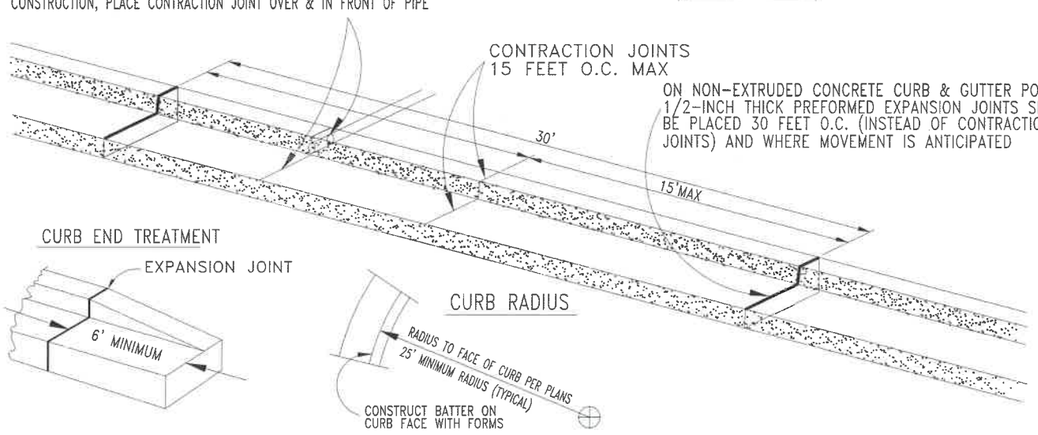

NOTES

* WHERE CONCRETE PAVEMENT WILL BE USED, CONTRACTION JOINTS SHALL BE PLACED TO MATCH TRANSVERSE CONTRACTION JOINT LOCATIONS IN STREET PAVEMENT AND 24" #5 REBAR TIE BARS SHALL BE PLACED IN GREEN CONCRETE.
* CURB AND GUTTER SURFACES SHALL HAVE A BROOM FINISH PARALLEL TO THE LENGTH OF THE CURB
* SIDEWALKS, ACCESS RAMPS, AND RESIDENTIAL DRIVEWAYS SHALL BE 3000 PSI FIELD STRENGTH (3450 PSI LAB STRENGTH) 6.0 SACK MIX CONCRETE
* CURBS & COMMERCIAL DRIVEWAYS SHALL BE 3500 PSI FIELD STRENGTH (4025 PSI LAB STRENGTH) 6.3 SACK MIX CONCRETE

NO	REVISION	DATE	BY	APPR.

CITY OF SPRINGFIELD
SPRINGFIELD
DEPT. OF PUBLIC WORKS

CURB & GUTTER

Al Peroutka City Engineer 2003

STANDARD DRAWING 3-5 2003

DO NOT USE THIS DETAIL FOR STANDARD CURB REMOVAL
REFER TO STANDARD DRAWING 3-7

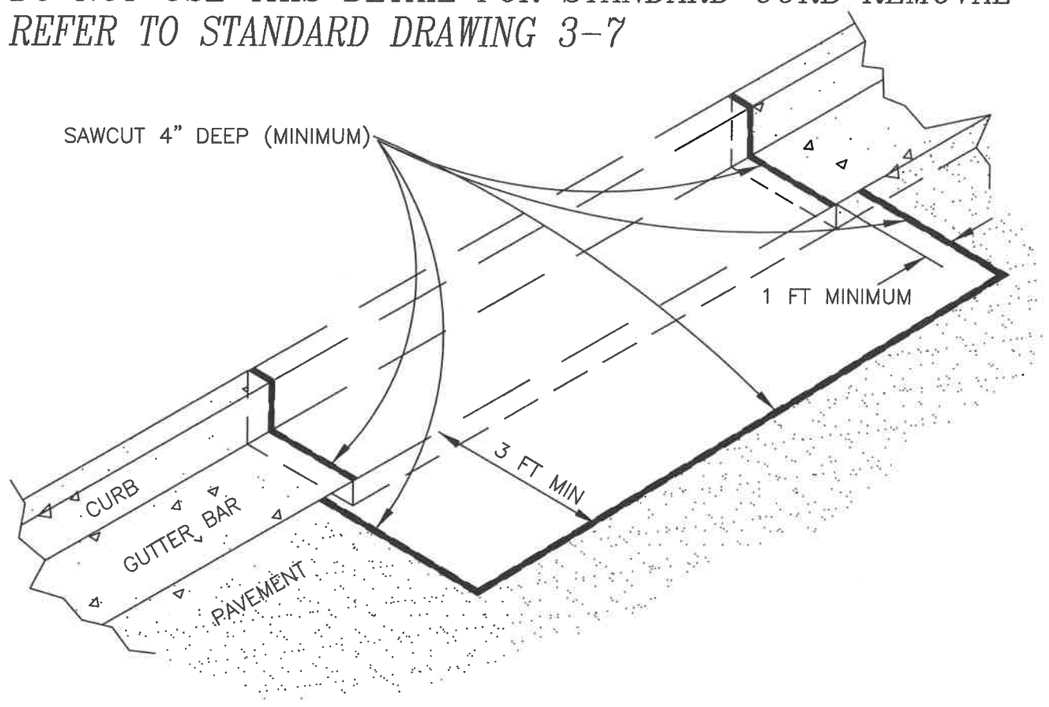

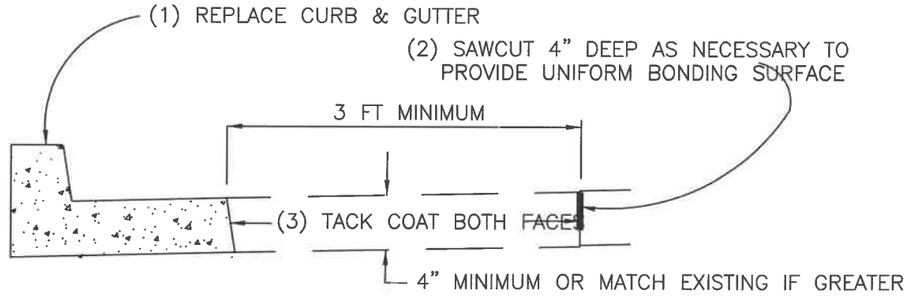

(4) PLACE HOT MIX ASPHALT AND USE MECHANICAL COMPACTION EQUIPMENT TO ACHIEVE REQUIRED DENSITY

(5) SEAL ALL JOINTS WITH POLYMERIZED ASPHALT AND SAND TO AVOID PICKUP

NOTES

* EXISTING GUTTER BAR SHALL NOT BE REMOVED WITHOUT PRIOR APPROVAL BY THE CITY
* CURB CUT WIDTH SHALL BE IN ACCORDANCE WITH PERMIT
* REFER TO SPRINGFIELD STANDARD SPECIFICATIONS FOR ROADWAY STRUCTURE COMPACTION REQUIREMENTS
* SIDEWALKS, ACCESS RAMPS, AND RESIDENTIAL DRIVEWAYS SHALL BE 3000 PSI FIELD STRENGTH (3450 PSI LAB STRENGTH) 6.0 SACK MIX CONCRETE
* CURBS & COMMERCIAL DRIVEWAYS SHALL BE 3500 PSI FIELD STRENGTH (4025 PSI LAB STRENGTH) 6.3 SACK MIX CONCRETE

NO	REVISION	DATE	BY	APPR.

CITY OF SPRINGFIELD
SPRINGFIELD
DEPT. OF PUBLIC WORKS

CURB & GUTTER
REMOVAL & REPLACEMENT

Al Peroutka City Engineer 2003

STANDARD DRAWING 3-8 2003

ILLUMINATION CONTROL CABINETS

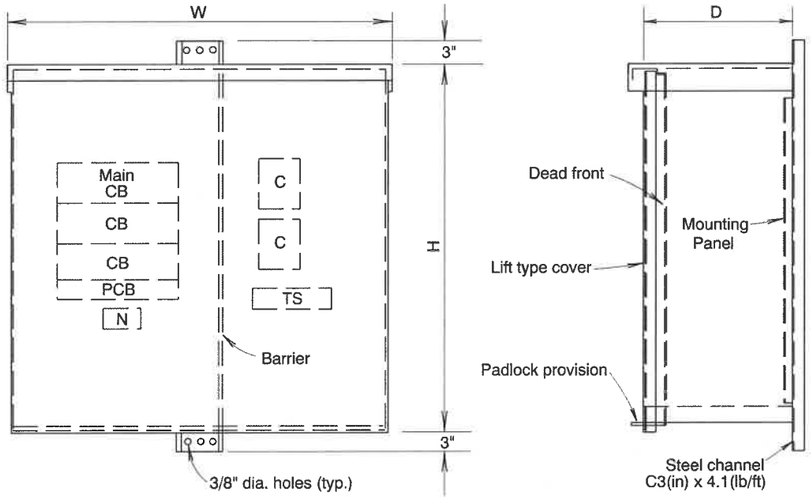

2P or 3 P CB	1P CB	Cont.	Neut.	Test S.W.	W	H	D
2	1	1	1	1	20"	16"	8"
3	1	2	1	1	20"	20"	8"
4	1	3	1	1	20"	24"	8"

- Type "A" cabinet
- Can accomodate 1 to 3 contactors (30 amp max.) Make cabinet depth 10" when 60 or 100 amp contactor is specified.

CABINET NO. 1

No Scale

GENERAL NOTES

- Type "A" cabinet has a top hinged lift cover with provision to hold cover in open position.
- Type "B" cabinet has cover hinged on left or right side with catch and handle.
- All enclosures shown on this drwg. shall bear a U. L. label reading: "CUTOUT BOX" (Raintight)
- Cabinets formed from 10 Gage thick sheet metal. Hot dip galvanized after fabrication or 12 gage type 304 or 306 stainless steel.
- Dimensions are based on the following frame sizes:
  - "TEB" for 240 v. rating
  - "TED" for 277, 480 and 600 v. rating
- All internal wiring, except field wires, shall be done by a U.L. listed facility.
- Deadfronts may be fabricated from code thickness galvanized sheet metal or type 304 or 316 stainless steel.
- For galvanized sheet metal deadfronts:
  - Cut edges shall be treated with zinc-rich paint.
  - They shall be primed with vinyl wash primer and finished with exterior polyurethane enamel.
  - The color shall be similar to that of OSHD formula no. 15-74 aluminum.
- Install copper buss bars for main and branch circuits.
- Provide 2 (min.) locater studs near top for dead fronts, and handle (finger) on dead front near bottom.

CB = Circuit Breaker
C = Contactor
N = Neutral Block (copper)
TS = Test Switch
PCB = Photocell Circuit Breaker

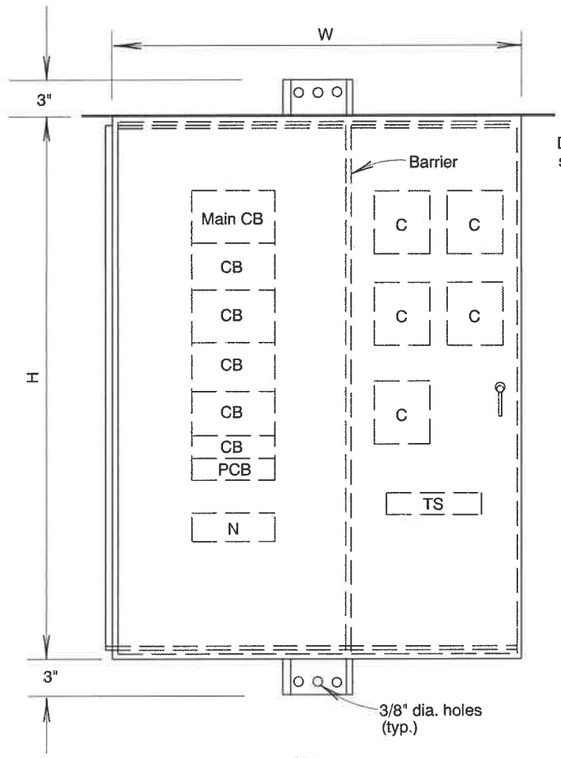

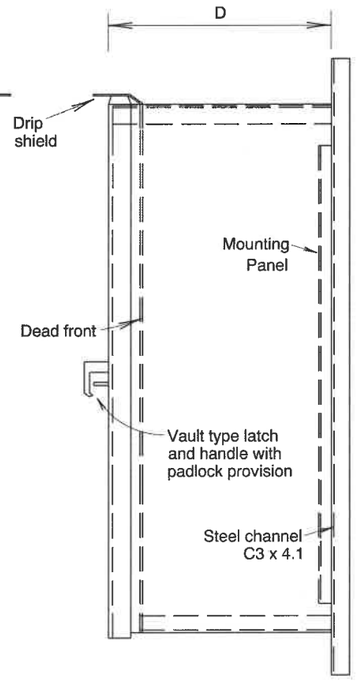

- Type "B" cabinet
- Can accomodate 4 to 6 contactors (30 amp max.) Make cabinet depth 10" when 60 or 100 amp contactor is specified.

2P or 3 P CB	1P CB	Cont.	Neut.	Test S.W.	W	H	D
5	1	4	1	1	24"	28"	8"
6	1	5	1	1	24"	32"	8"
7	1	6	1	1	24"	36"	8"

CABINET NO. 2

No Scale

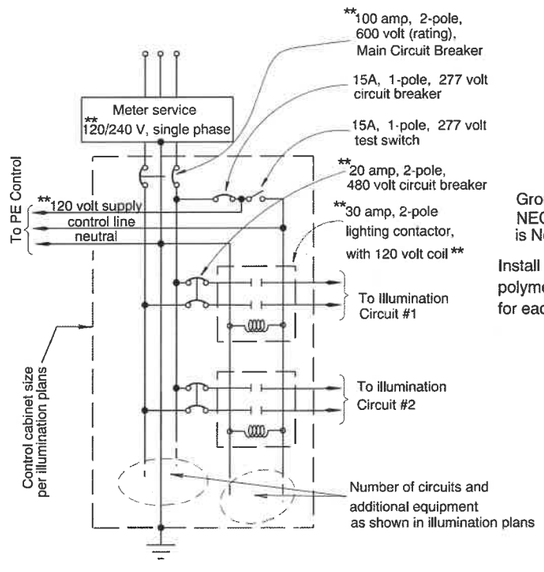

WIRING DIAGRAM
SERVICE & CONTROL CABINETS

** Electrical service voltage, equipment voltage and rating, breaker sizes are per illumination plans. Specific wiring diagram for each cabinet shall be shown in illumination plans and checked by Engineer.

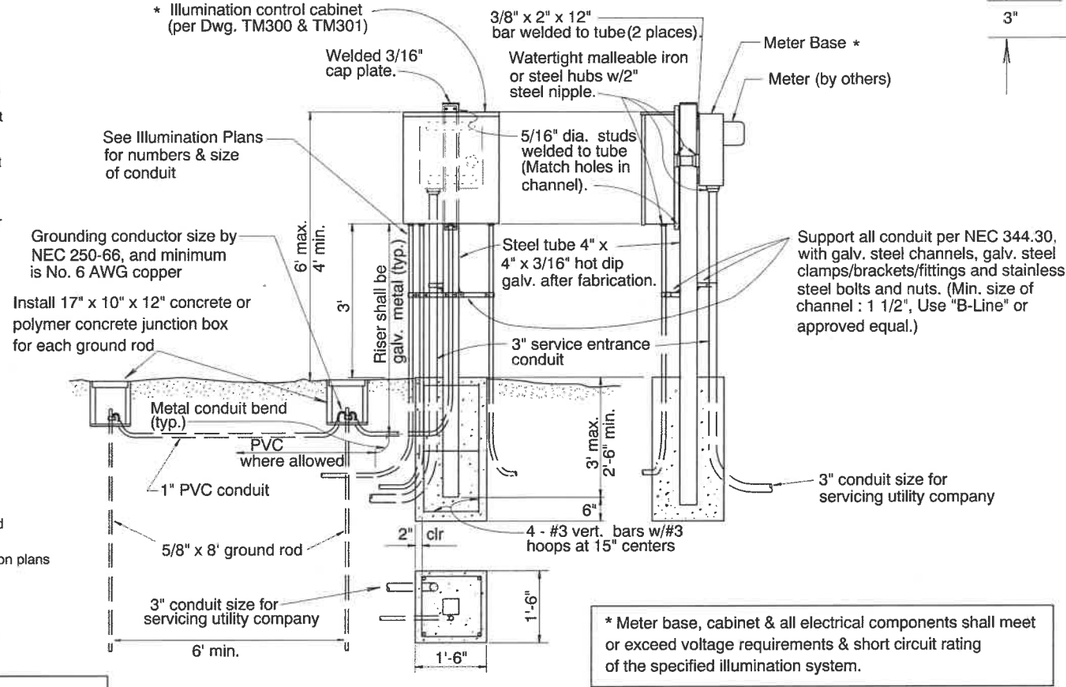

POST MOUNT ILLUMINATION CABINET

No Scale

* Meter base, cabinet & all electrical components shall meet or exceed voltage requirements & short circuit rating of the specified illumination system.

CALC. BOOK NO. N/A

BASELINE REPORT DATE 02 JAN 2008

NOTE: All material and workmanship shall be in accordance with the current Oregon Standard Specifications

The selection and use of this Standard Drawing, while designed in accordance with generally accepted engineering principles and practices, is the sole responsibility of the user and should not be used without consulting a Registered Professional Engineer.

OREGON STANDARD DRAWINGS

ILLUMINATION CONTROL CABINETS

2018

DATE	REVISION DESCRIPTION

TM 300

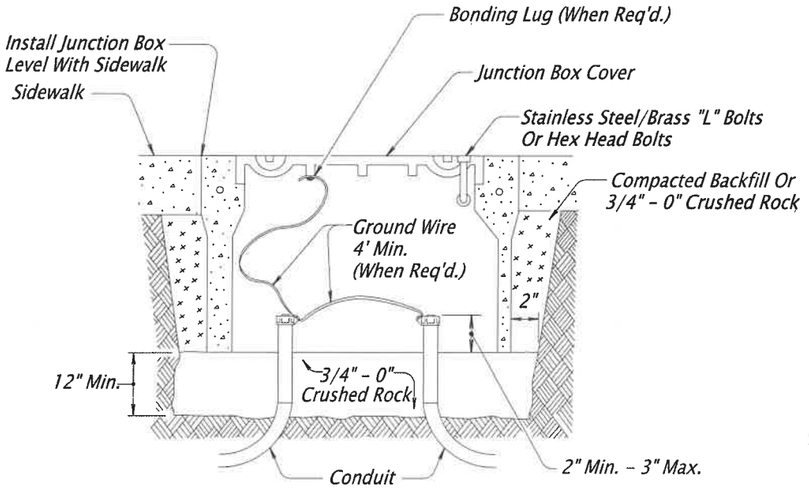

INSTALLATION IN SIDEWALK OR AT BACK OF CURB

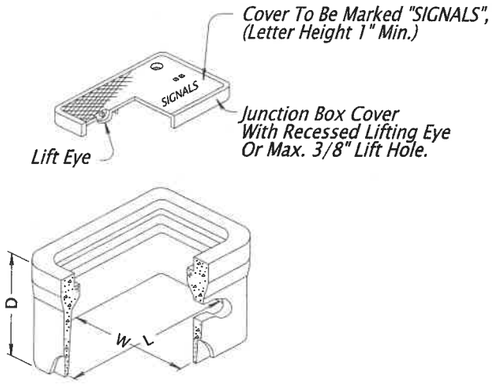

JUNCTION BOX

Not To Be Used In Travel Lanes, Shoulders Or Areas Exposed To Traffic.
For Location And Junction Box Dimensions, See Plans.

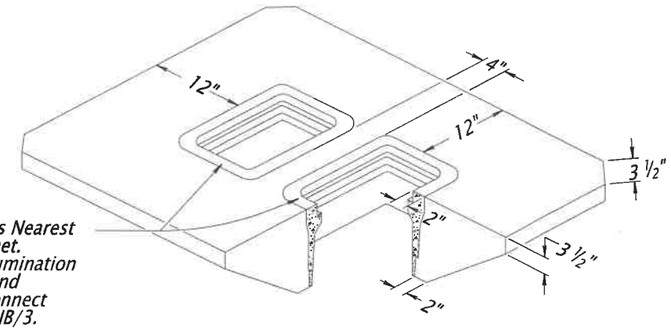

In The Tandem JB/3's Nearest The Controller Cabinet. Install Signal And Illumination Wiring In One JB/3 And Detector And Interconnect Cables In The Other JB/3.

PORTLAND CEMENT CONCRETE APRON FOR TANDEM JB/3A JUNCTION BOXES

(Approx. 10ft^3 Concrete In Neat Section)

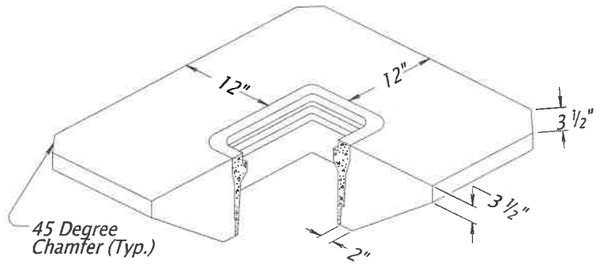

PORTLAND CEMENT CONCRETE APRON

(Approx. 7ft^3 Concrete In Neat Section)

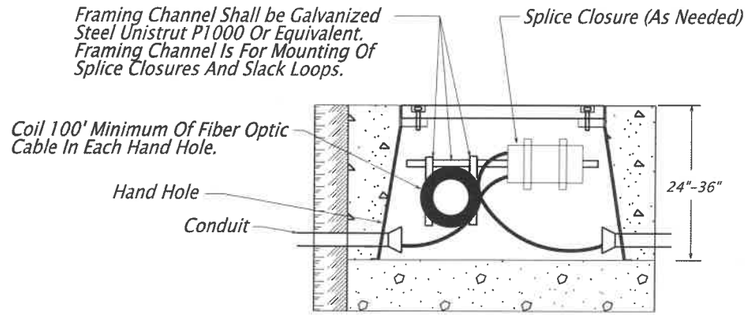

INSTALLATION OF HAND HOLE

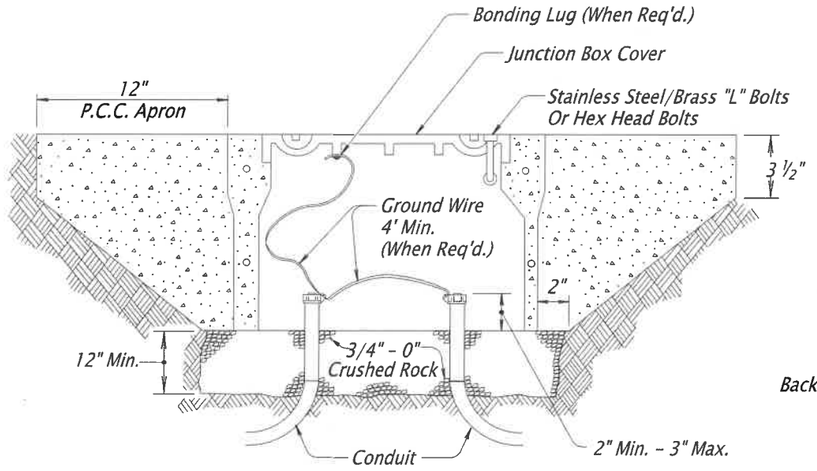

INSTALLATION WITH PORTLAND CEMENT CONCRETE APRON

(For Incidental Travel Areas Only; Gravel Shoulders, Behind Guardrail, Etc.)

Type	L	W	D	Type	L	W	D
JB1	17"	10"	12"	HH-1	24"	30"	24"
JB2	22"	12"	12"	HH-2	30"	48"	24"
JB3	30"	17"	12"	HH-3	30"	48"	36"

JUNCTION BOX/ HAND HOLE DIMENSION TABLE

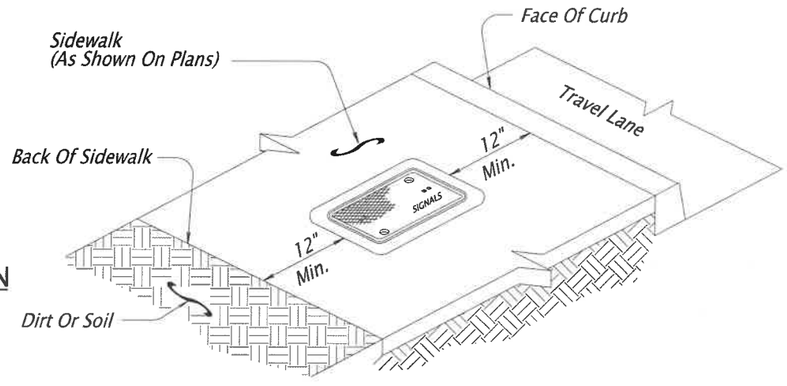

JUNCTION BOX PLACEMENT WITHIN SIDEWALKS

(Junction Boxes To Be Located Only In Flat Areas Of Sidewalks, Concrete Junction Boxes Are Not To Be Installed In Slopes Of Ramps Or Driveways)

GENERAL NOTE:

1.) Use Stainless Steel / Brass Bolts Or Hex Head Bolts To Secure Lid.

CALC. BOOK NO. N/A

BASELINE REPORT DATE

NOTE: All material and workmanship shall be in accordance with the current Oregon Standard Specifications

The selection and use of this Standard Drawing, while designed in accordance with generally accepted engineering principles and practices, is the sole responsibility of the user and should not be used without consulting a Registered Professional Engineer.

OREGON STANDARD DRAWINGS

TRAFFIC SIGNAL JUNCTION BOXES/ HAND HOLES

2018

DATE	REVISION DESCRIPTION

filename.dgn DD-MON-YYYY

TM472

Effective Date: June 1, 2018 - November 30, 2018

P21149 BIKE/PED SAFETY RRFB/CROSSING CONSTRUCTION (S. 32ND STREET PED CROSSING)

PROJECT DESCRIPTION

THIS PORTION (2 OF 4) OF THE PROJECT WILL CONSIST OF CONSTRUCTING A PEDESTRIAN CROSSING WITH A MEDIAN ISLAND RRFB FLASHING LIGHTS AND STRIPING ON S 32ND STREET NEAR AGNES STEWART MIDDLE SCHOOL. THIS PORTION OF THE PROJECT WAS DESIGNED UNDER P21143 – S. 32ND STREET PEDESTRIAN CROSSING.

LEGEND

- RIGHT OF WAY (ROW) LINE — ROW
- GAS LINE — G — G
- FIBER OPTIC (NO. OF CABLES) — FO
- WATER LINE — W — W
- POWER (ELECTRIC) — E — E
- STORM SEWER (EXISTING) — SD — SD
- SANITARY SEWER (EXISTING) — SS — SS
- COMMUNICATION LINE (EXISTING) — COM — COM
- TV LINE (EXISTING) — TV
- GAS VALVE
- WATER VALVE
- FIRE HYDRANT
- WATER METER
- UTILITY BOX
- POWER POLE/LIGHT
- CATCH BASIN (EXISTING)
- CURB INLET (NEW)
- STORM MANHOLE (NEW) (SD)
- SANITARY MANHOLE (EXISTING) (SS)
- SANITARY MANHOLE (NEW) (SS)
- STORM AREA DRAIN (NEW)
- MAIL BOX (MB)
- UTILITY POLE

ABBREVIATIONS

AC	ASPHALTIC CONCRETE
ABAN	ABANDON(ED)
ADA	AMERICANS W/ DISABILITIES ACT
AL	ALUMINUM
APPROX	APPROXIMATE
APPVD	APPROVED
ASSY	ASSEMBLY
ARV	AIR RELEASE VALVE
BLDG	BUILDING
BM	BENCHMARK
BO	BLOWOFF
BTM	BOTTOM
C/L	CENTER LINE
CB	CATCH BASIN
CCP	CONCRETE CULVERT PIPE
CI	CAST IRON
CG	CURB/GUTTER
CL	CLASS
CO	CLEANOUT
CON(C)	CONCRETE
CONST	CONSTRUCTION
COP	COPPER
COS	CITY OF SPRINGFIELD
CPLG	COUPLING
CR	CRUSHED ROCK
CV	CHECK VALVE
CY	CUBIC YARD
D	DRAIN
DET	DETAIL
DI	DUCTILE IRON
DIA/ø	DIAMETER
DR	DRIVE
DWG	DRAWING
DWY	DRIVEWAY
EA	EACH
EL	ELEVATION
ELEC/E	ELECTRICAL
EOP	EDGE OF PAVEMENT
EQ	EQUAL
EQUIP	EQUIPMENT
ESMT	EASEMENT
EX	EXISTING
FAB	FABRICATE
FD	FLOOR DRAIN
FH	FIRE HYDRANT
FIN GR	FINISHED GRADE
FL	FLOW LINE
FLG	FLANGE(D)
FM	FORCE MAIN
FT	FOOT
FTG	FITTING
G	GAS
GALV	GALVAIZED
GR	GRADE
GRVL	GRAVEL
GV	GATE VALVE
HORIZ	HORIZONTAL
HWY	HIGHWAY
HP	HIGH PRESSURE
ID	INSIDE DIAMETER
IE	INVERT ELEVATION
INSTL	INSTALL
LDAP	LAND & DRAINAGE ALTERATION PERMIT
LAT	LATERAL
LF	LINEAL FEET
LP	LOW PRESSURE
MATL(S)	MATERIAL(S)
MAX	MAXIMUM
MFR(S)	MANUFACTURER(S)
MH(S)	MANHOLE(S)
MHSD	MANHOLE STORM DRAIN
MHSS	MANHOLE SANITARY SEWER
MIN	MINIMUM
MJ	MECHANICAL JOINT
MUTCH	MANUAL ON UNIFORM TRAFFIC CONTROL DEVICES
NTS	NOT TO SCALE
OC	ON CENTER
OD	OUTSIDE DIAMETER
ODOT	OREGON DEPARTMENT OF TRANSPORTATION
OVHD	OVERHEAD UTILITY
P	POWER
PCC	PORTLAND CEMENT CONCRETE
PE	PLAIN END
PERM	PERMANENT
P/L	PROPERTY LINE
POLY	POLYETHYLENE
PROP	PROPOSED
PRESS	PRESSURE
PROP	PROPOSED
PS	PUMP STATION
PUGD	UNDERGROUND POWER
PV	PLUG VALVE
PVC	POLYVINYL CHLORIDE
PVMT	PAVEMENT
RCP	REINFORCED CONCRETE PIPE
RD	ROAD
RDCR	REDUCER
REINF	REINFORCE(D)(ING)(MENT)
RESTR	RESTRAIN(ED)
REQ'D	REQUIRED
ROW	RIGHT OF WAY
SCHED	SCHEDULE
SD	STORM DRAIN
SERV	SERVICE
SHT(S)	SHEETS
SL	SLOPE
SPECS	SPECIFICATIONS
SPL	SPOOL
SQ	SQUARE
SQ FT	SQUARE FOOT
SS	SANITARY SEWER
SST	STAINLESS STEEL
ST	STREET
STA	STATION
STL	STEEL
STD	STANDARD
SUB	SPRINGFIELD UTILITY BOARD
S/W	SIDEWALK
TEL/T	TELEPHONE
TB	THRUST BLOCK
TEMP	TEMPORARY
THK	THICK
THRU	THROUGH
TV	TELEVISION
TYP	TYPICAL
VERT	VERTICAL(LY)
W	WATER
W/	WITH
W/IN	WITHIN
W/O	WITHOUT
W/M	WATER METER

VICINITY MAP

SHEET INDEX

TITLE SHEET	SHT. P1
GENERAL NOTES	SHT. P2
SITE PLAN	SHT. P3
CONSTRUCTION PLAN	SHT. P4
ELECTRICAL PLAN	SHT. P5
WEST PED POLE DETAIL	SHT. D1
ISLAND PED POLE DETAIL	SHT. D2
EAST PED POLE DETAIL	SHT. D3
ISLAND DETAILS	SHT. D4
ISLAND DETAILS	SHT. D5
RAMP DETAILS	SHT. D6
STRIPING DETAIL	SHT. D7
EROSION CONTROL NOTES	SHT. E1
EROSION CONTROL	SHT. E2

No.	Revision/Issue	Date
DRAWN: CJG		

NOTE:

UTILITY LOCATIONS ARE APPROXIMATE
DO NOT
SCALE OR LOCATE UTILITY LINES OR MAINS FROM THESE DRAWINGS
CALL FOR UTILITY LOCATES 811 or (1-800-332-2344)

THE CONTRACTOR SHALL BE RESPONSIBLE FOR DETERMINING UTILITY LOCATIONS PRIOR TO BEGINNING OF CONSTRUCTION. THESE PLANS MAY NOT SHOW ALL UTILITIES OR THE CORRECT LOCATIONS.

P21149 BIKE/PED SAFETY RRFB/CROSSING CONSTRUCTION (S. 32ND STREET PED CROSSING)

City of Springfield
PUBLIC WORKS / ENGINEERING
225 FIFTH STREET, SPRINGFIELD, OR 97477
PHONE (541) 726-3753 FAX (541) 736-3689
INTERNET www.springfield-or.gov

ENGINEERS STAMP

REGISTERED PROFESSIONAL ENGINEER
54699PE
OREGON
JULY 15, 2003
JEFFREY ALAN PASCHALL

EXPIRATION DATE: 12-31-20

SHEET
P1

GENERAL NOTES

A. ALL MATERIALS AND WORKMANSHIP WITHIN THE PUBLIC RIGHT-OF-WAY OR PUBLIC EASEMENTS SHALL MEET STANDARD SPECIFICATIONS FOR CONSTRUCTION, AS SPECIFIED IN SECTION 'A' OF THE SPECIAL PROVISIONS IN ADDITION TO ALL OTHER SPECIFICATIONS REFERENCED OR INCLUDED, AND IN ADDITION TO THESE PLANS.

B. OREGON LAW REQUIRES THE CONTRACTOR TO FOLLOW RULES ADOPTED BY THE OREGON UTILITY NOTIFICATION CENTER. THESE RULES ARE SET FORTH IN OAR 952-001-0010 THROUGH OAR 952-001-0100. THE CONTRACTOR MAY OBTAIN COPIES OF THE RULES BY CALLING THE CENTER. NOTE: THE TELEPHONE NUMBER FOR THE OREGON UTILITY NOTIFICATION CENTER IS (800) 332-2344 OR 811.

C. LOCATION AND/OR DEPTH OF EXISTING UTILITIES SHOWN ON PLANS ARE APPROXIMATE. ALL UTILITIES MAY NOT APPEAR ON PLANS. IT IS THE CONTRACTOR'S RESPONSIBILITY TO CONTACT ALL UTILITY COMPANIES FOR UNDERGROUND LOCATION OF FACILITIES AT LEAST 48 HOURS PRIOR TO EXCAVATING OR "POTHOLING". THE "ONE-CALL" NUMBER IS 332-2344 OR 811.

D. CONTRACTOR SHALL BE RESPONSIBLE FOR COORDINATION WITH UTILITY COMPANIES ON THE TIMING OF INSTALLATION OF THEIR FACILITIES.

E. SPRINGFIELD CODE 10.2.1 REQUIRES NOTIFICATION OF OPEN TRENCHING FOR THE PROJECT TO ALLOW POSSIBLE COMMUNICATION CABLE INSTALLATION.

F. THE CONTRACTOR SHALL PROVIDE ALL TRAFFIC CONTROL DEVICES NECESSARY TO PROTECT AND SAFEGUARD THE PUBLIC AND WORKERS AGAINST INJURY AND PROTECT THE WORK AGAINST DAMAGE. ALL TEMPORARY TRAFFIC CONTROL SIGNING AND DEVICES SHALL BE IN PLACE PRIOR TO BEGINNING WORK. ALL TRAFFIC CONTROL SHALL CONFORM TO THE MANUAL ON UNIFORM TRAFFIC CONTROL DEVICES FOR STREETS AND HIGHWAYS (MUTCD), CURRENT EDITION, AS SUPPLEMENTED AND AMENDED BY THE OREGON SUPPLEMENTS. FLAGGING SHALL BE PERFORMED AS SHOWN IN THE "OREGON TEMPORARY TRAFFIC CONTROL HANDBOOK FOR OPERATIONS OF THREE DAYS OR LESS", 2011 OR CURRENT EDITION. THE CONTRACTOR SHALL BE RESPONSIBLE FOR ANY REQUIRED TRAFFIC CONTROL AS FIELD CONDITIONS WARRANT. THE CONTRACTOR SHALL SUBMIT A TRAFFIC CONTROL PLAN AT THE PRE-CONSTRUCTION CONFERENCE FOR CITY REVIEW AND APPROVAL.

G. ALL SANITARY AND STORM SEWER CONNECTIONS TO EXISTING CITY OWNED FACILITIES (PIPE, CATCH BASINS, MANHOLES, ETC.) SHALL BE INSPECTED BY THE CONTRACTOR AND THE CITY'S PUBLIC WORKS MAINTENANCE DEPARTMENT PRIOR TO HOOK UP. CONTACT MAINTENANCE AT (541-726-3761) OR CITY CONSTRUCTION INSPECTOR NO LESS THAN 48 HOURS PRIOR TO DESIRED INSPECTION TIME.

H. WHERE CONNECTING TO AN EXISTING PIPE, THE CONTRACTOR SHALL EXPOSE THE END OF THE EXISTING PIPE AND ALLOW THE ENGINEER TO VERIFY EXACT LOCATION AND ELEVATION, CONDITION, AND POSITIVE FLOW BEFORE LAYING ANY NEW PIPE IN THAT SYSTEM.

I. THE SEWER GRADE SHALL BE PER THE PLANS AND SPECIFICATIONS AND WITH THE MINIMUM COVER AS SHOWN ON THE PLANS.

J. THE CONTRACTOR SHALL INTERNALLY TELEVISION INSPECT THE SEWER AFTER ALL BACKFILL AND BEFORE THE FINAL LIFT OF ASPHALT PAVING. THE CONTRACTOR SHALL SUPPLY THE CITY WITH A WRITTEN T.V. REPORT AND VIDEO TAPE OR DVD FOR CITY APPROVAL AT LEAST 2 WORKING DAYS BEFORE THE PRE-PAVING MEETING.

K. CONTRACTOR TO SCHEDULE A PRE-PAVING CONFERENCE 24 HOURS PRIOR TO PAVING. CONTACT THE CONSTRUCTION INSPECTOR.

L. ALL JOINTS BETWEEN EXISTING AND NEW ASPHALT PAVING SHALL BE SEALED WITH POLYMERIZED ASPHALT AND SANDED TO PREVENT PICK UP.

M. COMPACTION REQUIREMENTS:

LAYER	RATE	TEST
SUBGRADE	95%	T99
CRUSHED ROCK	95%	T180
ASPHALT (LOCAL)	90%	RICE
ASPHALT (COLLECTOR/ARTERIAL)	92%	RICE

N. CONCRETE COMPRESSIVE STRENGTH REQUIREMENTS (PSI):

CONCRETE USE	FIELD	LABORATORY
SIDEWALK/ADA RAMPS	3000	3450
CURBS/GUTTERS	3500	4025
DRIVEWAYS	3500	4025
PAVEMENT	4000	4600

O. THIS PROJECT SHALL COMPLY WITH THE AMERICAN DISABILITIES ACT REQUIREMENTS SUCH AS INCORPORATION OF DESIGN CRITERIA FOR RAMPS, MAXIMUM PROFILE AND CROSS SECTION SLOPES FOR SIDEWALKS, UPGRADING EXISTING FACILITIES WHERE MAJOR CONSTRUCTION IS OCCURRING, AND BUILDING WARNING FOR OBJECTS IN SIDEWALK SUCH AS CURBING OR LANDSCAPING AROUND MAILBOXES.

P. CONTRACTOR IS RESPONSIBLE TO OBTAIN APPLICABLE PERMITS FROM OTHER AGENCIES WITH JURISDICTIONS SUCH AS LANE COUNTY, OREGON DEPARTMENT OF TRANSPORTATION, OREGON DIVISION OF STATE LANDS, THE ARMY CORPS OF ENGINEERS, OR THE DEPARTMENT OF ENVIRONMENTAL QUALITY.

Q. ALL IMPROVEMENTS THAT WILL BE PRIVATELY OWNED AND MAINTAINED WILL BE BOUND BY THE CURRENT REQUIREMENTS OF THE STATE OF OREGON STRUCTURAL SPECIALITY CODE, PLUMBING SPECIALTY CODE, AND/OR CITY OF SPRINGFIELD BUILDING DIVISION REQUIREMENTS. CONTRACTOR IS RESPONSIBLE TO OBTAIN APPLICABLE PERMITS FROM OTHER CITY DEPARTMENTS PRIOR TO DOING PRIVATE WORK.

R. EROSION CONTROL MEASURES SHALL BE IN PLACE PRIOR TO THE START OF CONSTRUCTION. SEE EROSION CONTROL PLAN.

S. STREET TREES: ONLY STREET TRESS WITH A MINIMUM TRUNK CALIPER OF 2 IN. MEASURED 6 IN. ABOVE THE ROOT STEM SHALL BE SELECTED FOR PLANTING.

T. A PRE-CONSTRUCTION CONFERENCE IS REQUIRED BEFORE START OF CONSTRUCTION. ALL UTILITIES, CONTRACTORS, AND CITY REPRESENTATIVES SHALL HAVE RECEIVED THE FINAL APPROVED PLANS AT LEAST 5 WORKING DAYS PRIOR TO THE PRE-CONSTRUCTION CONFERENCE.

U. THE ENGINEER AND/OR CITY HAVE THE RIGHT TO REQUIRE ADDITIONAL WORK NOT SHOWN HEREIN BUT NECESSARY FOR THE SUCCESSFUL COMPLETION OF THE PROJECT. STD. SPEC. 104.08.

V. REQUESTS BY THE CONTRACTOR FOR CHANGES SHALL BE APPROVED BY THE ENGINEER AND THE CITY IN WRITING PRIOR TO IMPLEMENTATION.

W. CONTRACTOR SHALL SUBMIT EVIDENCE OF INSURANCE IN ACCORDANCE WITH THE STANDARD SPECIFICATION TO THE CITY FOR APPROVAL PRIOR TO BEGINNING WORK.

X. CONTRACTOR SHALL BE AWARE IF PAVING IS NOT SCHEDULED OR DOES NOT OCCUR PRIOR TO OCTOBER 15TH, WET WEATHER PROVISIONS INCLUDING ADDITIONAL ROCK SUBSTRUCTURE AND GEOTEXTILE FABRIC SHALL BE USED. REFER TO STANDARD SPECIFICATION SHEET 301.1.01 AND THE TYPICAL CROSS SECTIONS CONTAINED HEREIN FOR DETAILS.

Y. THE CONTRACTOR SHALL VERIFY EACH EXISTING SANITARY AND STORM CONNECTION.

No.	Revision/Issue	Date
DRAWN: CJG		

NOTE:

UTILITY LOCATIONS ARE APPROXIMATE
DO NOT
SCALE OR LOCATE UTILITY LINES OR MAINS FROM THESE DRAWINGS
CALL FOR UTILITY LOCATES 811 or (1-800-332-2344)

THE CONTRACTOR SHALL BE RESPONSIBLE FOR DETERMINING UTILITY LOCATIONS PRIOR TO BEGINNING OF CONSTRUCTION. THESE PLANS MAY NOT SHOW ALL UTILITIES OR THE CORRECT LOCATIONS.

P21149 BIKE/PED SAFETY RRFB/CROSSING CONSTRUCTION (S. 32ND STREET PED CROSSING)

City of Springfield

PUBLIC WORKS / ENGINEERING
226 FIFTH STREET, SPRINGFIELD, OR 97477
PHONE (541) 726-3753 FAX (541) 736-3689
INTERNET www.springfield-or.gov

ENGINEERS STAMP

REGISTERED PROFESSIONAL ENGINEER
54699PE
OREGON
JULY 15, 2003
JEFFREY ALAN PASCHALL

EXPIRATION DATE: 12-31-20

SHEET
P2

SITE PLAN

NOTES

1. REMOVE EXISTING ADVANCE SCHOOL CROSSING STRIPING.
2. REMOVE EXISTING CROSSWALK STRIPING AND SIGNAGE.
3. REMOVE EXISTING ADA RAMPS AND FACECUT GUTTER. REPLACE WITH SIDEWALK AND CURB TO MATCH EXISTING WIDTHS AND ELEVATIONS. SEE CITY OF SPRINGFIELD STANDARD DETAIL 3–7 FOR CURB REMOVAL.
4. SAWCUT, ADD NEW RRFB CROSSING AT THIS LOCATION. SEE SHEET P4 FOR CONSTRUCTION PLAN.
5. ADD NEW ADVANCE SCHOOL CROSSING STRIPING. SEE DETAIL SHEET D8 FOR LOCATION DIMENSIONS.
6. REMOVE EXISTING SCHOOL ZONE SPEED FLASHER. MOVE FLASHER TO LOCATION SHOWN ON NOTE 7.
7. REMOVE EXISTING CROSSWALK AHEAD SIGN. REPLACE WITH A NEW FOUNDATION FOR THE RELOCATED SCHOOL ZONE SPEED FLASHER.
8. INSTALL OVERHEAD WIRE CONNECTED TO TRANSFORMER SOUTH OF CROSSING.

NORTH

0 100' 200'

No.	Rewision/Issue	Date
DRAWN: CJG		

NOTE:

UTILITY LOCATIONS ARE APPROXIMATE
DO NOT
SCALE OR LOCATE UTILITY LINES OR MAINS FROM THESE DRAWINGS
CALL FOR UTILITY LOCATES 811 or (1-800-332-2344)

THE CONTRACTOR SHALL BE RESPONSIBLE FOR DETERMINING UTILITY LOCATIONS PRIOR TO BEGINNING OF CONSTRUCTION.
THESE PLANS MAY NOT SHOW ALL UTILITIES OR THE CORRECT LOCATIONS.

P21149 BIKE/PED SAFETY RRFB/CROSSING CONSTRUCTION (S. 32ND STREET PED CROSSING)

City of Springfield
PUBLIC WORKS / ENGINEERING
225 FIFTH STREET, SPRINGFIELD, OR 97477
PHONE (541) 726-3753 FAX (541) 726-3689
INTERNET www.springfield-or.gov

ENGINEERS STAMP

REGISTERED PROFESSIONAL ENGINEER
54699PE
OREGON
JULY 15, 2003
JEFFREY ALAN PASCHALL
12-31-19

EXPIRATION DATE: 12-31-20

SHEET
P3

CONSTRUCTION PLAN

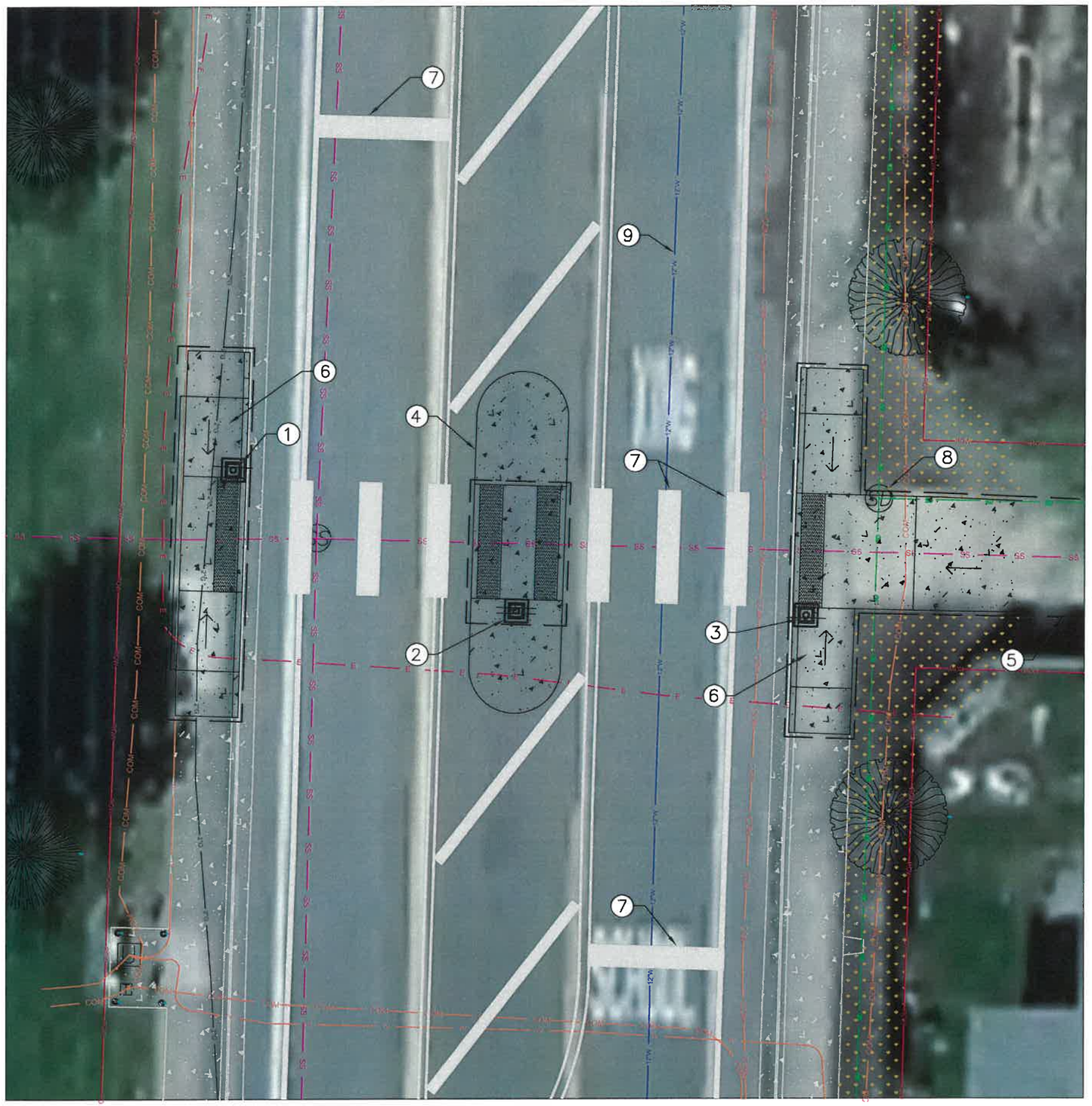

NOTES

1. WEST SIDE
   CONSTRUCT PEDESTRIAN POLE ASSEMBLY WITH ONE SIDED RRFB AND SIGNS. LEAVE FOUNDATION SHORT AND BOLTS EXTENDED TO BE FINISHED WITH SIDEWALK. (SEE DETAIL SHEET D1)

2. CENTER ISLAND
   CONSTRUCT PEDESTRIAN POLE ASSEMBLY WITH TWO SIDED RRFB AND SIGNS. LEAVE FOUNDATION SHORT AND BOLTS EXTENDED TO BE FINISHED WITH ISLAND. (SEE DETAIL SHEET D2)

3. EAST SIDE
   CONSTRUCT PEDESTRIAN POLE ASSEMBLY WITH ONE SIDED RRFB AND SIGNS. LEAVE FOUNDATION SHORT AND BOLTS EXTENDED TO BE FINISHED WITH SIDEWALK. (SEE DETAIL SHEET D3)

4. CONSTRUCT "MOUNTABLE TYPE C ISLAND" WITH DOWELS PER MODIFIED ODOT STANDARD DETAIL RD705 WITH 3,500 PSI CONCRETE. (SEE DETAIL SHEET D5)

5. CONTINUE SAWCUT TO NEXT JOINT, NOT SHOWN ON SHEET.

6. REMOVE EX. SIDEWALK AND CURB. FACECUT GUTTER AND CONSTRUCT DEPRESSED ADA RAMP WITH A 7.5% MAX RAMP SLOPE AND 1.5% MAX CROSS SLOPE. PLACE 2'x10' TRUNCATED DOME IN LANDING (SEE DETAIL SHEET D7). SEE CITY OF SPRINGFIELD STANDARD DETAIL 3–7 FOR CURB REMOVAL.

7. INSTALL 24" WHITE PLASTIC STRIPING. (SEE DETAIL SHEET D8)

8. MANHOLE IS NOT ABLE TO BE ADJUSTED.PLACE CONCRETE AROUND MANHOLE

9. EXISTING STANDBY WATER LINE.

LEGEND

- RRFB POLE
- NEW CONCRETE
- EXISTING CONCRETE
- SAWCUT (LOCATION TBD BY INSPECTORS AND PROJECT MANAGER IN FIELD)
- TRUNCATED DOMES

NORTH

0 10' 20'

No.	Revision/Issue	Date
DRAWN: CJG		

NOTE:

UTILITY LOCATIONS ARE APPROXIMATE
DO NOT
SCALE OR LOCATE UTILITY LINES OR MAINS FROM THESE DRAWINGS
CALL FOR UTILITY LOCATES
811 or (1-800-332-2344)

THE CONTRACTOR SHALL BE RESPONSIBLE FOR DETERMINING UTILITY LOCATIONS PRIOR TO BEGINNING OF CONSTRUCTION. THESE PLANS MAY NOT SHOW ALL UTILITIES OR THE CORRECT LOCATIONS.

P21149 BIKE/PED SAFETY RRFB/CROSSING CONSTRUCTION (S. 32ND STREET PED CROSSING)

City of Springfield
PUBLIC WORKS / ENGINEERING
225 FIFTH STREET, SPRINGFIELD, OR 97477
PHONE (541) 726-3753 FAX (541) 736-3689
INTERNET www.springfield-or.gov

ENGINEERS STAMP

REGISTERED PROFESSIONAL ENGINEER
54699PE
OREGON
JULY 15, 2003
JEFFREY ALAN PASCHALL

EXPIRATION DATE: 12-31-20

SHEET
P4

ELECTRICAL PLAN

NORTH

0 10' 20'

LEGEND

PP RRFB — INSTALL PEDESTRIAN SIGNAL PEDESTAL ON FRANGIBLE BASE WITH RECTANGULAR RAPID FLASHING BEACON (RRFB), AND APS PEDESTRIAN PUSH BUTTON AND SIGN. (SEE RRFB DETAIL SHEET).

C NSC — INSTALL RRFB NETWORK SYSTEM CONTROLLER (NSC) ELTEC – MODEL SL55. (SEE SPECIAL PROVISIONS).

N / G — INSTALL (N–NUMBER) NO. (G=AWG WIRE SIZE) TYPE THWN CONDUCTORS WITH GREEN INSULATED GROUND.

X–N G — INSTALL (X=NUMBER OF CABLES) WITH (N=NUMBER) AWG NO. (G=AWG WIRE SIZE) TYPE 18AWG BELDON 27601A.

S — INSTALL (S=SIZE) INCH SCHEDULE 40 PVC ELECTRICAL CONDUIT.

PL — INSTALL POLY PULL LINE (225 FT./LB. MIN. STRENGTH).

AL 12 — INSTALL ALUMINUM, 30"x30" W11–2 "PEDESTRIAN CROSSING" WARNING SIGN WITH FLUORESCENT YELLOW, DIAMOND GRADE SHEETING.

AL 13 — INSTALL ALUMINUM, 24"x12" W16–7P "ARROW" WARNING SIGN WITH FLUORESCENT YELLOW, DIAMOND GRADE SHEETING.

JB 2 — INSTALL 22"x12"x12" PRECAST POLYMER CONCRETE JUNCTION BOX PER ODOT STANDARD DETAIL TM472.

HDD — INSTALL CONDUIT BY HORIZONTAL DIRECTIONAL DRILLING (OPEN TRENCH NOT ALLOWED).

CS — INSTALL 2" CONDUIT SPARE (CAP ENDS).

XX / X — EXISTING ITEM (DASHED SYMBOLS) (PROTECT AND MAINTAIN)

L = LENGTH SHOWN X = NUMBER OF CABLES S = SIZE SHOWN
T = TYPE SHOWN G = AWG SIZE SHOWN

MS — INSTALL 120 VOLT SERVICE METER BASE

SC 1 — INSTALL 6"x8"x12" SERVICE CABINET, 120 VOLT 60 AMP MAIN W/ 15 AMP CIRCUIT BREAKER FOR RRFB. SEE SHEET D1.

PPP RRFB — INSTALL PEDESTRIAN PUSH BUTTON POST. SEE SHEET D2.

X–N G — INSTALL (X=NUMBER OF CABLES) CONTROL CABLES WITH (N=NUMBER) AWG NO. (G=AWG WIRE SIZE) CONTROL CABLE

NOTES

10 — INSTALL AND/OR MAINTAIN A NO. 16 AWG THWN STRANDED COPPER WIRE WITH AN ORANGE BASE AND BLUE STRIPE IN ALL CONDUITS AS A LOCATE WIRE.

11 — INSTALL SPARE 2" CONDUIT CROSSING FOR FUTURE USE.

12 — SUB WILL INSTALL OVERHEAD WIRE CONNECTING POLE #97008 TO TRANSFORMER APPROXIMATELY 180' SOUTH OF CROSSING ON POLE #97009. SUB WILL ALSO BRING POWER UNDERGROUND ROUGHLY 20' FROM POLE #97008. SEE SITE PLAN FOR LOCATION OF POLE #97009. (SEE SHEET P3)

No.	Revision/Issue	Date
DRAWN: CJG		

NOTE:

UTILITY LOCATIONS ARE APPROXIMATE
DO NOT
SCALE OR LOCATE UTILITY LINES OR MAINS FROM THESE DRAWINGS
CALL FOR UTILITY LOCATES 811 or (1-800-332-2344)

THE CONTRACTOR SHALL BE RESPONSIBLE FOR DETERMINING UTILITY LOCATIONS PRIOR TO BEGINNING OF CONSTRUCTION.
THESE PLANS MAY NOT SHOW ALL UTILITIES OR THE CORRECT LOCATIONS.

P21149 BIKE/PED SAFETY RRFB/CROSSING CONSTRUCTION (S. 32ND STREET PED CROSSING)

City of Springfield

PUBLIC WORKS / ENGINEERING
225 FIFTH STREET, SPRINGFIELD, OR 97477
PHONE (541) 726-3753 FAX (541) 736-3689
INTERNET www.springfield-or.gov

ENGINEERS STAMP

REGISTERED PROFESSIONAL ENGINEER
19,697PE
OREGON
MAY 5, 1998
BRIAN F. BARNETT

EXPIRES 12-31-19

SHEET
P5

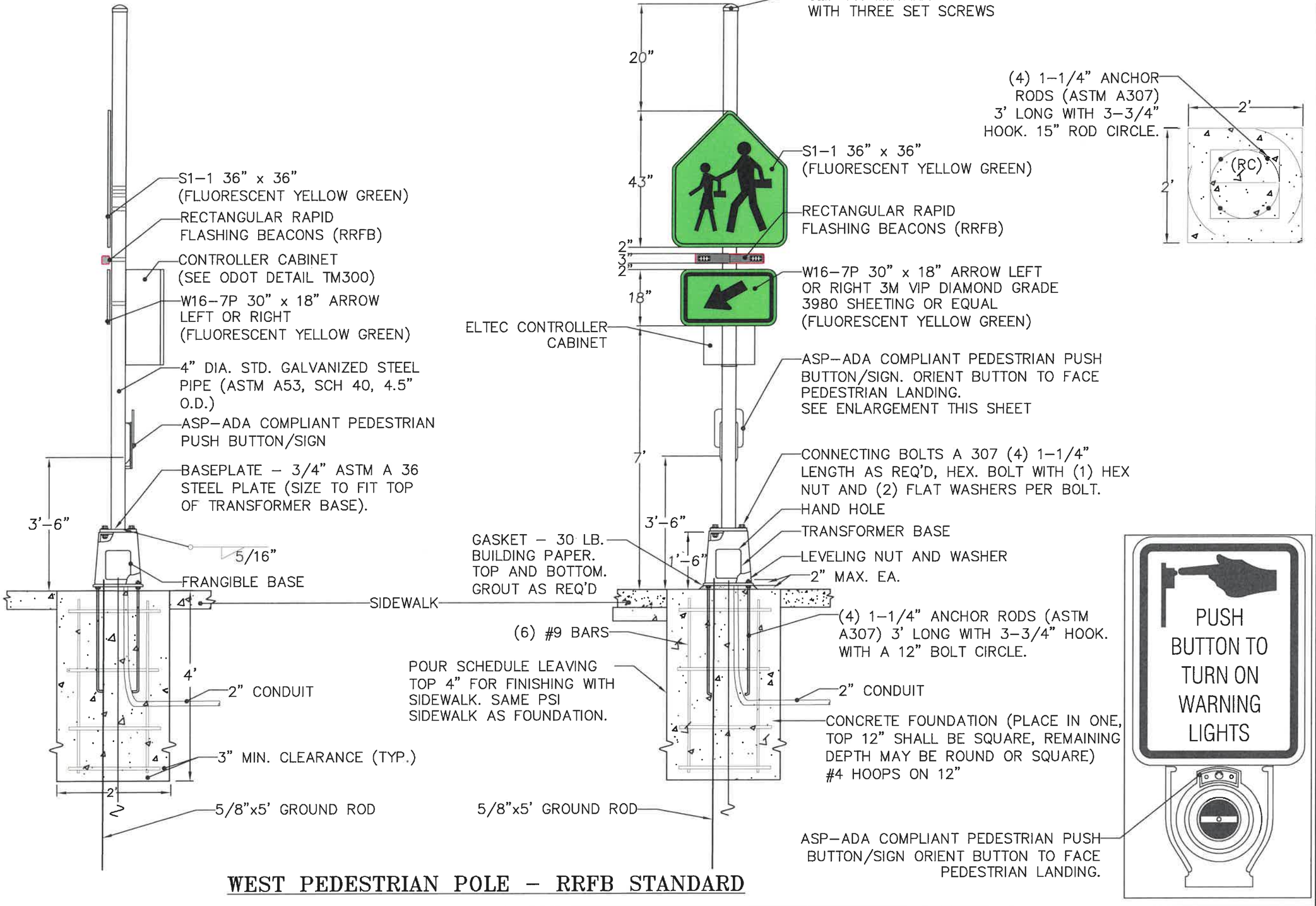

WEST PEDESTRIAN POLE – RRFB STANDARD

No.	Revision/Issue	Date
DRAWN: CJG		

NOTE:

UTILITY LOCATIONS ARE APPROXIMATE
DO NOT
SCALE OR LOCATE UTILITY LINES OR MAINS FROM THESE DRAWINGS
CALL FOR UTILITY LOCATES 811 or (1-800-332-2344)

THE CONTRACTOR SHALL BE RESPONSIBLE FOR DETERMINING UTILITY LOCATIONS PRIOR TO BEGINNING OF CONSTRUCTION. THESE PLANS MAY NOT SHOW ALL UTILITIES OR THE CORRECT LOCATIONS.

P21149 BIKE/PED SAFETY RRFB/CROSSING CONSTRUCTION (S. 32ND STREET PED CROSSING)

City of Springfield
DEVELOPMENT & PUBLIC WORKS / ENGINEERING
225 FIFTH STREET, SPRINGFIELD, OR 97477
PHONE (541) 726-3753 FAX (541) 736-1021
INTERNET www.springfield-or.gov

ENGINEERS STAMP

REGISTERED PROFESSIONAL ENGINEER
19,697PE
OREGON
MAY 5, 1998
BRIAN F. BARNETT

EXPIRES 12-31-19

SHEET
D1

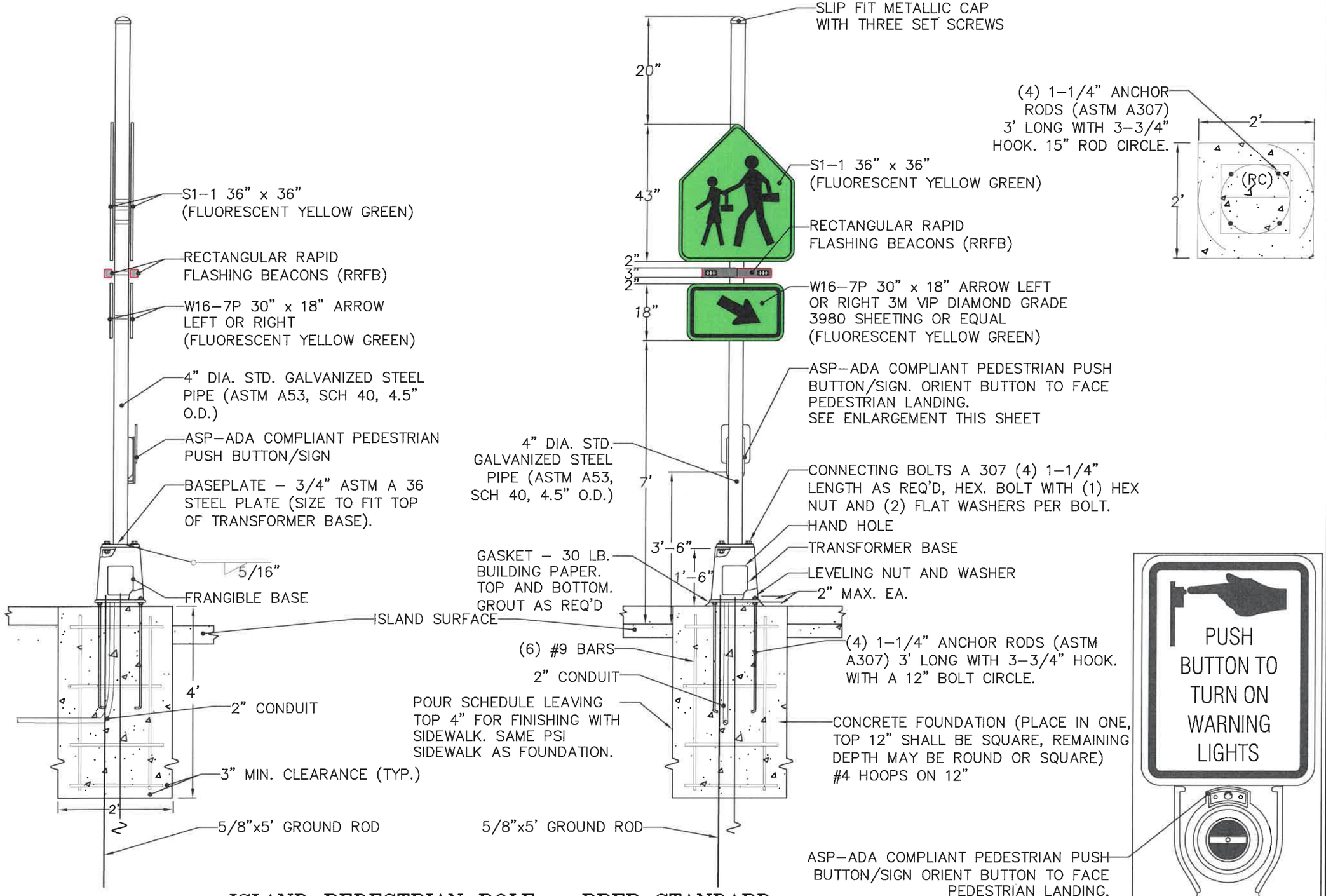

ISLAND PEDESTRIAN POLE – RRFB STANDARD

No.	Revision/Issue	Date
DRAWN: CJG		

NOTE:

UTILITY LOCATIONS ARE APPROXIMATE
DO NOT
SCALE OR LOCATE UTILITY LINES OR MAINS FROM THESE DRAWINGS
CALL FOR UTILITY LOCATES 811 or (1-800-332-2344)

THE CONTRACTOR SHALL BE RESPONSIBLE FOR DETERMINING UTILITY LOCATIONS PRIOR TO BEGINNING OF CONSTRUCTION. THESE PLANS MAY NOT SHOW ALL UTILITIES OR THE CORRECT LOCATIONS.

P21149 BIKE/PED SAFETY RRFB/CROSSING CONSTRUCTION (S. 32ND STREET PED CROSSING)

City of Springfield
DEVELOPMENT & PUBLIC WORKS / ENGINEERING
225 FIFTH STREET, SPRINGFIELD, OR 97477
PHONE (541) 726-3753 FAX (541) 736-1021
INTERNET www.springfield-or.gov

ENGINEERS STAMP

REGISTERED PROFESSIONAL ENGINEER
19,697PE
OREGON
MAY 5, 1998
BRIAN F. BARNETT
EXPIRES 12-31-19

SHEET
D2

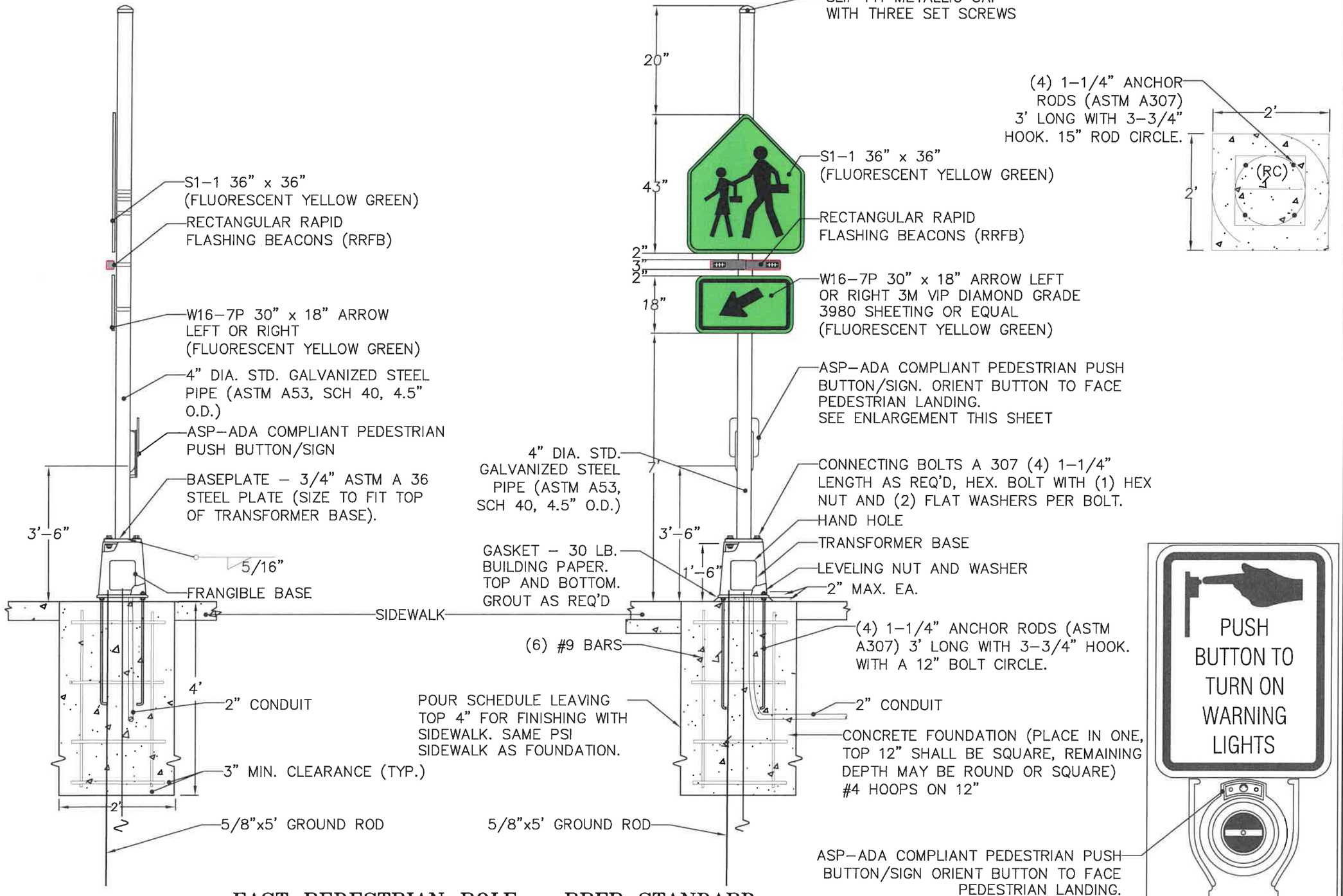

EAST PEDESTRIAN POLE - RRFB STANDARD

No.	Revision/Issue	Date
DRAWN: CJG		

NOTE:

UTILITY LOCATIONS ARE APPROXIMATE
DO NOT
SCALE OR LOCATE UTILITY LINES OR MAINS FROM THESE DRAWINGS
CALL FOR UTILITY LOCATES 811 or (1-800-332-2344)

THE CONTRACTOR SHALL BE RESPONSIBLE FOR DETERMINING UTILITY LOCATIONS PRIOR TO BEGINNING OF CONSTRUCTION.
THESE PLANS MAY NOT SHOW ALL UTILITIES OR THE CORRECT LOCATIONS.

P21149 BIKE/PED SAFETY RRFB/CROSSING CONSTRUCTION (S. 32ND STREET PED CROSSING)

City of Springfield
DEVELOPMENT & PUBLIC WORKS / ENGINEERING
225 FIFTH STREET, SPRINGFIELD, OR 97477
PHONE (541) 726-3753 FAX (541) 736-1021
INTERNET www.springfield-or.gov

ENGINEERS STAMP

REGISTERED PROFESSIONAL ENGINEER
19,695PE
OREGON
MAY 5, 1998
BRIAN F. BARNETT

EXPIRES 12-31-19

SHEET
D3

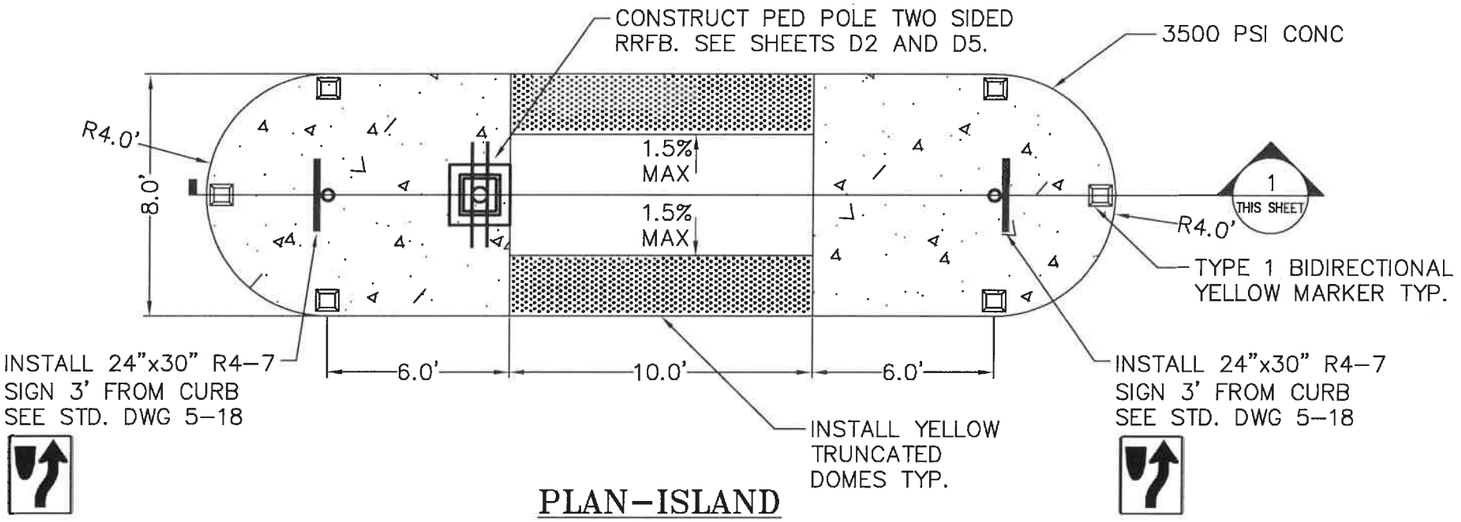

PLAN-ISLAND
NO SCALE

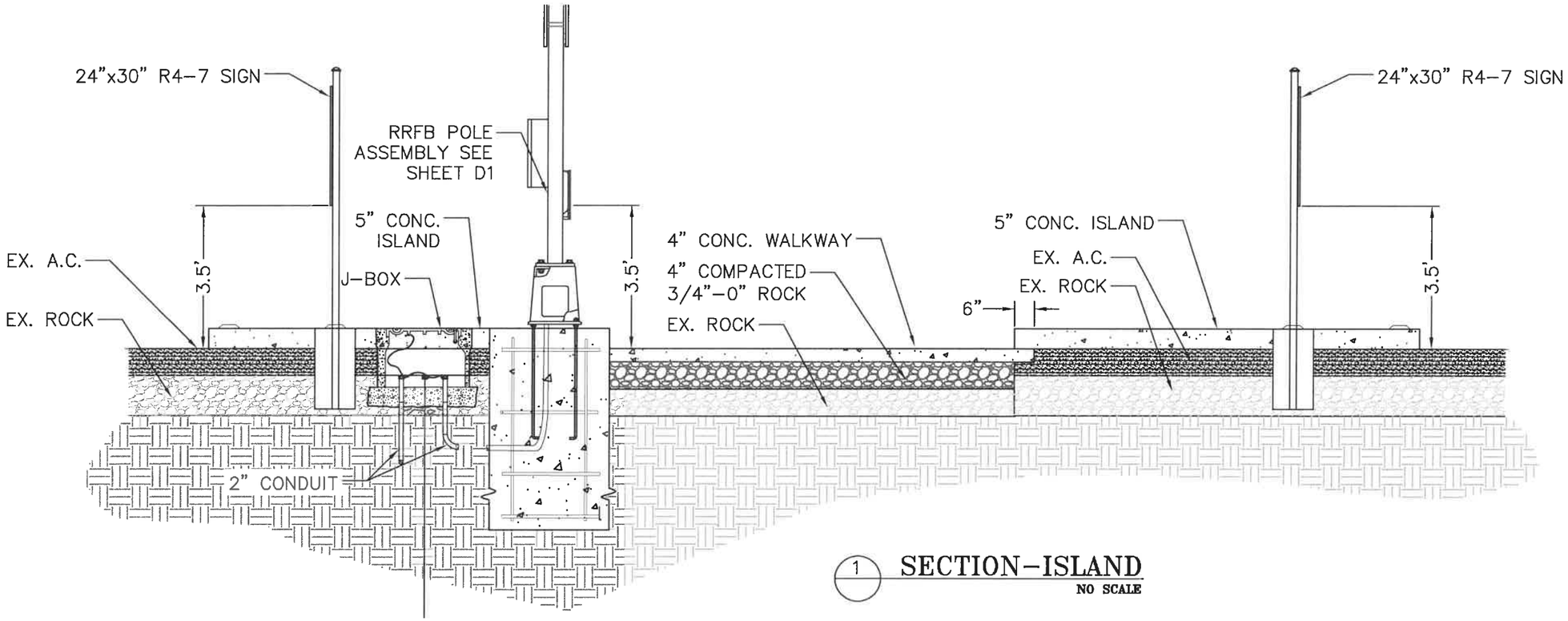

1 SECTION-ISLAND
NO SCALE

No.	Revision/Status	Date
DRAWN: CJG		

NOTE:

UTILITY LOCATIONS ARE APPROXIMATE
DO NOT
SCALE OR LOCATE UTILITY LINES OR MAINS FROM THESE DRAWINGS
CALL FOR UTILITY LOCATES 811 or (1-800-332-2344)

THE CONTRACTOR SHALL BE RESPONSIBLE FOR DETERMINING UTILITY LOCATIONS PRIOR TO BEGINNING OF CONSTRUCTION. THESE PLANS MAY NOT SHOW ALL UTILITIES OR THE CORRECT LOCATIONS.

P21149 BIKE/PED SAFETY RRFB/CROSSING CONSTRUCTION (S. 32ND STREET PED CROSSING)

City of Springfield

DEVELOPEMENT & PUBLIC WORKS / ENGINEERING
225 FIFTH STREET, SPRINGFIELD, OR 97477
PHONE (541) 726-3753 FAX (541) 736-1021
INTERNET www.springfield-or.gov

ENGINEERS STAMP

REGISTERED PROFESSIONAL ENGINEER
19,697PE
OREGON
MAY 5, 1998
BRIAN F. BARNETT
2/17/2019

EXPIRES 12-31-19

SHEET
D4

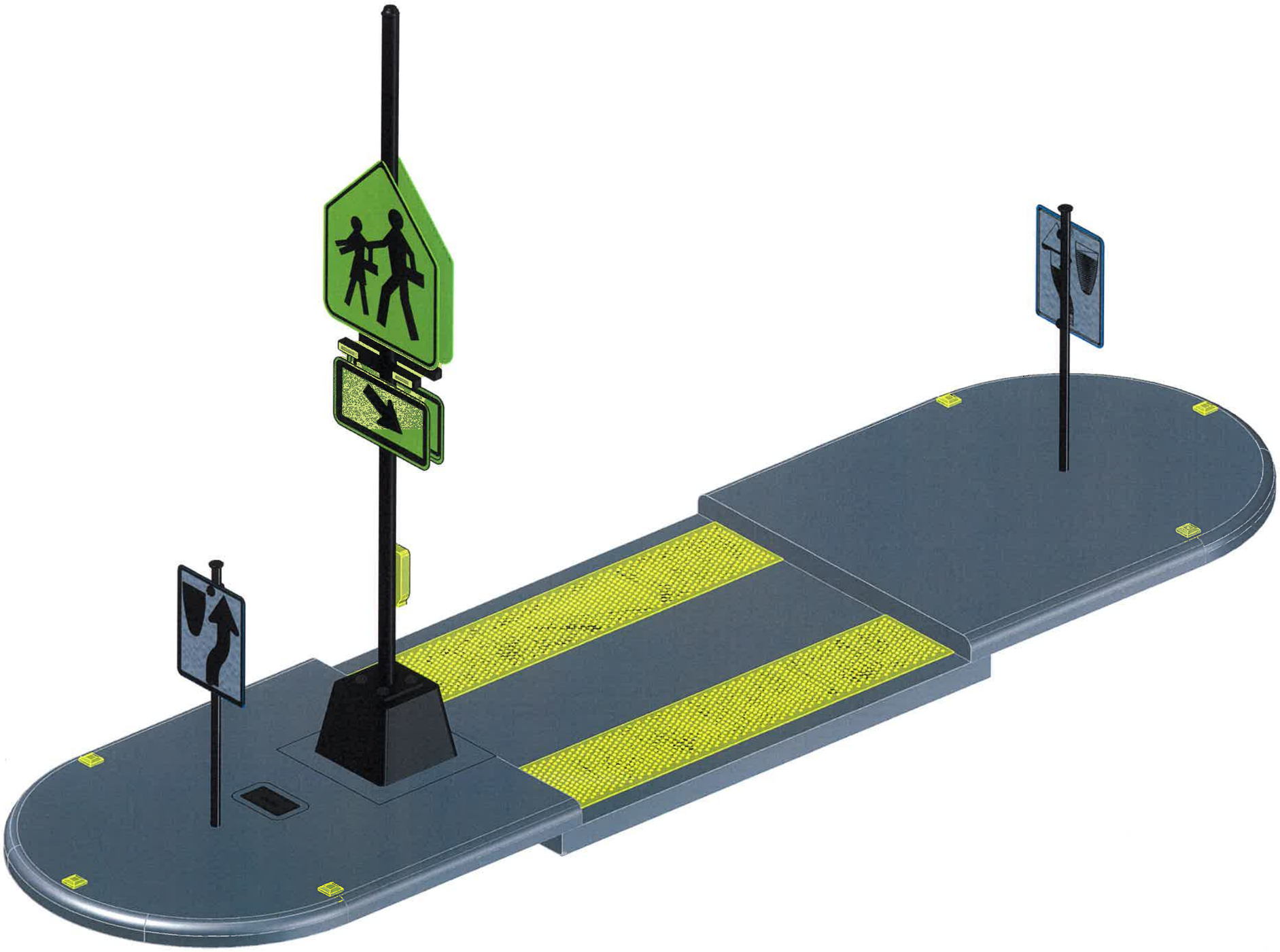

No.	Revision/Issue	Date
DRAWN: CJG		

NOTE:

UTILITY LOCATIONS ARE APPROXIMATE
DO NOT
SCALE OR LOCATE UTILITY LINES OR MAINS FROM THESE DRAWINGS
CALL FOR UTILITY LOCATES 811 or (1-800-332-2344)

THE CONTRACTOR SHALL BE RESPONSIBLE FOR DETERMINING UTILITY LOCATIONS PRIOR TO BEGINNING OF CONSTRUCTION.
THESE PLANS MAY NOT SHOW ALL UTILITIES OR THE CORRECT LOCATIONS.

P21149 BIKE/PED SAFETY RRFB/CROSSING CONSTRUCTION (S. 32ND STREET PED CROSSING)

City of Springfield
DEVELOPEMENT & PUBLIC WORKS / ENGINEERING
225 FIFTH STREET, SPRINGFIELD, OR 97477
PHONE (541) 726-3753 FAX (541) 736-1021
INTERNET www.springfield-or.gov

ENGINEERS STAMP

REGISTERED PROFESSIONAL ENGINEER
19697PE
OREGON
MAY 5, 1998
BRIAN F. BARNETT

EXPIRES 12-31-19

SHEET
D5

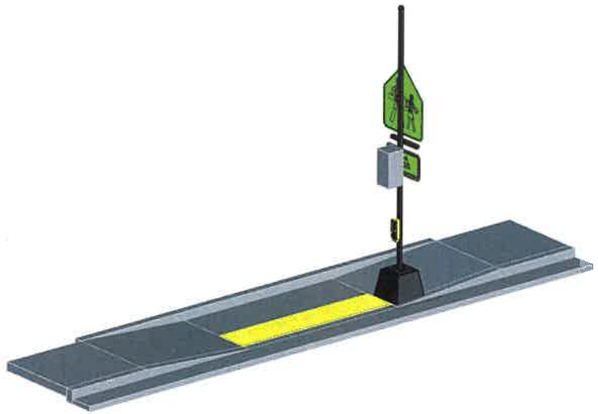

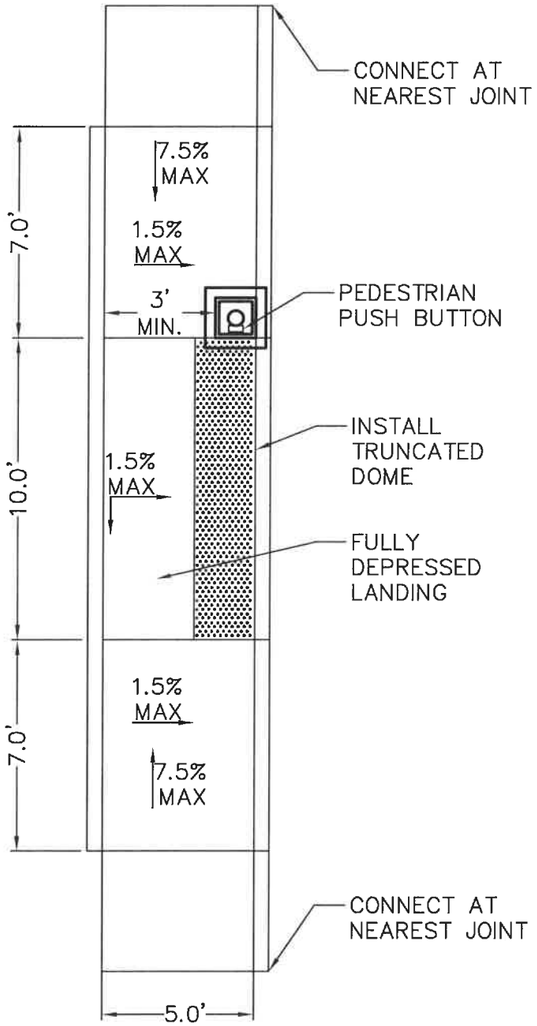

PLAN–WEST RAMP
NO SCALE

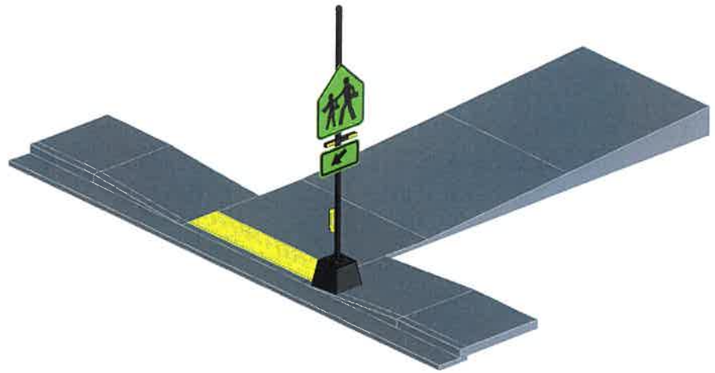

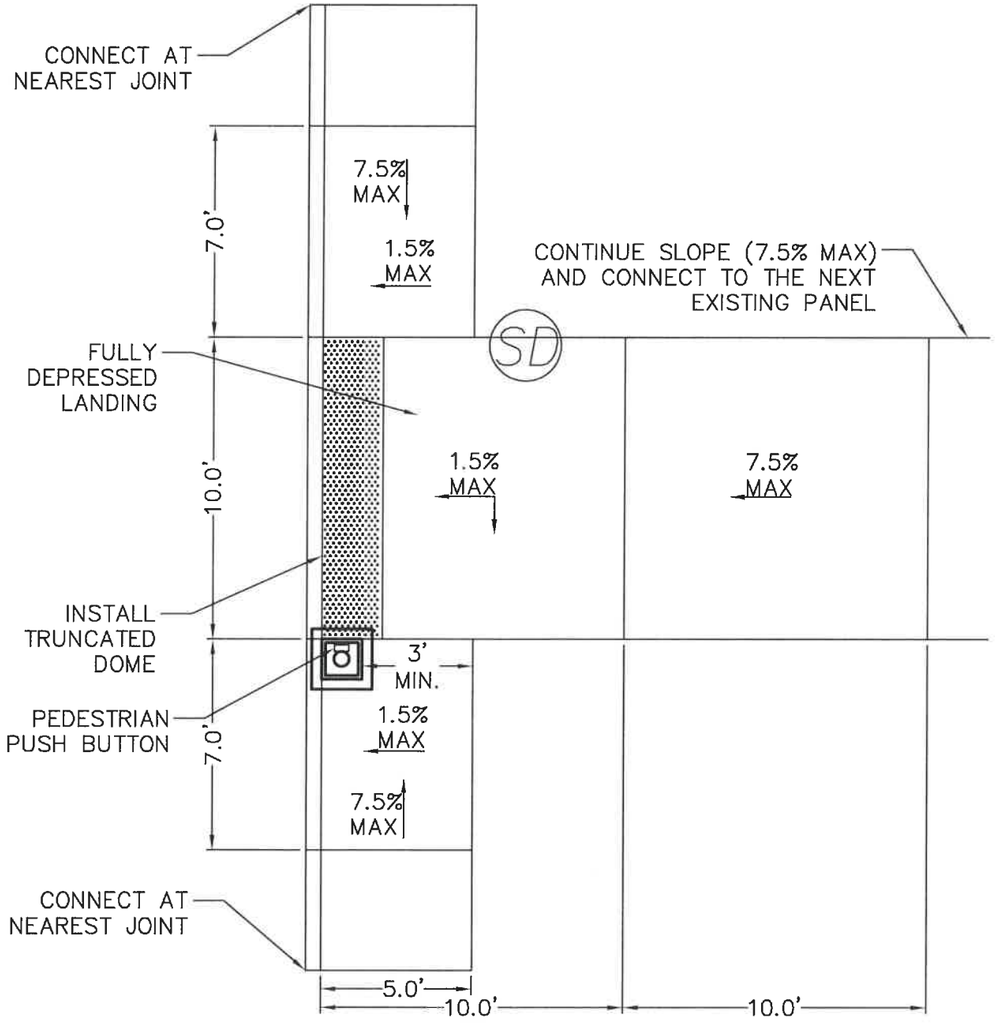

PLAN–EAST RAMP
NO SCALE

No.	Revision/Issue	Date
DRAWN: CJG		

NOTE:

UTILITY LOCATIONS ARE APPROXIMATE
DO NOT
SCALE OR LOCATE UTILITY LINES OR MAINS FROM THESE DRAWINGS
CALL FOR UTILITY LOCATES
811 or (1-800-332-2344)

THE CONTRACTOR SHALL BE RESPONSIBLE FOR DETERMINING UTILITY LOCATIONS PRIOR TO BEGINNING OF CONSTRUCTION.
THESE PLANS MAY NOT SHOW ALL UTILITIES OR THE CORRECT LOCATIONS.

P21149 BIKE/PED SAFETY RRFB/CROSSING CONSTRUCTION
(S. 32ND STREET PED CROSSING)

City of Springfield
DEVELOPEMENT & PUBLIC WORKS / ENGINEERING
225 FIFTH STREET, SPRINGFIELD, OR 97477
PHONE (541) 726-3753 FAX (541) 726-1021
INTERNET www.springfield-or.gov

ENGINEERS STAMP

REGISTERED PROFESSIONAL ENGINEER
64699PE
OREGON
JULY 15, 2003
JEFFREY ALAN PASCHALL

EXPIRATION DATE: 12-31-20

SHEET
D6

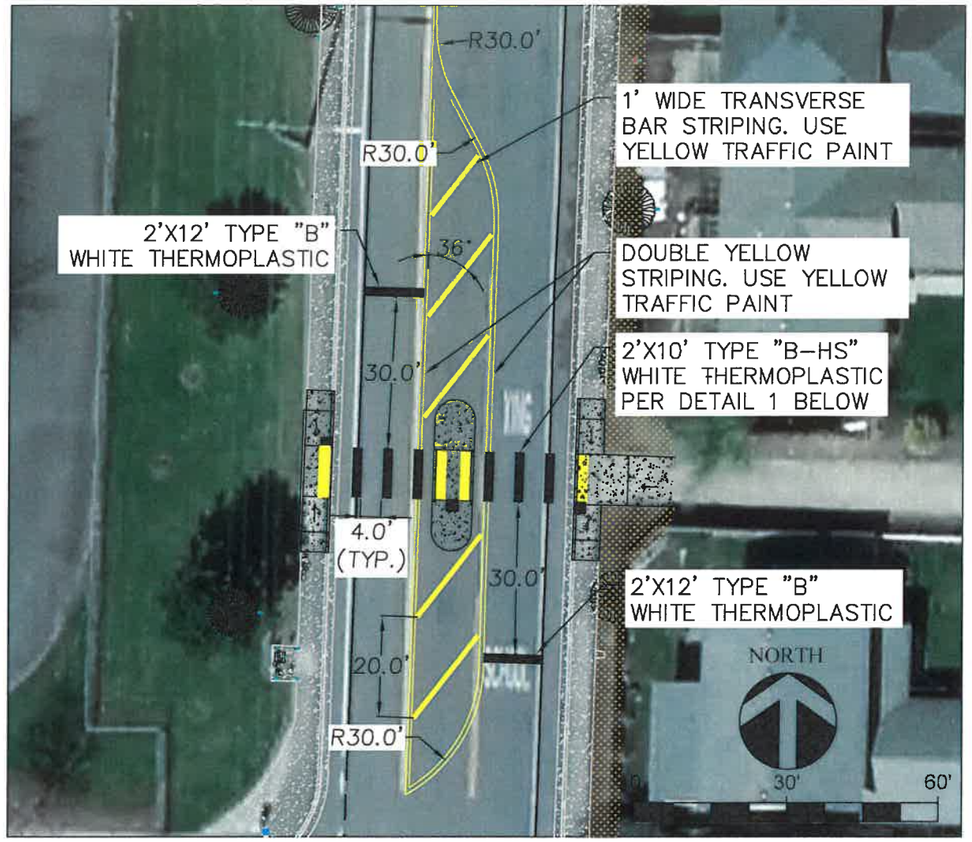

STRIPING DETAIL

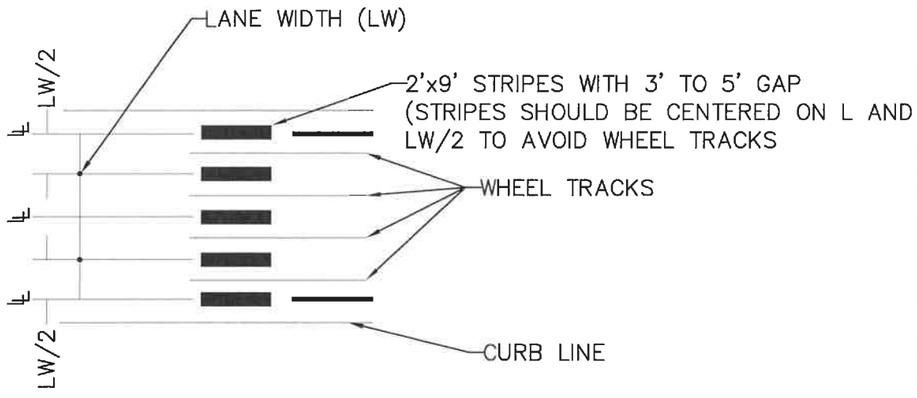

DETAIL 1–STAGGERED CONTINENTAL LAYOUT

GENERAL NOTE:

1. INSTALL CROSSWALK BARS SUCH THAT THE THROAT OF THE ADA RAMP IS ENTIRELY WITHIN CROSSWALK MARKINGS, OR 5' BACK OF EXTENDED FOG LINE, EDGE OF PAVEMENT, OR CURB FACE.

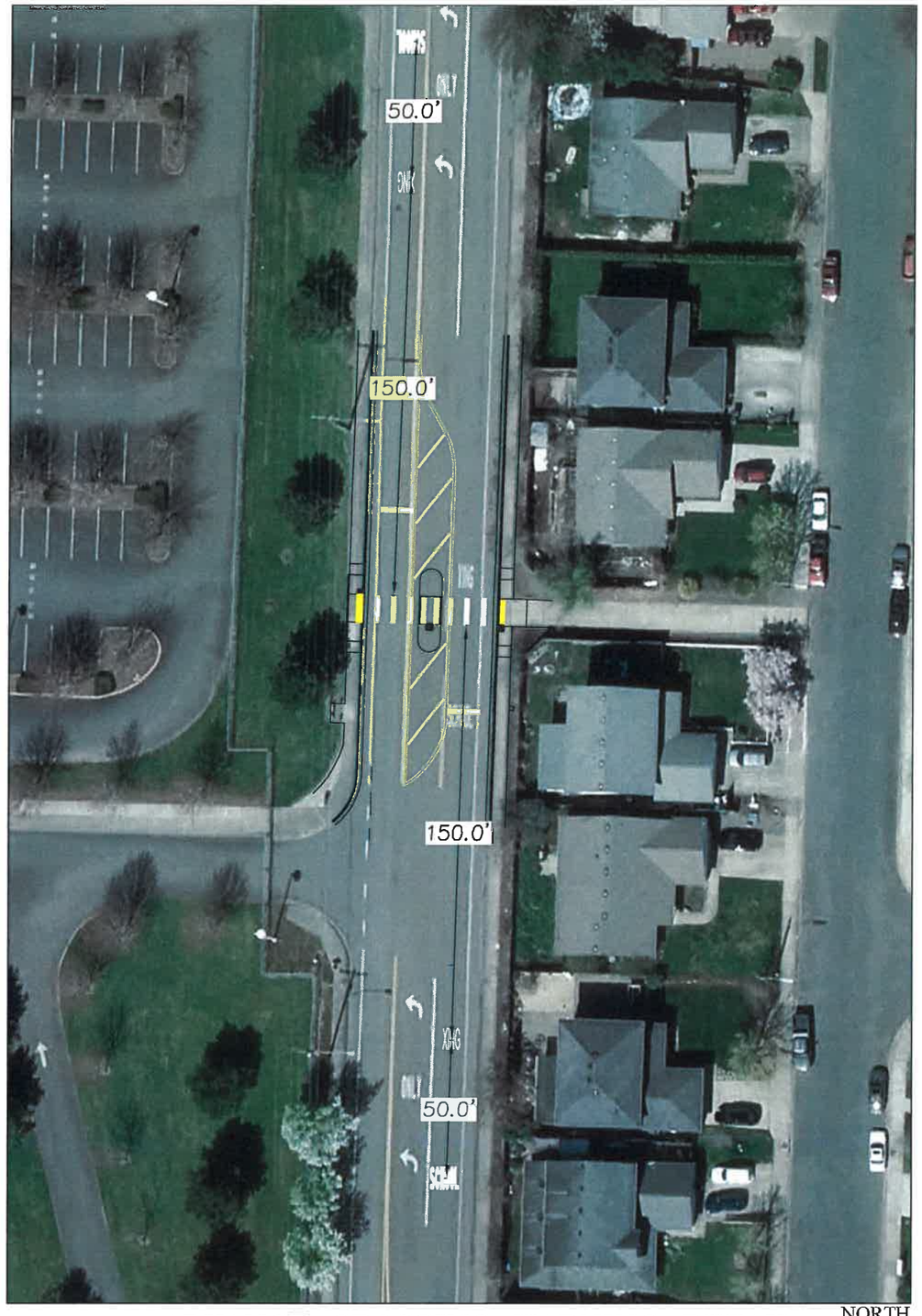

ADVANCE CROSSING WARNING DETAIL

No.	Revision/Issue	Date
DRAWN: CJG		

NOTE:

UTILITY LOCATIONS ARE APPROXIMATE
DO NOT
SCALE OR LOCATE UTILITY LINES OR MAINS FROM THESE DRAWINGS
CALL FOR UTILITY LOCATES 811 or (1-800-332-2344)

THE CONTRACTOR SHALL BE RESPONSIBLE FOR DETERMINING UTILITY LOCATIONS PRIOR TO BEGINNING OF CONSTRUCTION.
THESE PLANS MAY NOT SHOW ALL UTILITIES OR THE CORRECT LOCATIONS.

P21149 BIKE/PED SAFETY RRFB/CROSSING CONSTRUCTION (S. 32ND STREET PED CROSSING)

City of Springfield
DEVELOPEMENT & PUBLIC WORKS / ENGINEERING
225 FIFTH STREET, SPRINGFIELD, OR 97477
PHONE (541) 726-3753 FAX (541) 726-1021
INTERNET www.springfield.or.gov

ENGINEERS STAMP

REGISTERED PROFESSIONAL ENGINEER 19,697PE OREGON MAY 5, 1998 BRIAN F. BARNETT

EXPIRES 12-31-19

SHEET D7

NOTES:

1. PLACE INLET/CATCH BASIN PROTECTION AT EXISTING FIXTURES (SEE DETAIL ON SHEET E2.)

GENERAL NOTES:

1. CONCRETE WASHOUTS ARE NOT PROVIDED ON THIS PROJECT
2. SAW CUTTING SLURRY IS TO BE VACUUMED
3. ANY AREAS OF EXPOSED SOILS. INCLUDING ROADWAY EMBANKMENTS, THAT WILL NOT BE DISTURBED FOR TWO DAYS DURING THE WET SEASON (OCTOBER 1 TO APRIL 30) OR SEVEN DAYS DURING THE DRY SEASON (MAY 1 TO SEPTEMBER 30) SHALL BE IMMEDIATELY STABILIZED WITH AN APPROVED ESC METHOD (SEEDING & MULCHING WITH STRAW, BARK, COMPOST, OR PLASTIC COVERING, ETC.).

EROSION CONTROL STANDARD NOTES:

A. Approval of this Erosion and Sedimentation Control Plan (ESCP) does not constitute an approval of permanent road or drainage design (e.g., size and location of roads, pipes, restrictors, channels, retention facilities, utilities, etc.).

B. Approval of this ESCP does not relieve the permit holder and or the contractor from all other permitting requirements. Prior to beginning construction activities, all other necessary approvals shall be obtained.

C. An inspection of the erosion control measures by City LDAP staff is required prior to any ground disturbance on the site.

D. The erosion and sediment control measures shown on the plan are the minimum requirements for anticipated site conditions. During the construction period, these measures shall be upgraded as needed for unexpected storm events and to ensure that sediment and sediment-laden water does not leave the site.

E. The implementation of the ESCP and the construction, maintenance, replacement, and upgrading of the erosion and sediment control measures is the responsibility of the permit holder and or the contractor until all construction is completed and accepted by the City and vegetation/landscaping is established per the required warranty period.

F. In the event the ESC facilities identified on the ESCP are not functioning properly, the contractor is responsible for immediately implementing changes to the ESCP as directed by the ESCP engineer or his inspector. The engineer, his inspector or the City may stop all construction activity on site until the erosion problem is corrected and all ESC facilities are functioning properly. If the contractor does not immediately implement changes to the ESCP identified by the ESCP engineer or his inspector, the City may implement the necessary changes and require payment from the contractor prior to project acceptance by the City.

G. The boundaries of the clearing limits shown on this plan shall be clearly flagged in the field by the engineer prior to construction. During the construction period, no disturbance beyond the flagged clearing limits shall be permitted. The flagging shall be maintained by the permit holder and or the contractor for the duration of construction.

H. The erosion and sediment control measures on active sites shall be inspected and maintained daily and within the 24 hours after any storm event of greater than 0.5 inches of rain per 24 hour period. Measures shall be inspected by the permit holder and or the contractor after each rainfall and at least daily during prolonged rainfall. Any required repairs or adjustments shall be made immediately. The erosion and sediment control measures on inactive sites shall be inspected a minimum of once every two (2) weeks or within 48 hours following a storm event. Written records shall be kept of weekly reviews of the ESC facilities during the wet season (October 1 to April 30) and of monthly reviews during the dry season (May1 to September 30).

I. All erosion and sediment control measures shall be protected from damage at all times. Control measures shall remain in place until permanent or temporary re-vegetation has been stabilized. Any measure that is damaged or destroyed shall be repaired or replaced immediately.

J. Any areas of exposed soils, including roadway embankments, that will not be disturbed for two days during the wet season (October 1 to April 30) or seven days during the dry season (May 1 to September 30) shall be immediately stabilized with an approved ESC method (seeding & mulching with straw, bark, compost, or plastic covering, etc.).

K. A supply of materials necessary to meet compliance and implement the LDAP or other best management erosion practices under all weather conditions shall be maintained at all times on the construction site.

L. No hazardous substances, such as paints, thinners, fuels and other chemicals shall be released onto the site, adjacent properties, or into water features, the City's storm water system, or related natural resources.

M. Street sweeping shall be performed as needed or when directed by the City inspector to ensure public right-of-ways are kept clean and free of debris. Street flushing is prohibited.

N. When trucking saturated soils from the site, either water-tight trucks shall be used or loads shall be drained on site until dripping has been reduced to no more than one gallon per hour. Sediment laden water will not be allowed to enter the storm water system

O. Extracted ground water from excavated trenches shall be disposed of in a suitable manner without damage to adjacent property, public storm water system, water features, and related natural resources. Approval of a dewatering system does not guarantee that it will meet compliance or be acceptable for use in all situations. Modifications to the dewatering system will be required if compliance can not be met. At no time will sediment laden water be allowed to leave the construction site.

P. At no time shall more than one foot of sediment be allowed to accumulate within a catch basin. All catch basins and conveyance lines shall be cleaned prior to paving. The cleaning operation shall not flush sediment laden water into the downstream system.

Q. Any required stabilized construction entrances and roads shall be installed at the beginning of construction and maintained for the duration of the project. Additional measures, such as wash pads, may be required to ensure that all paved areas are kept clean for the duration of the project.

R. Any permanent flow control facility used as a temporary settling basin shall be modified with the necessary erosion control measures and shall provide adequate storage capacity.

S. Where straw mulch for temporary erosion control is required, it shall be applied at a minimum thickness of two to three inches.

T. In preparation of the wet season, all disturbed areas shall be reviewed to identify which ones can be seeded in preparation for the winter rains. A sketch map of those areas to be seeded and those areas to remain uncovered shall be submitted to the City by September 15. The City can require seeding of additional areas in order to protect surface waters, adjacent properties, or drainage facilities. Disturbed areas identified for seeding shall be seeded prior to the beginning of the wet season (October 1).

No.	Revision/Issue	Date
DRAWN: CJG		

NOTE:

UTILITY LOCATIONS ARE APPROXIMATE
DO NOT
SCALE OR LOCATE UTILITY LINES OR MAINS FROM THESE DRAWINGS
CALL FOR UTILITY LOCATES 811 or (1-800-332-2344)

THE CONTRACTOR SHALL BE RESPONSIBLE FOR DETERMINING UTILITY LOCATIONS PRIOR TO BEGINNING OF CONSTRUCTION. THESE PLANS MAY NOT SHOW ALL UTILITIES OR THE CORRECT LOCATIONS.

P21149 BIKE/PED SAFETY RRFB/CROSSING CONSTRUCTION (S. 32ND STREET PED CROSSING)

City of Springfield

DEVELOPEMENT & PUBLIC WORKS / ENGINEERING
225 FIFTH STREET, SPRINGFIELD, OR 97477
PHONE (541) 726-3753 FAX (541) 736-1021
INTERNET: www.springfield-or.gov

ENGINEERS STAMP

REGISTERED PROFESSIONAL ENGINEER
54699PE
OREGON
JULY 15, 2003
JEFFREY ALAN PASCHALL

EXPIRATION DATE: 12-31-20

SHEET
E1

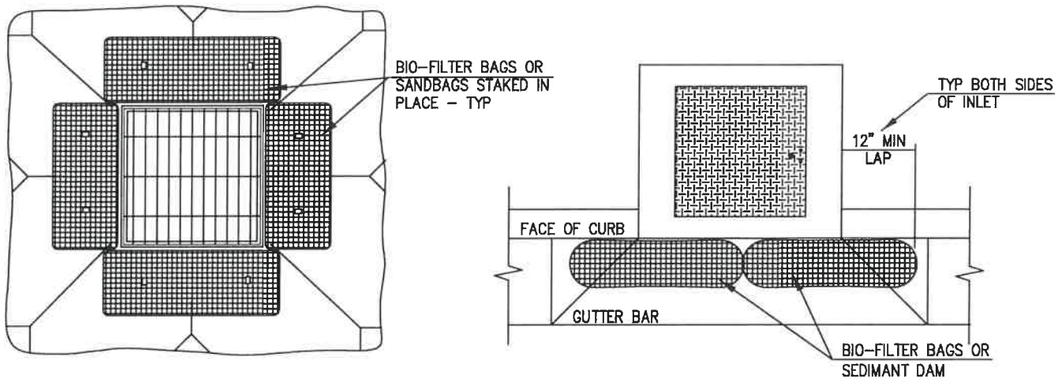

NOTES
1. PRIOR TO 1st PAVEMENT LIFT, REMOVE BIO-BAG/SANDBAG BARRIERS AND INSTALL BASIN INSERT BAG OR CURB INLET SEDIMENT DAM AT ALL INLET STRUCTURES.

1 DRAINAGE INLET STRUCTURE PROTECTION

NO SCALE

INLET PROTECTION

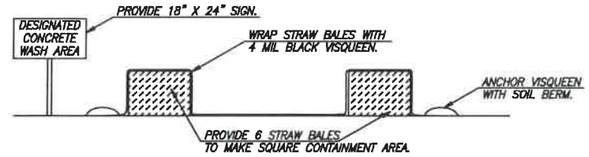

CONCRETE WASH AREA DETAIL

N.T.S.

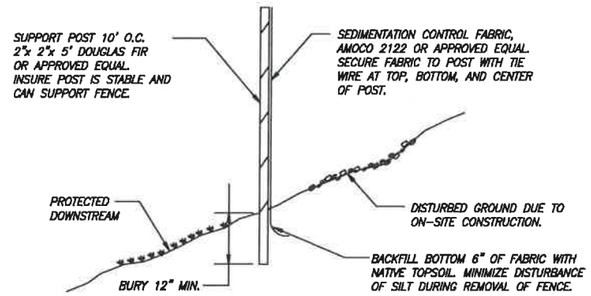

SEDIMENTATION CONTROL FABRIC TYPE SILT FENCE

N.T.S.

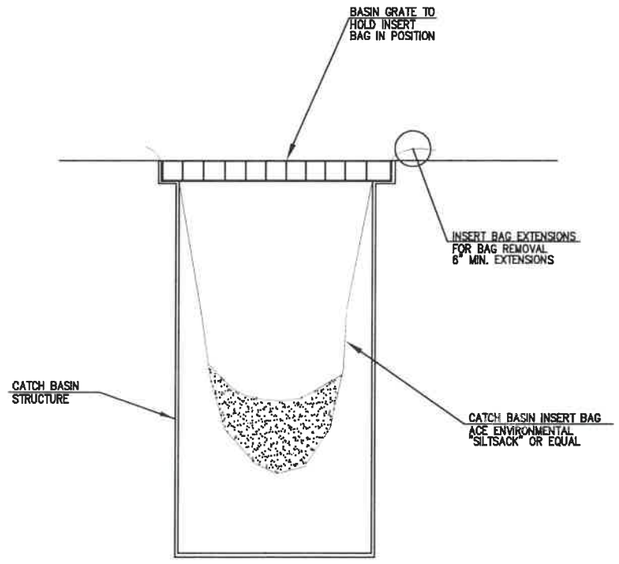

1 CATCH BASIN INSERT BAG

NO SCALE

No	Revision/Issue	Date
DRAWN: CJG		

NOTE:

UTILITY LOCATIONS ARE APPROXIMATE
DO NOT
SCALE OR LOCATE UTILITY LINES OR MAINS FROM THESE DRAWINGS
CALL FOR UTILITY LOCATES
811 or (1-800-332-2344)

THE CONTRACTOR SHALL BE RESPONSIBLE FOR DETERMINING UTILITY LOCATIONS PRIOR TO BEGINNING OF CONSTRUCTION.
THESE PLANS MAY NOT SHOW ALL UTILITIES OR THE CORRECT LOCATIONS.

P21149 BIKE/PED SAFETY RRFB/CROSSING CONSTRUCTION (S. 32ND STREET PED CROSSING)

City of Springfield
DEVELOPEMENT & PUBLIC WORKS / ENGINEERING
225 FIFTH STREET, SPRINGFIELD, OR 97477
PHONE (541) 726-3753 FAX (541) 726-3621
INTERNET www.springfield-or.gov

ENGINEERS STAMP

REGISTERED PROFESSIONAL ENGINEER
54699PE
OREGON
JULY 15, 2003
JEFFREY ALAN PASCHALL

EXPIRATION DATE: 12-31-20

SHEET
E2

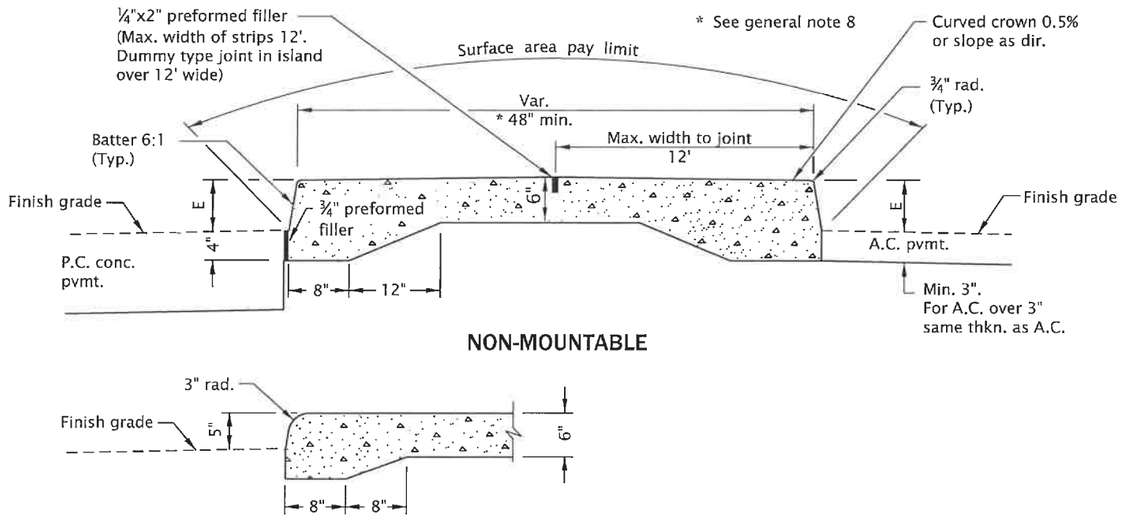

NON-MOUNTABLE

MOUNTABLE
(For surfacing details not shown, see above)

TYPE A

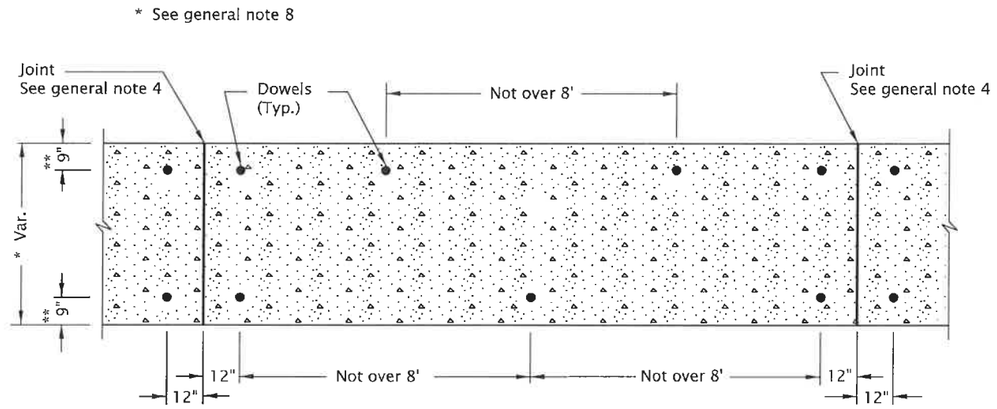

DOWEL PLAN
FOR TYPE C OR TYPE CA ISLANDS & TRANSITIONS
(ON SURFACE OF NEW OR EXISTING PAVEMENT)

** Also see below for type CA island requirement.

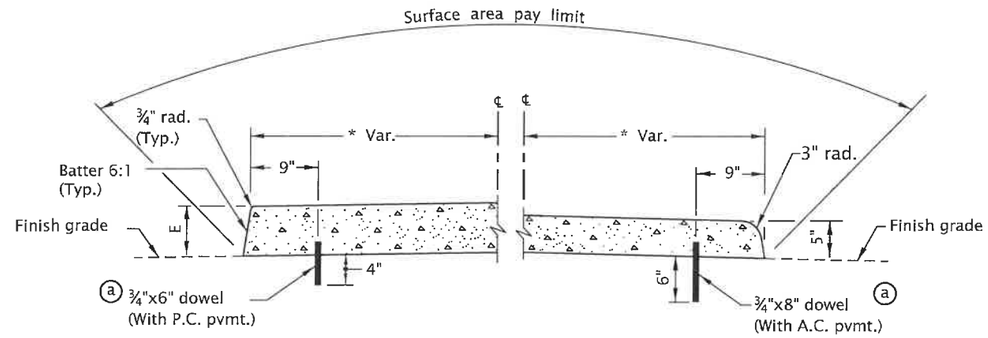

NON-MOUNTABLE **MOUNTABLE**

ⓐ No dowels reqd. for Type C islands 5' wide or wider

TYPE C

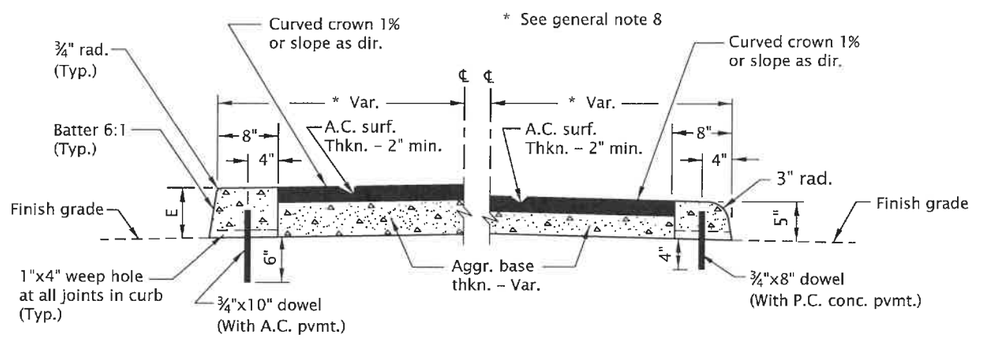

NON-MOUNTABLE **MOUNTABLE**

TYPE CA

GENERAL NOTES FOR ALL DETAILS:

1. Curb exposure "E" = 7" normal. Vary as shown on plans or as directed.
2. Standard batter is shown. Vary as shown on typical section or as directed.
3. Transverse joints in conc. islands to match joints in conc. pvmt. and to be of same type (Omit dowels in expansion joints).
4. Set joint spacing 200' max. for expansion and 15' max. for contraction.
5. Place preformed filler along one side of conc. islands in conc. pvmt. and around all curved ends.
6. Dowels shall be ¾" dia. with length as shown.
   In new conc. pvmt. set dowels before conc. hardens.
   In extg. conc. pvmt. drill holes 1½" dia. and grout dowels in.
   In A.C. pvmt. drive dowels.
7. For transitions to traffic separators, see Std. Dwg. RD706.
8. Minimum island width is 48". For accessible route islands, see Std. Dwg. RD710.

CALC. BOOK NO. N/A

BASELINE REPORT DATE 16-JUL-2018

NOTE: All material and workmanship shall be in accordance with the current Oregon Standard Specifications

The selection and use of this Standard Drawing, while designed in accordance with generally accepted engineering principles and practices, is the sole responsibility of the user and should not be used without consulting a Registered Professional Engineer.

OREGON STANDARD DRAWINGS

ISLANDS

2018

DATE	REVISION DESCRIPTION
07-2018	REVISED NOTES

rd705.dgn 16-JUL-2018

RD705

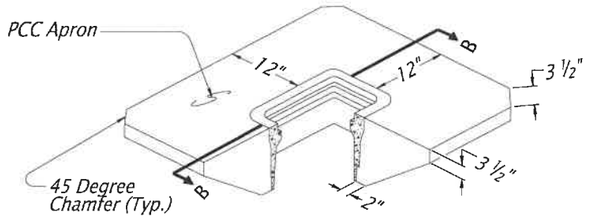

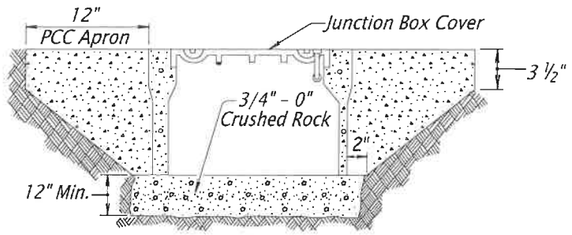

SECTION B-B

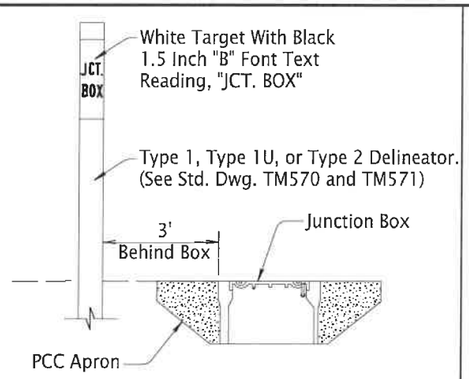

INSTALLATION IN UNSURFACED AREA

(This Detail Only Applicable for Junction Boxes Located In Incidental Travel Areas; Gravel Shoulders, Behind Guardrail, Etc. Do Not Install In Travel Lanes, Paved Shoulders, Or Other Areas Exposed To Traffic.)

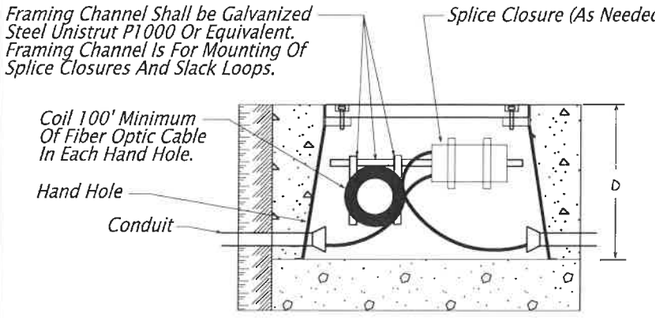

HAND HOLE INSTALLATION

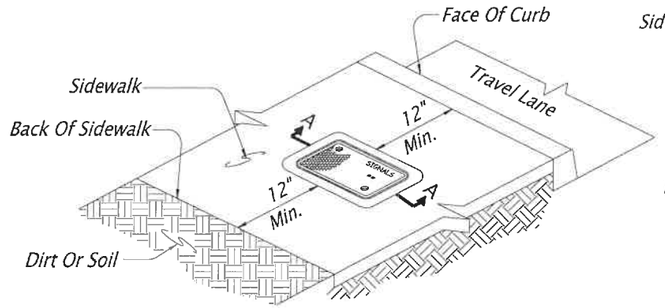

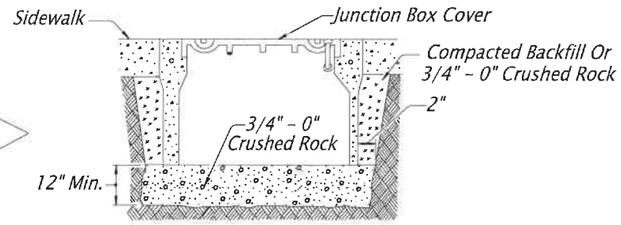

SECTION A-A

INSTALLATION IN PCC SIDEWALK

(This Detail Only Applicable for Junction Boxes Located In Flat Areas Of Sidewalks. Do Not Install In Slopes Of Ramps Or Driveways)

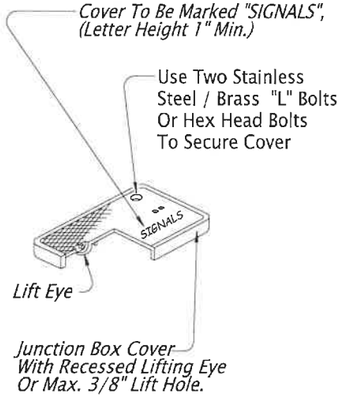

JUNCTION BOX COVER DETAILS

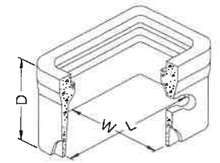

Type*	L	W	D
JB1	17"	10"	12"
JB2	22"	12"	12"
JB3	30"	17"	12"
HH-1	24"	30"	24"
HH-2	30"	48"	24"
HH-3	30"	48"	36"

**Junction Box Or Handhole Type As Shown On Plans*

DIMENSION TABLE

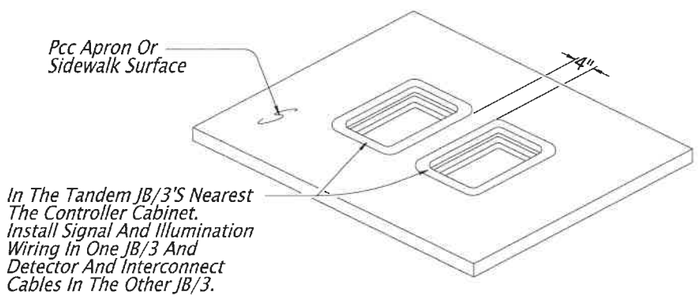

TANDEM JB/3A JUNCTION BOX DETAILS

GENERAL NOTES:

1. Install Top of Junction Box Flush With The Sidewalk, Surrounding Grade, Or Top Of Curb
2. Install Junction Boxes At The Approximate Locations Shown, Or If Not Shown, No More Than 300 Feet Apart
3. More Junction Boxes Than Specified May Be Installed To Facilitate The Work At The Option And Cost Of The Contractor

The selection and use of this Standard Drawing, while designed in accordance with generally accepted engineering principles and practices, is the sole responsibility of the user and should not be used without consulting a Registered Professional Engineer.

CALC. BOOK NO. N/A

BASELINE REPORT DATE 2-Jul-2018

NOTE: All material and workmanship shall be in accordance with the current Oregon Standard Specifications

OREGON STANDARD DRAWINGS

TRAFFIC SIGNAL JUNCTION BOXES/ HAND HOLES

2018

DATE	REVISION DESCRIPTION
07/18	Added A New Detail & Notes, Revised & Simplified Details

TM472

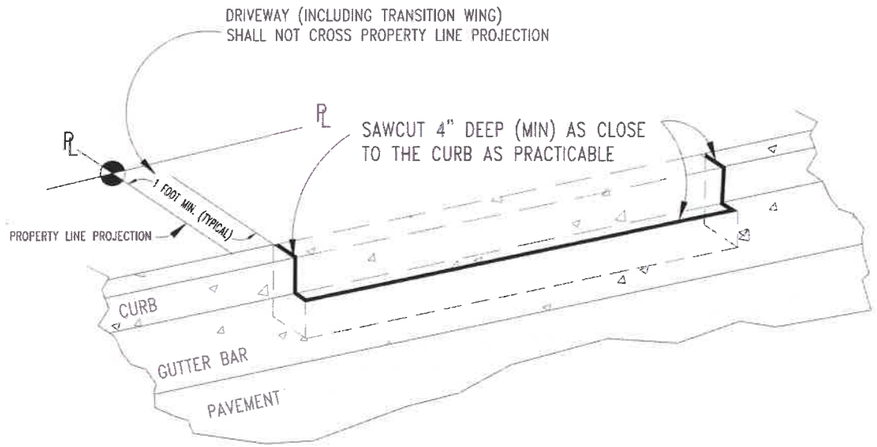

CURB REMOVAL
FOR DRIVEWAY OR RAMP PLACEMENT

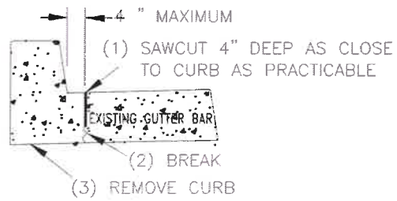

CURB REPLACEMENT
WITH STANDARD CURB

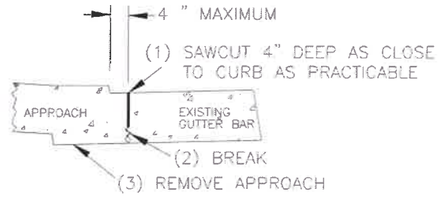

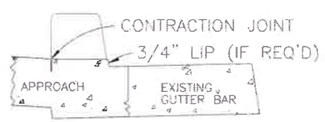

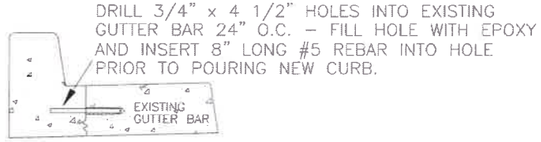

NOTES

* EXISTING GUTTER BAR SHALL NOT BE REMOVED WITHOUT PRIOR APPROVAL BY THE CITY
* CURB CUT WIDTH SHALL BE IN ACCORDANCE WITH PERMIT
* ALTERNATIVELY, CURB CUTS MAY BE SAWED USING THE "PRECISION CUT" METHOD OR EQUIVALENT
* SIDEWALKS, ACCESS RAMPS, AND RESIDENTIAL DRIVEWAYS SHALL BE 3000 PSI FIELD STRENGTH (3450 PSI LAB STRENGTH) 6.0 SACK MIX CONCRETE
* CURBS & COMMERCIAL DRIVEWAYS SHALL BE 3500 PSI FIELD STRENGTH (4025 PSI LAB STRENGTH) 6.3 SACK MIX CONCRETE

NO	REVISION	DATE	BY	APPR.

CITY OF SPRINGFIELD
SPRINGFIELD
DEPT. OF PUBLIC WORKS

CURB
REMOVAL & REPLACEMENT

Jeff Paschall City Engineer 2016

STANDARD DRAWING
3-7

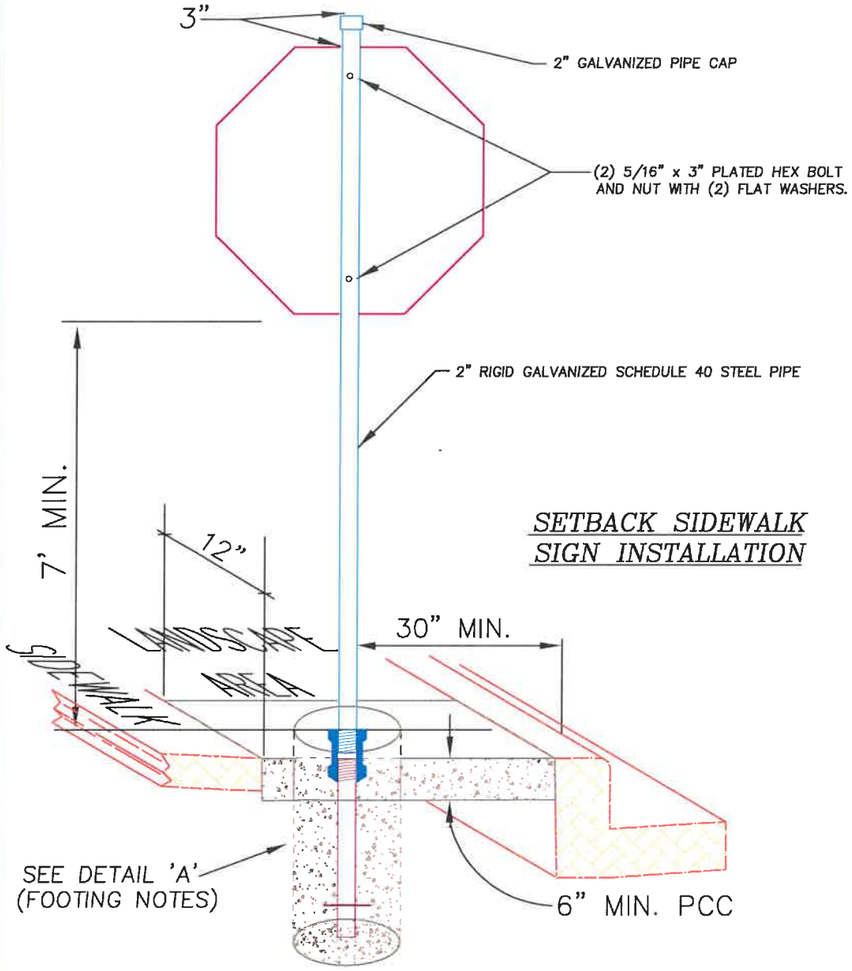

SETBACK SIDEWALK SIGN INSTALLATION

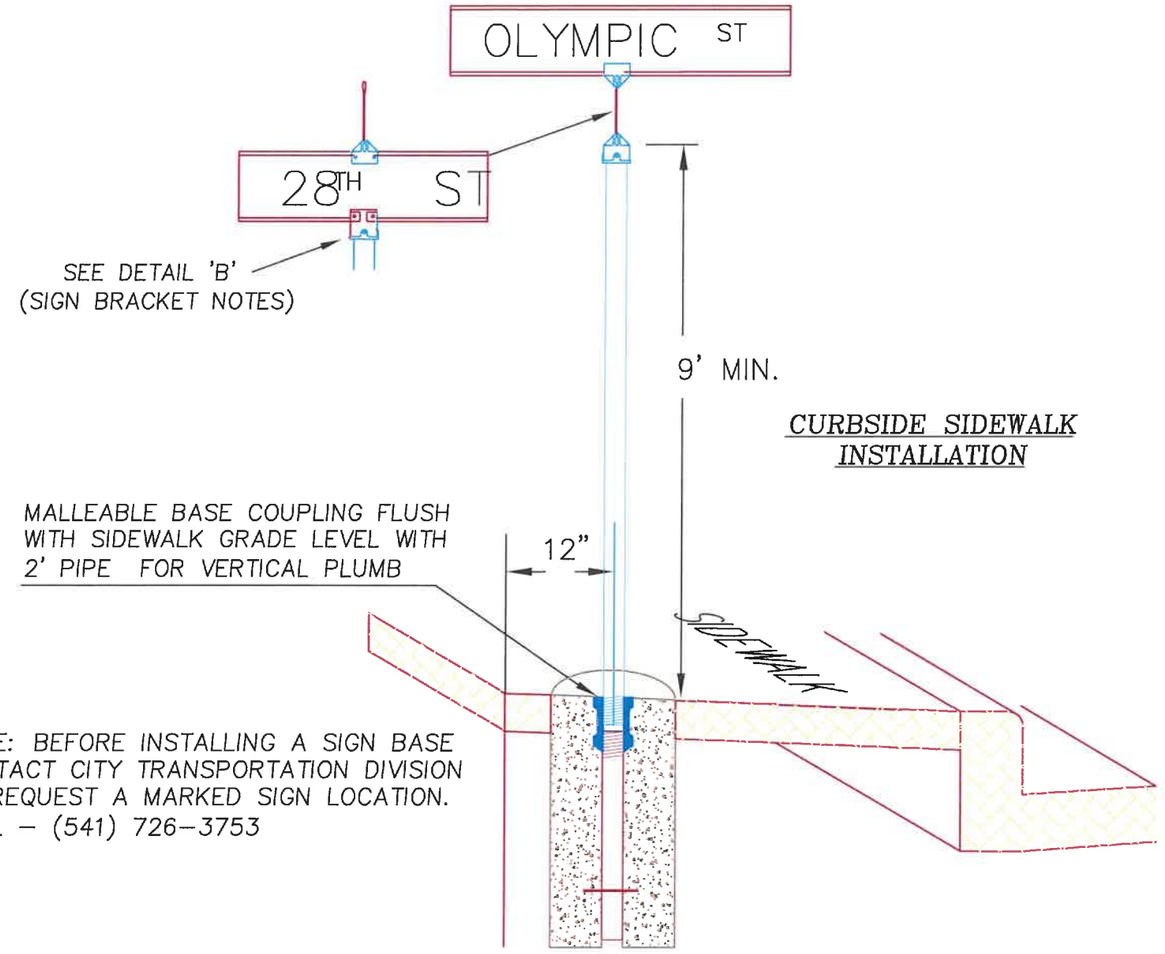

CURBSIDE SIDEWALK INSTALLATION

NOTE: BEFORE INSTALLING A SIGN BASE CONTACT CITY TRANSPORTATION DIVISION TO REQUEST A MARKED SIGN LOCATION. CALL – (541) 726–3753

DETAIL 'A'

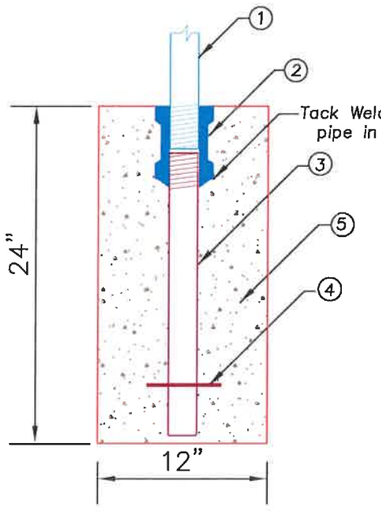

FOOTING INSTALLATION NOTES

1. INSTALL 2" SCHEDULE 40 RIGID GALVANIZED STEEL PIPE.
2. INSTALL 2" THREADED, GALVANIZED, MALLEABLE IRON PIPE COUPLING, (CLASS 150) WITH TOP SET FLUSH AT FINISHED GRADE.
3. INSTALL 2" RIGID GALVANIZED STEEL PIPE TACK WELDED TO COUPLING TO PREVENT TURNING.
4. INSTALL 1/4" X 8" STEEL PIN (Spike) THROUGH STEEL PIPE
5. INSTALL SIGN BASE ASSEMBLY IN CLASS 3300 PORTLAND CONCRETE USING 2' MIN. GUIDE ROD TO INSURE SIGN POST WILL BE VERTICAL.

DETAIL 'B'

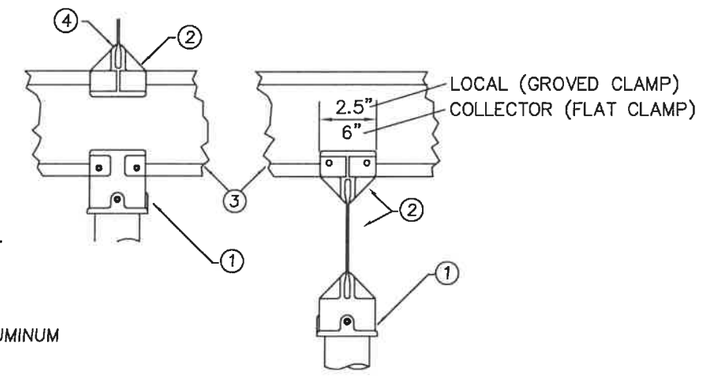

SIGN MOUNTING BRACKET NOTES

1. INSTALL STREET SIGN CAP MOUNT FOR STREET NAME SIGN.
2. INSTALL 90° TOP MOUNT FOR STREET NAME SIGN.
3. INSTALL EXTRUDED or FLAT ALUMINUM STREET NAME SIGN.
4. MOUNTING BRACKETS FOR LOCAL SIGNS SHALL HAVE A GROVED CLAMP TO FIT EXTRUDED SIGNS. MOUNTING BRACKETS FOR COLLECTOR SIGNS SHALL HAVE A FLAT CLAMP TO FIT FLAT SIGNS

NOTE: DRAWING NOT TO SCALE

ALL EYEBOLTS, BOLTS, NUTS, AND WASHERS SHALL BE GALV. STEEL UNLESS NOTED OTHERWISE, ALL SET SCREWS SHALL BE MIN. DIA. 1/4" STAINLESS STEEL WITH SQUARE OR HEX HEADS. ALL SPANWIRE HANGERS AND PLUMBIZERS SHALL BE CAST BRONZE.

NO	REVISION	DATE	BY	APPR.
1	STD. DWG. 5-18	4/94	DRB	
2	SIGN STANDARDS	12/96	DRB	
3	STD. DWG. UPDATE	7/01	D.D.	B.B.
4	STD. DWG. UPDATE	5/11	DRB	B.B.
5	STD. DWG. UPDATE	8/11	DRB	B.B.

BY DATE
DRAWN: M. ABARCA 5/93
DESIGNED:
CHECKED:
APPROVED:
FILENAME: TSD5_18

CITY OF SPRINGFIELD
DEPT. OF PUBLIC WORKS
TRANSPORTATION DIVISION
225 FIFTH STREET
SPRINGFIELD, OR. 97477
(541) 726-3753

SPRINGFIELD TRANSPORTATION DIVISION

ROADSIDE SIGN INSTALLATION DETAIL

STANDARD DRAWING

5–18

P21149 BIKE/PED SAFETY RRFB/CROSSING CONSTRUCTION
(51ST STREET RAISED CROSSING PORTION)

PROJECT DESCRIPTION

THIS PORTION (3 OF 4) OF THE PROJECT WILL CONSIST OF CONSTRUCTING A PEDESTRIAN CROSSING WITH A MEDIAN ISLAND RRFB FLASHING LIGHTS AND STRIPING ON S 32ND STREET NEAR AGNES STEWART MIDDLE SCHOOL. THIS PORTION OF THE PROJECT WAS DESIGNED UNDER P41051 51ST STREET RAISED CROSSING.

LEGEND

- RIGHT OF WAY (ROW) LINE — ROW
- GAS LINE — GAS — GAS
- FIBER OPTIC (NO. OF CABLES) — FO
- WATER LINE — W
- POWER (ELECTRIC) — E — E
- STORM SEWER (EXISTING) — SD — SD
- SANITARY SEWER (EXISTING) — SS — SS
- COMMUNICATION LINE (EXISTING) — COM — COM
- TV LINE (EXISTING) — TV
- GAS VALVE
- WATER VALVE
- FIRE HYDRANT
- WATER METER
- UTILITY BOX
- POWER POLE/LIGHT
- CATCH BASIN (EXISTING)
- CURB INLET (NEW)
- STORM MANHOLE (NEW) (SD)
- SANITARY MANHOLE (EXISTING) (SS)
- SANITARY MANHOLE (NEW) (SS)
- STORM AREA DRAIN (NEW)
- MAIL BOX (MB)
- UTILITY POLE

ABBREVIATIONS

AC	ASPHALTIC CONCRETE	G	GAS	RCP	REINFORCED CONCRETE PIPE
ABAN	ABANDON(ED)	GALV	GALVAIZED	RD	ROAD
ADA	AMERICANS W/ DISABILITIES ACT	GR	GRADE	RDCR	REDUCER
		GRVL	GRAVEL	REINF	REINFORCE(D)(ING)(MENT)
AL	ALUMINUM	GV	GATE VALVE	RESTR	RESTRAIN(ED)
APPROX	APPROXIMATE			REQ'D	REQUIRED
APPVD	APPROVED	HORIZ	HORIZONTAL	ROW	RIGHT OF WAY
ASSY	ASSEMBLY	HWY	HIGHWAY		
ARV	AIR RELEASE VALVE	HP	HIGH PRESSURE	SCHED	SCHEDULE
				SD	STORM DRAIN
BLDG	BUILDING	ID	INSIDE DIAMETER	SERV	SERVICE
BM	BENCHMARK	IE	INVERT ELEVATION	SHT(S)	SHEETS
BO	BLOWOFF	INSTL	INSTALL	SL	SLOPE
BTM	BOTTOM			SPECS	SPECIFICATIONS
		LDAP	LAND & DRAINAGE ALTERATION PERMIT	SPL	SPOOL
C/L	CENTER LINE			SQ	SQUARE
CB	CATCH BASIN	LAT	LATERAL	SQ FT	SQUARE FOOT
CCP	CONCRETE CULVERT PIPE	LF	LINEAL FEET	SS	SANITARY SEWER
		LP	LOW PRESSURE	SST	STAINLESS STEEL
CI	CAST IRON			ST	STREET
CG	CURB/GUTTER	MATL(S)	MATERIAL(S)	STA	STATION
CL	CLASS	MAX	MAXIMUM	STL	STEEL
CO	CLEANOUT	MFR(S)	MANUFACTURER(S)	STD	STANDARD
CON(C)	CONCRETE	MH(S)	MANHOLE(S)	SUB	SPRINGFIELD UTILITY BOARD
CONST	CONSTRUCTION	MHSD	MANHOLE STORM DRAIN	S/W	SIDEWALK
COP	COPPER	MHSS	MANHOLE SANITARY SEWER	TEL/T	TELEPHONE
COS	CITY OF SPRINGFIELD			TB	THRUST BLOCK
CPLG	COUPLING	MIN	MINIMUM	TEMP	TEMPORARY
CR	CRUSHED ROCK	MJ	MECHANICAL JOINT	THK	THICK
CV	CHECK VALVE	MUTCH	MANUAL ON UNIFORM TRAFFIC CONTROL DEVICES	THRU	THROUGH
CY	CUBIC YARD			TV	TELEVISION
				TYP	TYPICAL
D	DRAIN				
DET	DETAIL	NTS	NOT TO SCALE	VERT	VERTICAL(LY)
DI	DUCTILE IRON				
DIA/ø	DIAMETER	OC	ON CENTER	W	WATER
DR	DRIVE	OD	OUTSIDE DIAMETER	W/	WITH
DWG	DRAWING	ODOT	OREGON DEPARTMENT OF TRANSPORTATION	W/IN	WITHIN
DWY	DRIVEWAY			W/O	WITHOUT
		OVHD	OVERHEAD UTILITY	W/M	WATER METER
EA	EACH				
EL	ELEVATION	P	POWER		
ELEC/E	ELECTRICAL	PCC	PORTLAND CEMENT CONCRETE		
EOP	EDGE OF PAVEMENT				
EQ	EQUAL	PE	PLAIN END		
EQUIP	EQUIPMENT	PERM	PERMANENT		
ESMT	EASEMENT	P/L	PROPERTY LINE		
EX	EXISTING	POLY	POLYETHYLENE		
		PROP	PROPOSED		
FAB	FABRICATE	PRESS	PRESSURE		
FD	FLOOR DRAIN	PROP	PROPOSED		
FH	FIRE HYDRANT	PS	PUMP STATION		
FIN GR	FINISHED GRADE	PUGD	UNDERGROUND POWER		
FL	FLOW LINE	PV	PLUG VALVE		
FLG	FLANGE(D)	PVC	POLYVINYL CHLORIDE		
FM	FORCE MAIN	PVMT	PAVEMENT		
FT	FOOT				
FTG	FITTING				

VICINITY MAP

SHEET INDEX

TITLE SHEET	SHT. 1
GENERAL CONSTRUCTION NOTES	SHT. 2
DEMOLITION PLAN	SHT. 3
CONSTRUCTION PLAN	SHT. 4
SIGN AND STRIPING PLAN	SHT. 5
PROPOSED ELEVATIONS	SHT. 6
PROFILE AND CATCH BASIN DETAIL (4-11)	SHT. 7
ROADSIDE SIGN INSTALLATION DETAIL (5-18)	SHT. 8
CURB AND GUTTER REMOVAL AND REPLACEMENT DETAIL (3-8)	SHT. 9
EROSION CONTROL NOTES	SHT. 10
EROSION CONTROL	SHT. 11

No.	Revision/Issue	Date
DRAWN: CJG		

NOTE:

UTILITY LOCATIONS ARE APPROXIMATE
DO NOT
SCALE OR LOCATE UTILITY LINES OR MAINS FROM THESE DRAWINGS
CALL FOR UTILITY LOCATES 811 or (1-800-332-2344)

THE CONTRACTOR SHALL BE RESPONSIBLE FOR DETERMINING UTILITY LOCATIONS PRIOR TO BEGINNING OF CONSTRUCTION.
THESE PLANS MAY NOT SHOW ALL UTILITIES OR THE CORRECT LOCATIONS.

P21149 BIKE/PED SAFETY RRFB/CROSSING CONSTRUCTION
(51ST STREET RAISED CROSSING PORTION)

City of Springfield

PUBLIC WORKS / ENGINEERING
225 FIFTH STREET, SPRINGFIELD, OR 97477
PHONE (541) 726-3753 FAX (541) 736-3689
INTERNET www.springfield-or.gov

REGISTERED PROFESSIONAL ENGINEER
54699PE
OREGON
JULY 15, 2003
JEFFREY ALAN PASCHALL
7/20/19

EXPIRATION DATE: 12-31-20

SHEET 1

GENERAL CONSTRUCTION NOTES:

A. ALL MATERIALS AND WORKMANSHIP WITHIN THE PUBLIC RIGHT-OF-WAY OR PUBLIC EASEMENTS SHALL MEET STANDARD SPECIFICATIONS FOR CONSTRUCTION, AS SPECIFIED IN SECTION 'A' OF THE SPECIAL PROVISIONS IN ADDITION TO ALL OTHER SPECIFICATIONS REFERENCED OR INCLUDED, AND IN ADDITION TO THESE PLANS.

B. OREGON LAW REQUIRES THE CONTRACTOR TO FOLLOW RULES ADOPTED BY THE OREGON UTILITY NOTIFICATION CENTER. THESE RULES ARE SET FORTH IN OAR 952-001-0010 THROUGH OAR 952-001-0100. THE CONTRACTOR MAY OBTAIN COPIES OF THE RULES BY CALLING THE CENTER. NOTE: THE TELEPHONE NUMBER FOR THE OREGON UTILITY NOTIFICATION CENTER IS (800) 332-2344 OR 811.

C. LOCATION AND/OR DEPTH OF EXISTING UTILITIES SHOWN ON PLANS ARE APPROXIMATE. ALL UTILITIES MAY NOT APPEAR ON PLANS. IT IS THE CONTRACTOR'S RESPONSIBILITY TO CONTACT ALL UTILITY COMPANIES FOR UNDERGROUND LOCATION OF FACILITIES AT LEAST 48 HOURS PRIOR TO EXCAVATING OR "POTHOLING". THE "ONE-CALL" NUMBER IS 332-2344 OR 811.

D. CONTRACTOR SHALL BE RESPONSIBLE FOR COORDINATION WITH UTILITY COMPANIES ON THE TIMING OF INSTALLATION OF THEIR FACILITIES.

E. SPRINGFIELD CODE 10.2.1 REQUIRES NOTIFICATION OF OPEN TRENCHING FOR THE PROJECT TO ALLOW POSSIBLE COMMUNICATION CABLE INSTALLATION.

F. THE CONTRACTOR SHALL PROVIDE ALL TRAFFIC CONTROL DEVICES NECESSARY TO PROTECT AND SAFEGUARD THE PUBLIC AND WORKERS AGAINST INJURY AND PROTECT THE WORK AGAINST DAMAGE. ALL TEMPORARY TRAFFIC CONTROL SIGNING AND DEVICES SHALL BE IN PLACE PRIOR TO BEGINNING WORK. ALL TRAFFIC CONTROL SHALL CONFORM TO THE MANUAL ON UNIFORM TRAFFIC CONTROL DEVICES FOR STREETS AND HIGHWAYS (MUTCD), CURRENT EDITION, AS SUPPLEMENTED AND AMENDED BY THE OREGON SUPPLEMENTS. FLAGGING SHALL BE PERFORMED AS SHOWN IN THE "OREGON TEMPORARY TRAFFIC CONTROL HANDBOOK FOR OPERATIONS OF THREE DAYS OR LESS", 2011 OR CURRENT EDITION. THE CONTRACTOR SHALL BE RESPONSIBLE FOR ANY REQUIRED TRAFFIC CONTROL AS FIELD CONDITIONS WARRANT. THE CONTRACTOR SHALL SUBMIT A TRAFFIC CONTROL PLAN AT THE PRE-CONSTRUCTION CONFERENCE FOR CITY REVIEW AND APPROVAL.

G. ALL SANITARY AND STORM SEWER CONNECTIONS TO EXISTING CITY OWNED FACILITIES (PIPE, CATCH BASINS, MANHOLES, ETC.) SHALL BE INSPECTED BY THE CONTRACTOR AND THE CITY'S PUBLIC WORKS MAINTENANCE DEPARTMENT PRIOR TO HOOK UP. CONTACT MAINTENANCE AT (541-726-3761) OR CITY CONSTRUCTION INSPECTOR NO LESS THAN 48 HOURS PRIOR TO DESIRED INSPECTION TIME.

H. WHERE CONNECTING TO AN EXISTING PIPE, THE CONTRACTOR SHALL EXPOSE THE END OF THE EXISTING PIPE AND ALLOW THE ENGINEER TO VERIFY EXACT LOCATION AND ELEVATION, CONDITION, AND POSITIVE FLOW BEFORE LAYING ANY NEW PIPE IN THAT SYSTEM.

I. THE SEWER GRADE SHALL BE PER THE PLANS AND SPECIFICATIONS AND WITH THE MINIMUM COVER AS SHOWN ON THE PLANS.

J. THE CONTRACTOR SHALL INTERNALLY TELEVISION INSPECT THE SEWER AFTER ALL BACKFILL AND BEFORE THE FINAL LIFT OF ASPHALT PAVING. THE CONTRACTOR SHALL SUPPLY THE CITY WITH A WRITTEN T.V. REPORT AND VIDEO TAPE OR DVD FOR CITY APPROVAL AT LEAST 2 WORKING DAYS BEFORE THE PRE-PAVING MEETING.

K. CONTRACTOR TO SCHEDULE A PRE-PAVING CONFERENCE 24 HOURS PRIOR TO PAVING. CONTACT THE CONSTRUCTION INSPECTOR.

L. ALL JOINTS BETWEEN EXISTING AND NEW ASPHALT PAVING SHALL BE SEALED WITH POLYMERIZED ASPHALT AND SANDED TO PREVENT PICK UP.

M. COMPACTION REQUIREMENTS:

LAYER	RATE	TEST
SUBGRADE	95%	T99
CRUSHED ROCK	95%	T180
ASPHALT (LOCAL)	90%	RICE
ASPHALT (COLLECTOR/ARTERIAL)	92%	RICE

N. CONCRETE COMPRESSIVE STRENGTH REQUIREMENTS (PSI):

CONCRETE USE	FIELD	LABORATORY
SIDEWALK/ADA RAMPS	3000	3450
CURBS/GUTTERS	3500	4025
DRIVEWAYS	3500	4025
PAVEMENT	4000	4600

O. THIS PROJECT SHALL COMPLY WITH THE AMERICAN DISABILITIES ACT REQUIREMENTS SUCH AS INCORPORATION OF DESIGN CRITERIA FOR RAMPS, MAXIMUM PROFILE AND CROSS SECTION SLOPES FOR SIDEWALKS, UPGRADING EXISTING FACILITIES WHERE MAJOR CONSTRUCTION IS OCCURRING, AND BUILDING WARNING FOR OBJECTS IN SIDEWALK SUCH AS CURBING OR LANDSCAPING AROUND MAILBOXES.

P. CONTRACTOR IS RESPONSIBLE TO OBTAIN APPLICABLE PERMITS FROM OTHER AGENCIES WITH JURISDICTIONS SUCH AS LANE COUNTY, OREGON DEPARTMENT OF TRANSPORTATION, OREGON DIVISION OF STATE LANDS, THE ARMY CORPS OF ENGINEERS, OR THE DEPARTMENT OF ENVIRONMENTAL QUALITY.

Q. ALL IMPROVEMENTS THAT WILL BE PRIVATELY OWNED AND MAINTAINED WILL BE BOUND BY THE CURRENT REQUIREMENTS OF THE STATE OF OREGON STRUCTURAL SPECIALITY CODE, PLUMBING SPECIALTY CODE, AND/OR CITY OF SPRINGFIELD BUILDING DIVISION REQUIREMENTS. CONTRACTOR IS RESPONSIBLE TO OBTAIN APPLICABLE PERMITS FROM OTHER CITY DEPARTMENTS PRIOR TO DOING PRIVATE WORK.

R. EROSION CONTROL MEASURES SHALL BE IN PLACE PRIOR TO THE START OF CONSTRUCTION. SEE EROSION CONTROL PLAN.

S. STREET TREES: ONLY STREET TRESS WITH A MINIMUM TRUNK CALIPER OF 2 IN. MEASURED 6 IN. ABOVE THE ROOT STEM SHALL BE SELECTED FOR PLANTING.

T. A PRE-CONSTRUCTION CONFERENCE IS REQUIRED BEFORE START OF CONSTRUCTION. ALL UTILITIES, CONTRACTORS, AND CITY REPRESENTATIVES SHALL HAVE RECEIVED THE FINAL APPROVED PLANS AT LEAST 5 WORKING DAYS PRIOR TO THE PRE-CONSTRUCTION CONFERENCE.

U. THE ENGINEER AND/OR CITY HAVE THE RIGHT TO REQUIRE ADDITIONAL WORK NOT SHOWN HEREIN BUT NECESSARY FOR THE SUCCESSFUL COMPLETION OF THE PROJECT. STD. SPEC. 104.08.

V. REQUESTS BY THE CONTRACTOR FOR CHANGES SHALL BE APPROVED BY THE ENGINEER AND THE CITY IN WRITING PRIOR TO IMPLEMENTATION.

W. CONTRACTOR SHALL SUBMIT EVIDENCE OF INSURANCE IN ACCORDANCE WITH THE STANDARD SPECIFICATION TO THE CITY FOR APPROVAL PRIOR TO BEGINNING WORK.

X. CONTRACTOR SHALL BE AWARE IF PAVING IS NOT SCHEDULED OR DOES NOT OCCUR PRIOR TO OCTOBER 15TH, WET WEATHER PROVISIONS INCLUDING ADDITIONAL ROCK SUBSTRUCTURE AND GEOTEXTILE FABRIC SHALL BE USED. REFER TO STANDARD SPECIFICATION SHEET 301.1.01 AND THE TYPICAL CROSS SECTIONS CONTAINED HEREIN FOR DETAILS.

Y. THE CONTRACTOR SHALL VERIFY EACH EXISTING SANITARY AND STORM CONNECTION.

No.	Revision/Issue	Date
DRAWN: CJG		

NOTE:

UTILITY LOCATIONS ARE APPROXIMATE
DO NOT
SCALE OR LOCATE UTILITY LINES OR MAINS FROM THESE DRAWINGS
CALL FOR UTILITY LOCATES 811 or (1-800-332-2344)

THE CONTRACTOR SHALL BE RESPONSIBLE FOR DETERMINING UTILITY LOCATIONS PRIOR TO BEGINNING OF CONSTRUCTION. THESE PLANS MAY NOT SHOW ALL UTILITIES OR THE CORRECT LOCATIONS.

P21149 BIKE/PED SAFETY RRFB/CROSSING CONSTRUCTION (51ST STREET RAISED CROSSING PORTION)

City of Springfield

PUBLIC WORKS / ENGINEERING
225 FIFTH STREET, SPRINGFIELD, OR 97477
PHONE (541) 726-3753 FAX (541) 736-3689
INTERNET www.springfield-or.gov

REGISTERED PROFESSIONAL ENGINEER
54699PE
OREGON
JULY 15, 2003
JEFFREY ALAN PASCHALL
7-20-19

EXPIRATION DATE: 12-31-20

SHEET 2

DEMOLITION PLAN

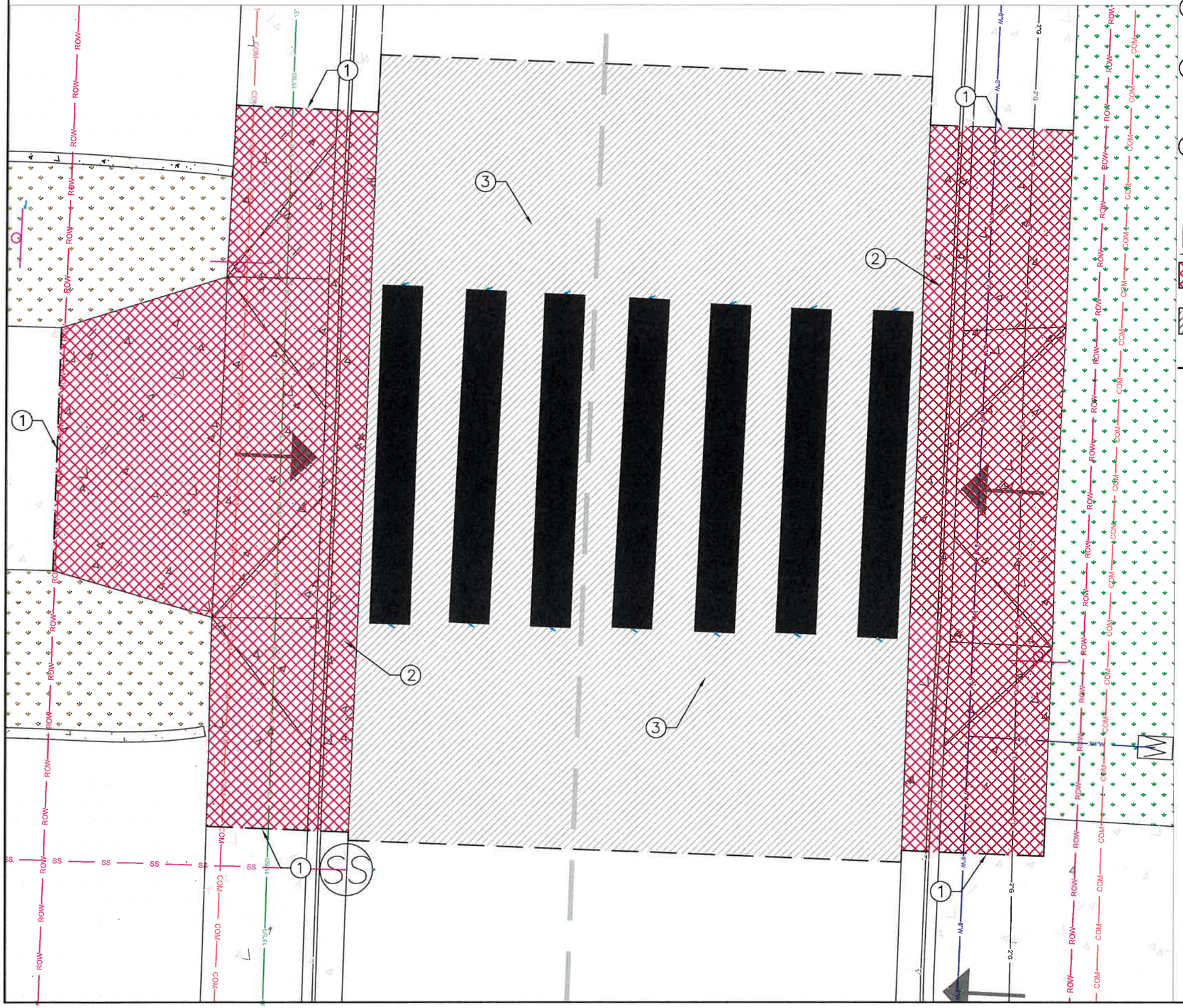

NOTES

1. SAWCUT AT NEAREST CONCRETE JOINT. SAWCUT TO BE DETERMINED IN FIELD BY INSPECTOR AND PM.
2. REMOVE EXISTING SIDEWALK, CURB, AND GUTTER AS SHOWN WITH HATCHING.
   SEE STD DWG 3–8 (SHEET 9)
3. REMOVE EXISTING ASPHALT.

LEGEND

- CONCRETE REMOVAL
- ASPHALT REMOVAL
- — — SAWCUT

NORTH

0 5' 10'

No.	Revision/Issue	Date
DRAWN: CJG		

NOTE:

UTILITY LOCATIONS ARE APPROXIMATE
DO NOT
SCALE OR LOCATE UTILITY LINES OR MAINS FROM THESE DRAWINGS
CALL FOR UTILITY LOCATES
811 or (1-800-332-2344)

THE CONTRACTOR SHALL BE RESPONSIBLE FOR DETERMINING UTILITY LOCATIONS PRIOR TO BEGINNING OF CONSTRUCTION. THESE PLANS MAY NOT SHOW ALL UTILITIES OR THE CORRECT LOCATIONS.

P21149 BIKE/PED SAFETY RRFB/CROSSING CONSTRUCTION
(51ST STREET RAISED CROSSING PORTION)

City of Springfield

PUBLIC WORKS / ENGINEERING
225 FIFTH STREET, SPRINGFIELD, OR 97477
PHONE (541) 726–3753 FAX (541) 736–3689
INTERNET www.springfield-or.gov

REGISTERED PROFESSIONAL ENGINEER
54699PE
OREGON
JULY 15, 2003
JEFFREY ALAN PASCHALL

EXPIRATION DATE: 12-31-20

SHEET 3

CONSTRUCTION PLAN

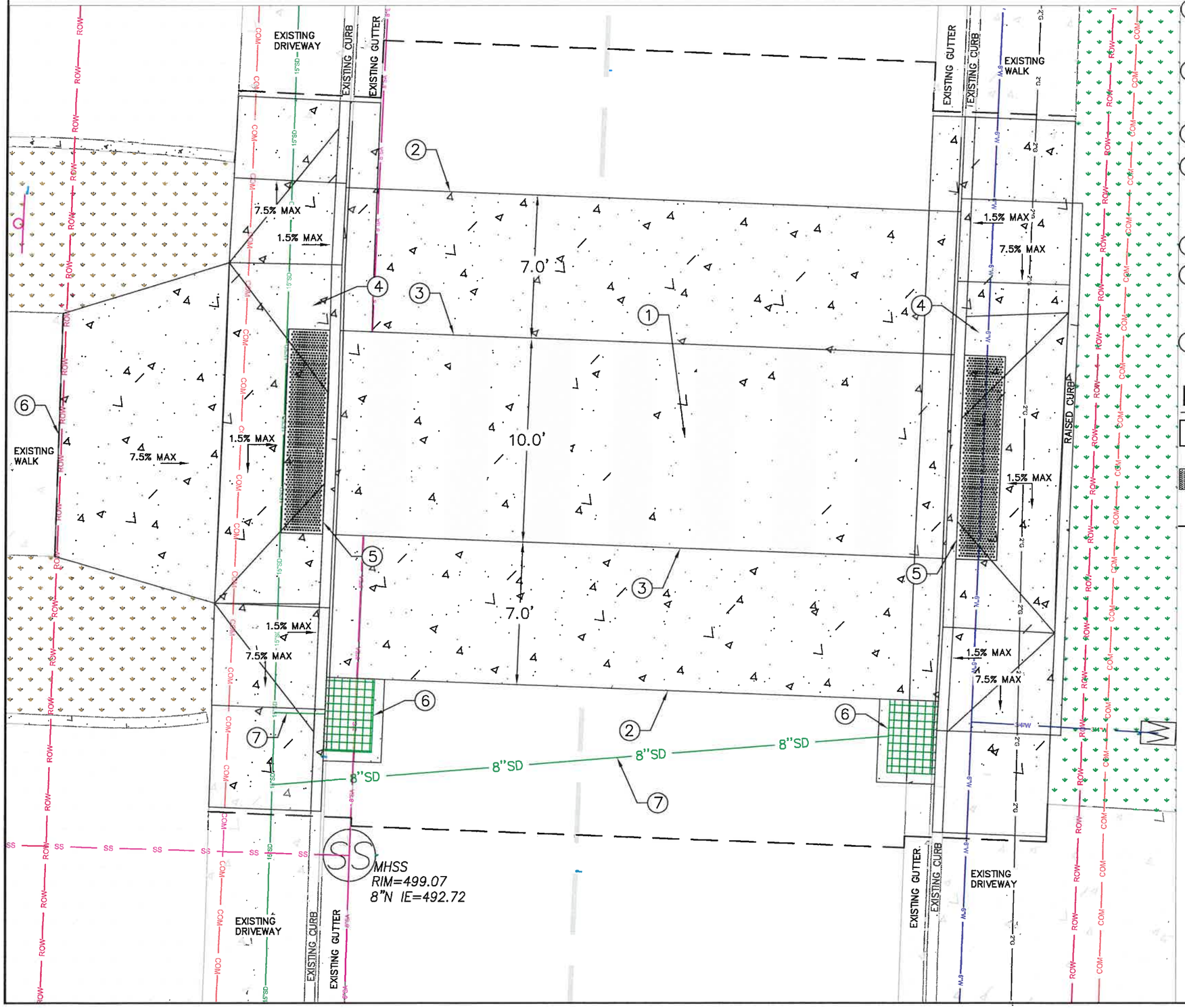

NOTES

1. CONSTRUCT 4" CONCRETE RAISED CROSSING. SEE SHEET 6 FOR NEW CROSSWALK ELEVATIONS
2. BEGINNING OF TAPER UP TO CROSSING. START AT EXISTING ELEVATIONS (SEE SHEET 6)
3. END OF TAPER AT CROSSING.
4. CONSTRUCT 2" DEPRESSED LANDING TO MEET THE 4" RAISED CROSSING. SEE SHEET 6 FOR LANDING ELEVATIONS.
5. INSTALL 2'x10' TRUNCATED DOME.
6. PROPOSED CATCH BASIN WITH BIKE FRIENDLY GRATE. SEE STD DWG 4-11 (SEE SHEET 7)
7. PROPOSED 8" STORM LINE.

LEGEND

- NEW CONCRETE
- TRUNCATED DOMES
- SAWCUT

No.	Revision/Issue	Date
DRAWN: CJG		

NOTE:

UTILITY LOCATIONS ARE APPROXIMATE
DO NOT
SCALE OR LOCATE UTILITY LINES OR MAINS FROM THESE DRAWINGS
CALL FOR UTILITY LOCATES 811 or (1-800-332-2344)

THE CONTRACTOR SHALL BE RESPONSIBLE FOR DETERMINING UTILITY LOCATIONS PRIOR TO BEGINNING OF CONSTRUCTION. THESE PLANS MAY NOT SHOW ALL UTILITIES OR THE CORRECT LOCATIONS.

P21149 BIKE/PED SAFETY RRFB/CROSSING CONSTRUCTION (51ST STREET RAISED CROSSING PORTION)

City of Springfield

PUBLIC WORKS / ENGINEERING
225 FIFTH STREET, SPRINGFIELD, OR 97477
PHONE (541) 726-3753 FAX (541) 736-3689
INTERNET www.springfield-or.gov

REGISTERED PROFESSIONAL ENGINEER
54699PE
OREGON
JULY 15, 2003
JEFFREY ALAN PASCHALL
12/31/19

EXPIRATION DATE: 12-31-20

SHEET 4

SIGN & STRIPING PLAN

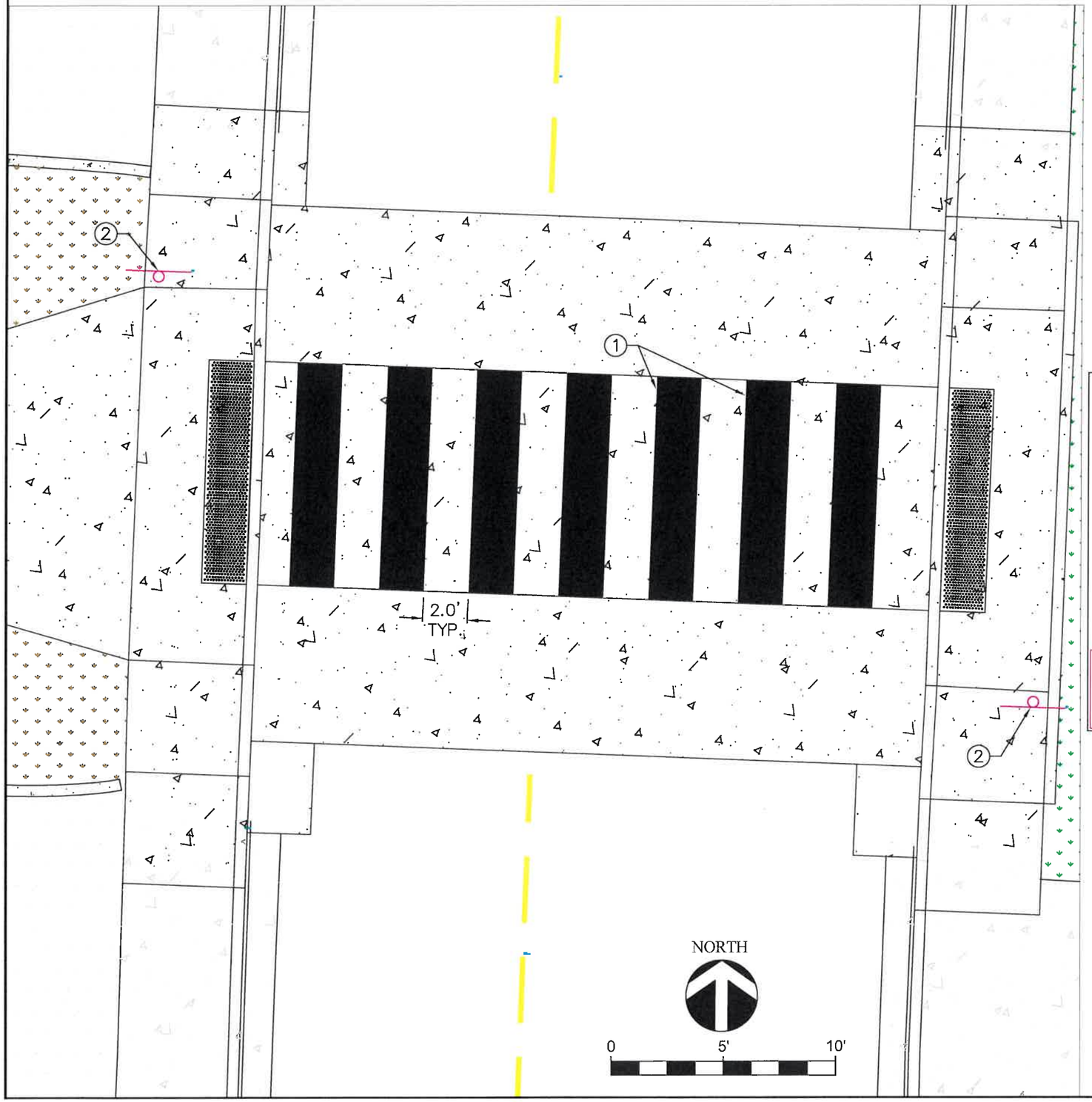

NOTES

1. 2'x10' TYPE "B–HS" WHITE THERMOPLASTIC STRIPING PER DETAIL BELOW (SEE DETAIL 1).
2. REMOVE AND REPLACE EXISTING SIGNS. REPLACE WITH FLUORESCENT YELLOW GREEN S1–1 36"x36" AND W16–7P 30"x18" ARROW CROSSING SIGNS.

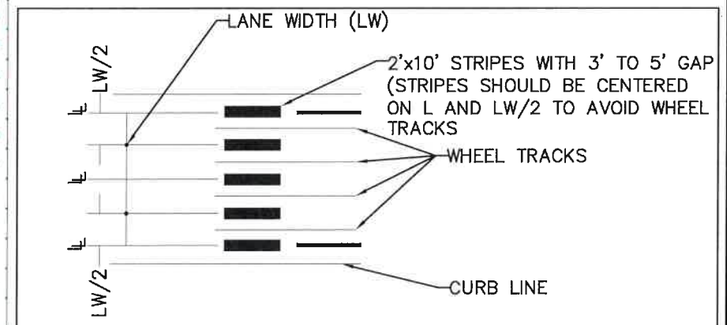

DETAIL 1–STAGGERED CONTINENTAL LAYOUT

GENERAL NOTE:
1. INSTALL CROSSWALK BARS SUCH THAT THE THROAT OF THE ADA RAMP IS ENTIRELY WITHIN CROSSWALK MARKINGS, OR 5' BACK OF EXTENDED FOG LINE, EDGE OF PAVEMENT, OR CURB FACE.

No.	Revision/Issue	Date
DRAWN: CJG		

NOTE:

UTILITY LOCATIONS ARE APPROXIMATE
DO NOT
SCALE OR LOCATE UTILITY LINES OR MAINS FROM THESE DRAWINGS
CALL FOR UTILITY LOCATES 811 or (1-800-332-2344)

THE CONTRACTOR SHALL BE RESPONSIBLE FOR DETERMINING UTILITY LOCATIONS PRIOR TO BEGINNING OF CONSTRUCTION.
THESE PLANS MAY NOT SHOW ALL UTILITIES OR THE CORRECT LOCATIONS.

P21149 BIKE/PED SAFETY RRFB/CROSSING CONSTRUCTION (51ST STREET RAISED CROSSING PORTION)

City of Springfield

PUBLIC WORKS / ENGINEERING
225 FIFTH STREET, SPRINGFIELD, OR 97477
PHONE (541) 726-3753 FAX (541) 736-3689
INTERNET www.springfield-or.gov

REGISTERED PROFESSIONAL ENGINEER
19,697PE
OREGON
MAY 5, 1998
BRIAN F. BARNETT
EXPIRES 12-31-19

SHEET
5

PROPOSED ELEVATIONS

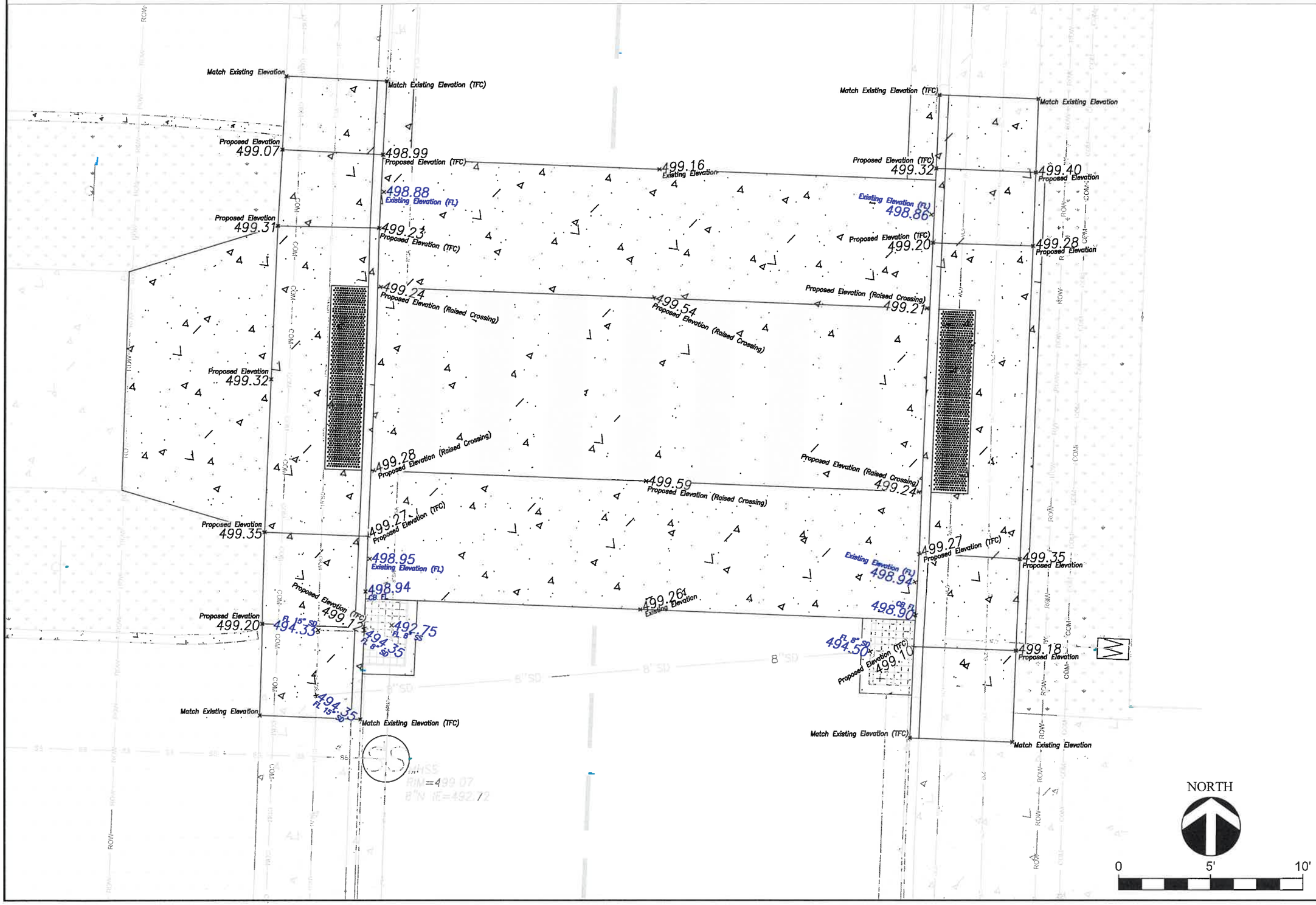

No.	Revision/Issue	Date
DRAWN: CJG		

NOTE:

UTILITY LOCATIONS ARE APPROXIMATE
DO NOT
SCALE OR LOCATE UTILITY LINES OR MAINS
FROM THESE DRAWINGS
CALL FOR UTILITY LOCATES
811 or (1-800-332-2344)

THE CONTRACTOR SHALL BE RESPONSIBLE FOR DETERMINING UTILITY LOCATIONS PRIOR TO BEGINNING OF CONSTRUCTION.
THESE PLANS MAY NOT SHOW ALL UTILITIES OR THE CORRECT LOCATIONS.

P21149 BIKE/PED SAFETY RRFB/CROSSING CONSTRUCTION (51ST STREET RAISED CROSSING PORTION)

City of Springfield
PUBLIC WORKS / ENGINEERING
225 FIFTH STREET - SPRINGFIELD, OR 97477
PHONE (541) 726-3753 FAX (541) 726-3689
INTERNET www.springfield-or.gov

REGISTERED PROFESSIONAL ENGINEER
54699PE
OREGON
JULY 15, 2003
JEFFREY ALAN PASCHALL

EXPIRATION DATE: 12-31-20

SHEET
6

51st St. Raised Crossing Profile

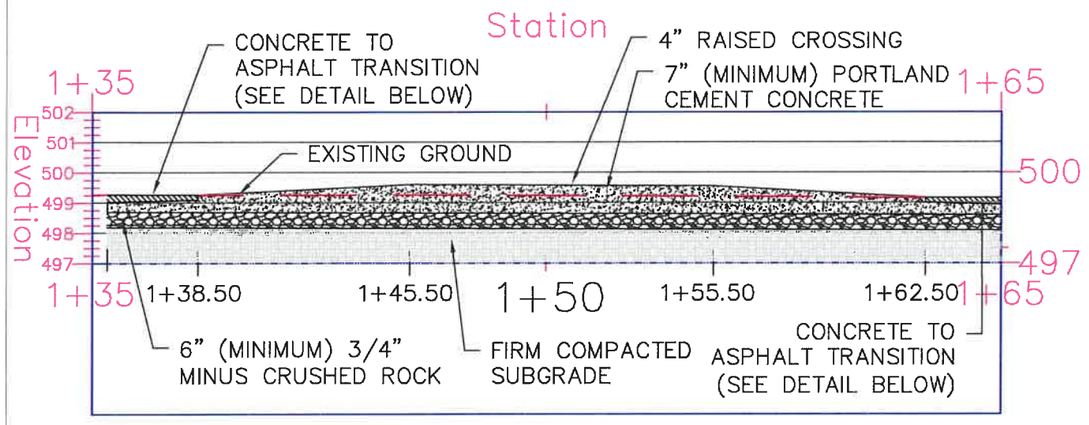

SCALE: HORIZ. 1"=5'
VERT. 1"=5'

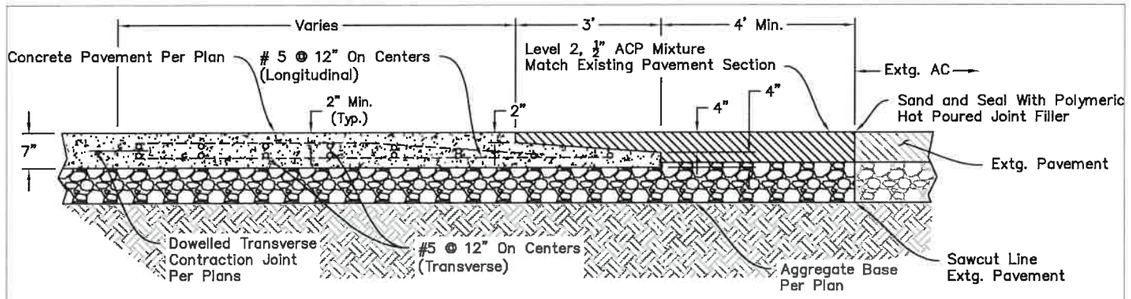

CONCRETE TO ASPHALT PAVEMENT TRANSITION

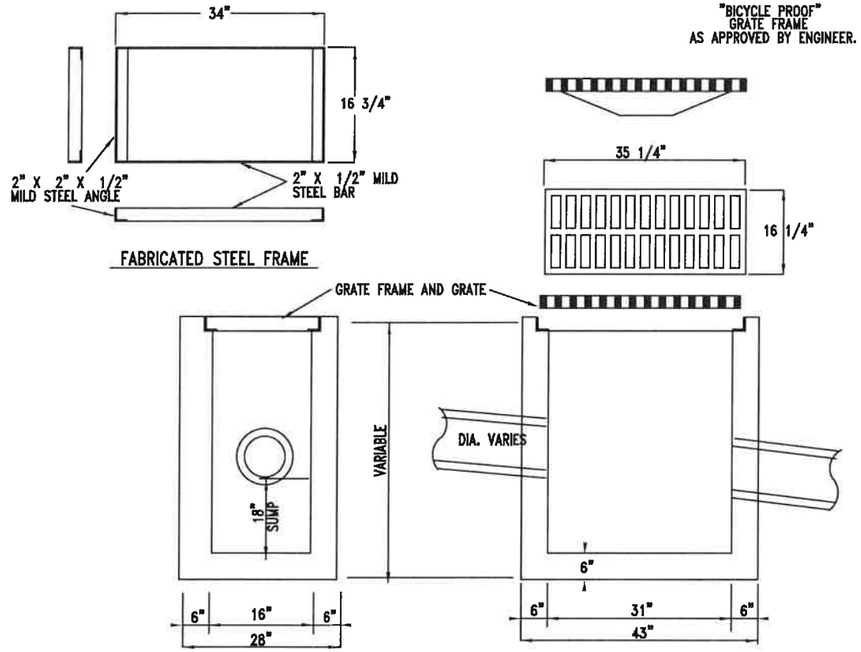

AREA DRAIN CATCH BASIN

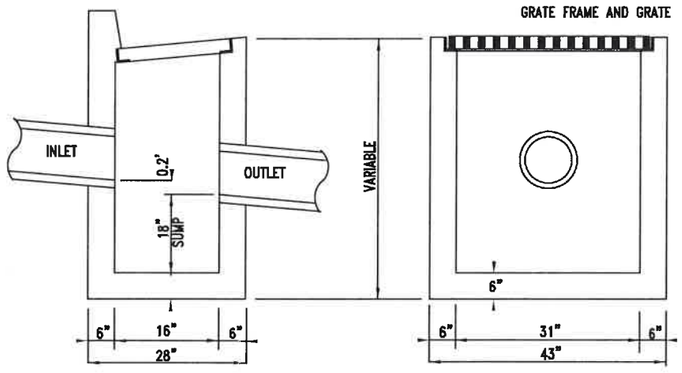

STREET DRAIN CATCH BASIN

REVISION	DATE	BY	APPR.

CITY OF SPRINGFIELD
DEPT. OF PUBLIC WORKS
225 FIFTH STREET
SPRINGFIELD, OR. 97477

CATCH BASIN

STANDARD DRAWING
4-11

No.	Revision/Issue	Date
DRAWN: CJG		

NOTE:

UTILITY LOCATIONS ARE APPROXIMATE
DO NOT
SCALE OR LOCATE UTILITY LINES OR MAINS FROM THESE DRAWINGS
CALL FOR UTILITY LOCATES
811 or (1-800-332-2344)

THE CONTRACTOR SHALL BE RESPONSIBLE FOR DETERMINING UTILITY LOCATIONS PRIOR TO BEGINNING OF CONSTRUCTION.
THESE PLANS MAY NOT SHOW ALL UTILITIES OR THE CORRECT LOCATIONS.

P21149 BIKE/PED SAFETY RRFB/CROSSING CONSTRUCTION (51ST STREET RAISED CROSSING PORTION)

City of Springfield
PUBLIC WORKS / ENGINEERING
225 FIFTH STREET, SPRINGFIELD, OR 97477
PHONE (541) 726-3753 FAX (541) 736-3689
INTERNET www.springfield-or.gov

REGISTERED PROFESSIONAL ENGINEER
54699PE
OREGON
JULY 15, 2003
JEFFREY ALAN PASCHALL

EXPIRATION DATE: 12-31-20

SHEET
7

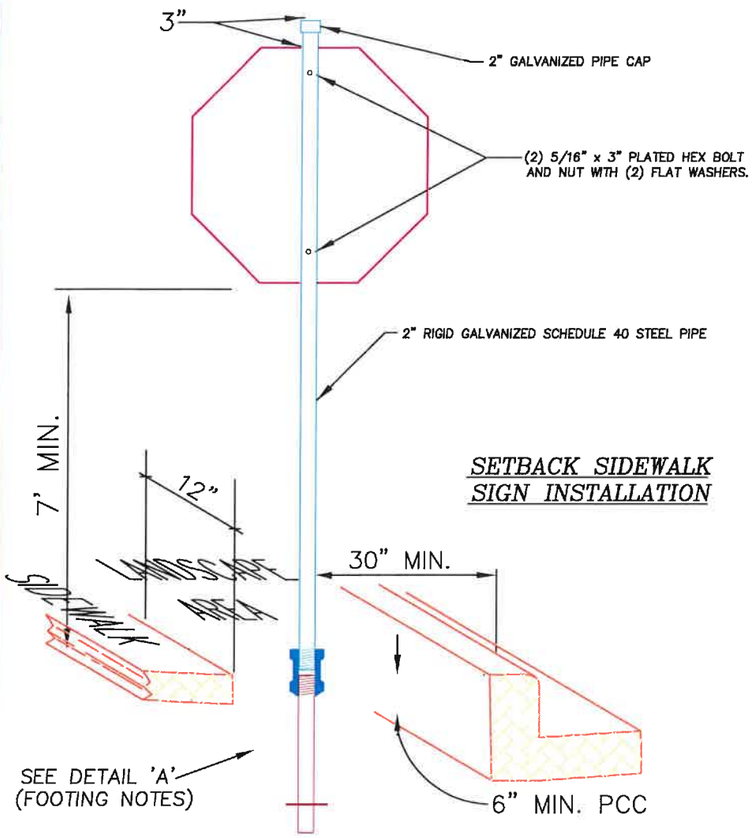

SETBACK SIDEWALK SIGN INSTALLATION

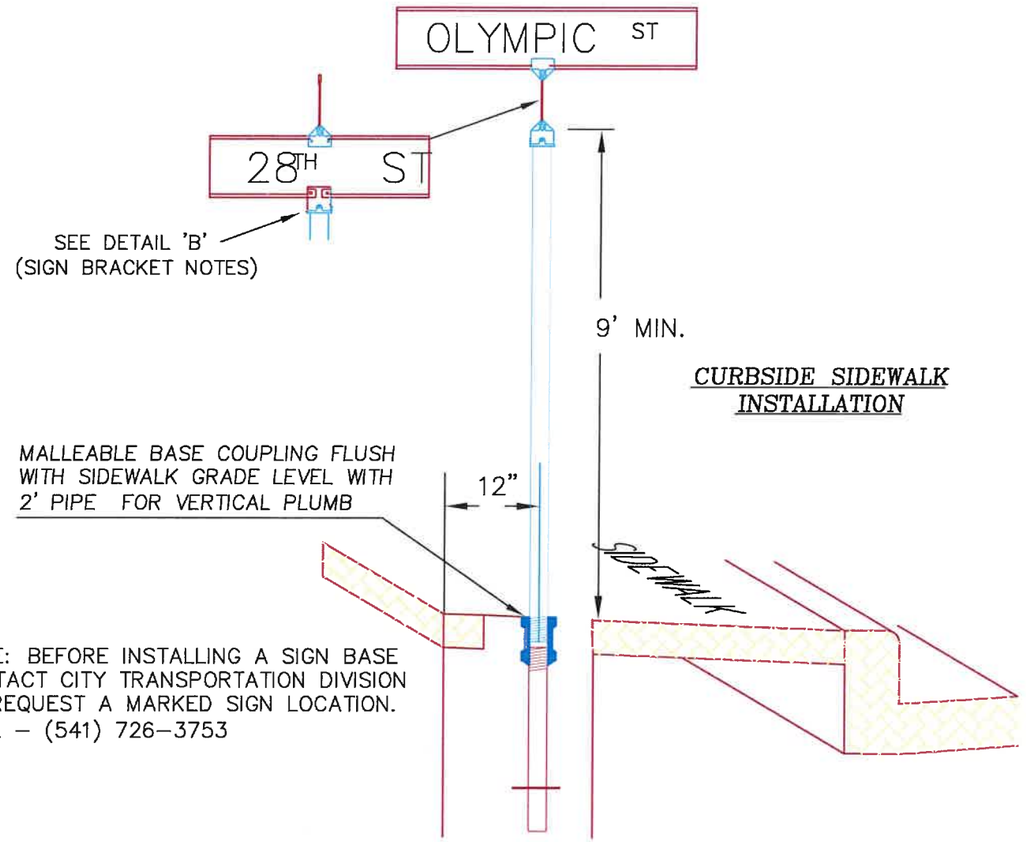

CURBSIDE SIDEWALK INSTALLATION

NOTE: BEFORE INSTALLING A SIGN BASE CONTACT CITY TRANSPORTATION DIVISION TO REQUEST A MARKED SIGN LOCATION. CALL – (541) 726–3753

DETAIL 'A'

FOOTING INSTALLATION NOTES

1. INSTALL 2" SCHEDULE 40 RIGID GALVANIZED STEEL PIPE.
2. INSTALL 2" THREADED, GALVANIZED, MALLEABLE IRON PIPE COUPLING, (CLASS 150) WITH TOP SET FLUSH AT FINISHED GRADE.
3. INSTALL 2" RIGID GALVANIZED STEEL PIPE TACK WELDED TO COUPLING TO PREVENT TURNING.
4. INSTALL 1/4" X 8" STEEL PIN (Spike) THROUGH STEEL PIPE
5. INSTALL SIGN BASE ASSEMBLY IN CLASS 3300 PORTLAND CONCRETE USING 2' MIN. GUIDE ROD TO INSURE SIGN POST WILL BE VERTICAL.

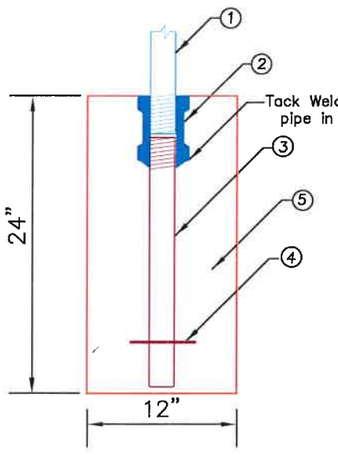

DETAIL 'B'

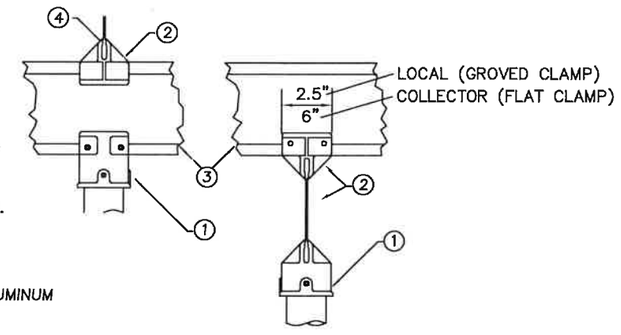

SIGN MOUNTING BRACKET NOTES

1. INSTALL STREET SIGN CAP MOUNT FOR STREET NAME SIGN.
2. INSTALL 90° TOP MOUNT FOR STREET NAME SIGN.
3. INSTALL EXTRUDED or FLAT ALUMINUM STREET NAME SIGN.
4. MOUNTING BRACKETS FOR LOCAL SIGNS SHALL HAVE A GROVED CLAMP TO FIT EXTRUDED SIGNS. MOUNTING BRACKETS FOR COLLECTOR SIGNS SHALL HAVE A FLAT CLAMP TO FIT FLAT SIGNS

NOTE: DRAWING NOT TO SCALE

ALL EYEBOLTS, BOLTS, NUTS, AND WASHERS SHALL BE GALV. STEEL UNLESS NOTED OTHERWISE, ALL SET SCREWS SHALL BE MIN. DIA. 1/4" STAINLESS STEEL WITH SQUARE OR HEX HEADS. ALL SPANWIRE HANGERS AND PLUMBIZERS SHALL BE CAST BRONZE.

NO	REVISION	DATE	BY	APPR.
1	STD. DWG. 5–18	4/94	DRB	
2	SIGN STANDARDS	12/96	DRB	
3	STD. DWG. UPDATE	7/01	D.D.	B.B.
4	STD. DWG. UPDATE	5/11	DRB	B.B.
5	STD. DWG. UPDATE	8/11	DRB	B.B.

DRAWN: M. ABARCA 5/93
DESIGNED:
CHECKED:
APPROVED:
FILENAME: TSDS_18

CITY OF SPRINGFIELD
DEPT. OF PUBLIC WORKS
TRANSPORTATION DIVISION
225 FIFTH STREET
SPRINGFIELD, OR. 97477
(541) 726-3753

SPRINGFIELD TRANSPORTATION DIVISION

ROADSIDE SIGN INSTALLATION DETAIL

STANDARD DRAWING
5–18

No.	Revision/Issue	Date
DRAWN: CJG		

NOTE:

UTILITY LOCATIONS ARE APPROXIMATE
DO NOT
SCALE OR LOCATE UTILITY LINES OR MAINS FROM THESE DRAWINGS
CALL FOR UTILITY LOCATES
811 or (1-800-332-2344)

THE CONTRACTOR SHALL BE RESPONSIBLE FOR DETERMINING UTILITY LOCATIONS PRIOR TO BEGINNING OF CONSTRUCTION.
THESE PLANS MAY NOT SHOW ALL UTILITIES OR THE CORRECT LOCATIONS.

P21149 BIKE/PED SAFETY RRFB/CROSSING CONSTRUCTION (51ST STREET RAISED CROSSING PORTION)

City of Springfield

PUBLIC WORKS / ENGINEERING
225 FIFTH STREET, SPRINGFIELD, OR 97477
PHONE (541) 726-3753 FAX (541) 736-3689
INTERNET www.springfield-or.gov

REGISTERED PROFESSIONAL ENGINEER
19,697PE
10 FEB 19
OREGON
MAY 5, 1998
BRIAN F. BARNETT

EXPIRES 12-31-19

SHEET
8

DO NOT USE THIS DETAIL FOR STANDARD CURB REMOVAL
REFER TO STANDARD DRAWING 3-7

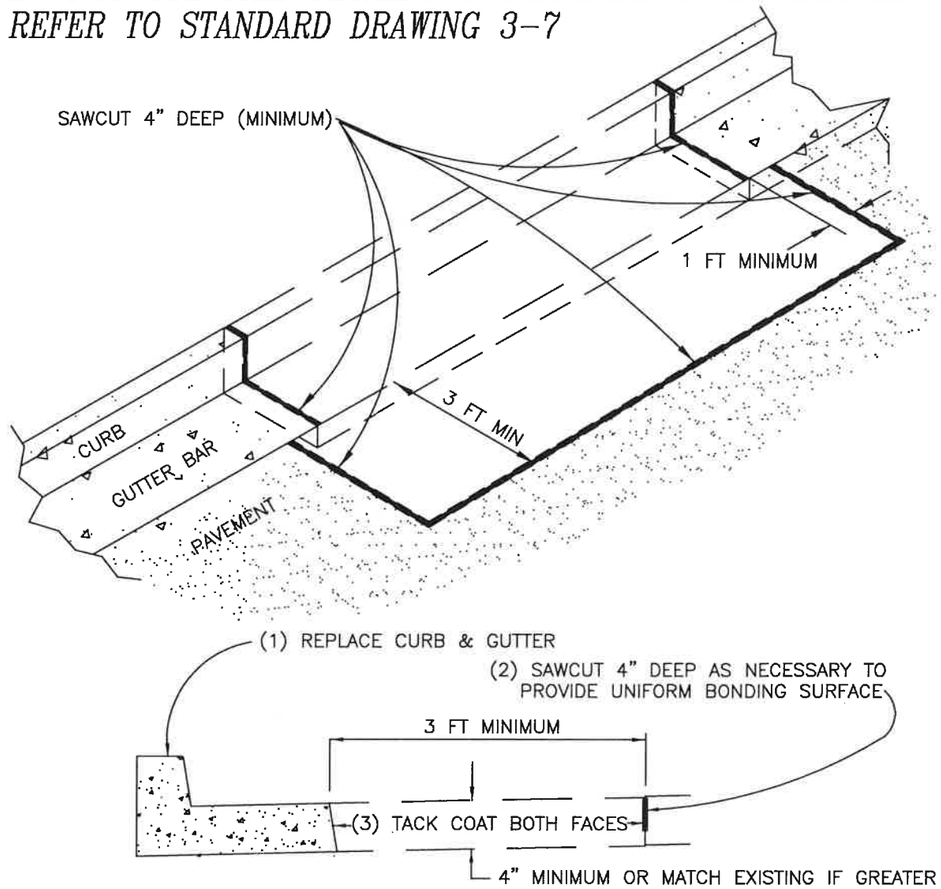

(4) PLACE HOT MIX ASPHALT AND USE MECHANICAL COMPACTION EQUIPMENT TO ACHIEVE REQUIRED DENSITY

(5) SEAL ALL JOINTS WITH POLYMERIZED ASPHALT AND SAND TO AVOID PICKUP

NOTES

* EXISTING GUTTER BAR SHALL NOT BE REMOVED WITHOUT PRIOR APPROVAL BY THE CITY
* CURB CUT WIDTH SHALL BE IN ACCORDANCE WITH PERMIT
* REFER TO SPRINGFIELD STANDARD SPECIFICATIONS FOR ROADWAY STRUCTURE COMPACTION REQUIREMENTS
* SIDEWALKS, ACCESS RAMPS, AND RESIDENTIAL DRIVEWAYS SHALL BE 3000 PSI FIELD STRENGTH (3450 PSI LAB STRENGTH) 6.0 SACK MIX CONCRETE
* CURBS & COMMERCIAL DRIVEWAYS SHALL BE 3500 PSI FIELD STRENGTH (4025 PSI LAB STRENGTH) 6.3 SACK MIX CONCRETE

NO	REVISION	DATE	BY	APPR.

CITY OF SPRINGFIELD
SPRINGFIELD
DEPT. OF PUBLIC WORKS

CURB & GUTTER
REMOVAL & REPLACEMENT

Al Peroutka City Engineer 2003

STANDARD DRAWING
3-8
2003

No.	Revision/Issue	Date
DRAWN: CJG		

NOTE:

UTILITY LOCATIONS ARE APPROXIMATE
DO NOT
SCALE OR LOCATE UTILITY LINES OR MAINS FROM THESE DRAWINGS
CALL FOR UTILITY LOCATES
811 or (1-800-332-2344)

THE CONTRACTOR SHALL BE RESPONSIBLE FOR DETERMINING UTILITY LOCATIONS PRIOR TO BEGINNING OF CONSTRUCTION.
THESE PLANS MAY NOT SHOW ALL UTILITIES OR THE CORRECT LOCATIONS.

P21149 BIKE/PED SAFETY RRFB/CROSSING CONSTRUCTION (51ST STREET RAISED CROSSING PORTION)

City of Springfield

PUBLIC WORKS / ENGINEERING
225 FIFTH STREET, SPRINGFIELD, OR 97477
PHONE (541) 726-3753 FAX (541) 736-3889
INTERNET www.springfield-or.gov

REGISTERED PROFESSIONAL ENGINEER
54699PE
OREGON
JULY 15, 2003
JEFFREY ALAN PASCHALL
12-31-14

EXPIRATION DATE: 12-31-20

SHEET
9

NOTES:

1. PLACE INLET/CATCH BASIN PROTECTION AT EXISTING FIXTURES (SEE DETAIL ON SHEET E2.)

GENERAL NOTES:

1. CONCRETE WASHOUTS ARE NOT PROVIDED ON THIS PROJECT
2. SAW CUTTING SLURRY IS TO BE VACUUMED
3. ANY AREAS OF EXPOSED SOILS. INCLUDING ROADWAY EMBANKMENTS, THAT WILL NOT BE DISTURBED FOR TWO DAYS DURING THE WET SEASON (OCTOBER 1 TO APRIL 30) OR SEVEN DAYS DURING THE DRY SEASON (MAY 1 TO SEPTEMBER 30) SHALL BE IMMEDIATELY STABILIZED WITH AN APPROVED ESC METHOD (SEEDING & MULCHING WITH STRAW, BARK, COMPOST, OR PLASTIC COVERING, ETC.).

EROSION CONTROL STANDARD NOTES:

A. Approval of this Erosion and Sedimentation Control Plan (ESCP) does not constitute an approval of permanent road or drainage design (e.g., size and location of roads, pipes, restrictors, channels, retention facilities, utilities, etc.).

B. Approval of this ESCP does not relieve the permit holder and or the contractor from all other permitting requirements. Prior to beginning construction activities, all other necessary approvals shall be obtained.

C. An inspection of the erosion control measures by City LDAP staff is required prior to any ground disturbance on the site.

D. The erosion and sediment control measures shown on the plan are the minimum requirements for anticipated site conditions. During the construction period, these measures shall be upgraded as needed for unexpected storm events and to ensure that sediment and sediment-laden water does not leave the site.

E. The implementation of the ESCP and the construction, maintenance, replacement, and upgrading of the erosion and sediment control measures is the responsibility of the permit holder and or the contractor until all construction is completed and accepted by the City and vegetation/landscaping is established per the required warranty period.

F. In the event the ESC facilities identified on the ESCP are not functioning properly, the contractor is responsible for immediately implementing changes to the ESCP as directed by the ESCP engineer or his inspector. The engineer, his inspector or the City may stop all construction activity on site until the erosion problem is corrected and all ESC facilities are functioning properly. If the contractor does not immediately implement changes to the ESCP identified by the ESCP engineer or his inspector, the City may implement the necessary changes and require payment from the contractor prior to project acceptance by the City.

G. The boundaries of the clearing limits shown on this plan shall be clearly flagged in the field by the engineer prior to construction. During the construction period, no disturbance beyond the flagged clearing limits shall be permitted. The flagging shall be maintained by the permit holder and or the contractor for the duration of construction.

H. The erosion and sediment control measures on active sites shall be inspected and maintained daily and within the 24 hours after any storm event of greater than 0.5 inches of rain per 24 hour period. Measures shall be inspected by the permit holder and or the contractor after each rainfall and at least daily during prolonged rainfall. Any required repairs or adjustments shall be made immediately. The erosion and sediment control measures on inactive sites shall be inspected a minimum of once every two (2) weeks or within 48 hours following a storm event. Written records shall be kept of weekly reviews of the ESC facilities during the wet season (October 1 to April 30) and of monthly reviews during the dry season (May1 to September 30).

I. All erosion and sediment control measures shall be protected from damage at all times. Control measures shall remain in place until permanent or temporary re-vegetation has been stabilized. Any measure that is damaged or destroyed shall be repaired or replaced immediately.

J. Any areas of exposed soils, including roadway embankments, that will not be disturbed for two days during the wet season (October 1 to April 30) or seven days during the dry season (May 1 to September 30) shall be immediately stabilized with an approved ESC method (seeding & mulching with straw, bark, compost, or plastic covering, etc.).

K. A supply of materials necessary to meet compliance and implement the LDAP or other best management erosion practices under all weather conditions shall be maintained at all times on the construction site.

L. No hazardous substances, such as paints, thinners, fuels and other chemicals shall be released onto the site, adjacent properties, or into water features, the City's storm water system, or related natural resources.

M. Street sweeping shall be performed as needed or when directed by the City inspector to ensure public right-of-ways are kept clean and free of debris. Street flushing is prohibited.

N. When trucking saturated soils from the site, either water-tight trucks shall be used or loads shall be drained on site until dripping has been reduced to no more than one gallon per hour. Sediment laden water will not be allowed to enter the storm water system

O. Extracted ground water from excavated trenches shall be disposed of in a suitable manner without damage to adjacent property, public storm water system, water features, and related natural resources. Approval of a dewatering system does not guarantee that it will meet compliance or be acceptable for use in all situations. Modifications to the dewatering system will be required if compliance can not be met. At no time will sediment laden water be allowed to leave the construction site.

P. At no time shall more than one foot of sediment be allowed to accumulate within a catch basin. All catch basins and conveyance lines shall be cleaned prior to paving. The cleaning operation shall not flush sediment laden water into the downstream system.

Q. Any required stabilized construction entrances and roads shall be installed at the beginning of construction and maintained for the duration of the project. Additional measures, such as wash pads, may be required to ensure that all paved areas are kept clean for the duration of the project.

R. Any permanent flow control facility used as a temporary settling basin shall be modified with the necessary erosion control measures and shall provide adequate storage capacity.

S. Where straw mulch for temporary erosion control is required, it shall be applied at a minimum thickness of two to three inches.

T. In preparation of the wet season, all disturbed areas shall be reviewed to identify which ones can be seeded in preparation for the winter rains. A sketch map of those areas to be seeded and those areas to remain uncovered shall be submitted to the City by September 15. The City can require seeding of additional areas in order to protect surface waters, adjacent properties, or drainage facilities. Disturbed areas identified for seeding shall be seeded prior to the beginning of the wet season (October 1).

No.	Revision/Issue	Date
DRAWN: CJG		

NOTE:

UTILITY LOCATIONS ARE APPROXIMATE
DO NOT
SCALE OR LOCATE UTILITY LINES OR MAINS FROM THESE DRAWINGS
CALL FOR UTILITY LOCATES 811 or (1-800-332-2344)

THE CONTRACTOR SHALL BE RESPONSIBLE FOR DETERMINING UTILITY LOCATIONS PRIOR TO BEGINNING OF CONSTRUCTION. THESE PLANS MAY NOT SHOW ALL UTILITIES OR THE CORRECT LOCATIONS.

P21149 BIKE/PED SAFETY RRFB/CROSSING CONSTRUCTION (51ST STREET RAISED CROSSING PORTION)

City of Springfield

PUBLIC WORKS / ENGINEERING
225 FIFTH STREET SPRINGFIELD, OR 97477
PHONE (541) 726-3753 FAX (541) 736-3689
INTERNET www.springfield-or.gov

ENGINEERS STAMP

REGISTERED PROFESSIONAL ENGINEER
54699PE
OREGON
JULY 15, 2003
JEFFREY ALAN PASCHALL

EXPIRATION DATE: 12-31-20

SHEET 10

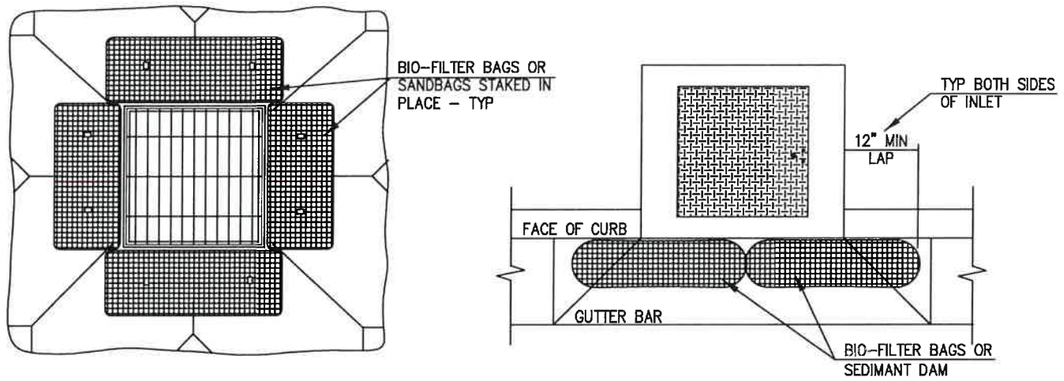

NOTES
1. PRIOR TO 1st PAVEMENT LIFT, REMOVE BIO-BAG/SANDBAG BARRIERS AND INSTALL BASIN INSERT BAG OR CURB INLET SEDIMENT DAM AT ALL INLET STRUCTURES.

1 DRAINAGE INLET STRUCTURE PROTECTION

NO SCALE

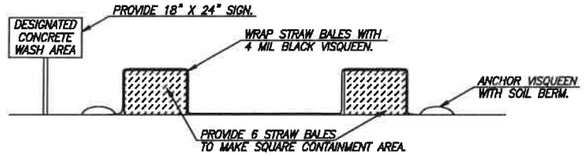

CONCRETE WASH AREA DETAIL

N.T.S.

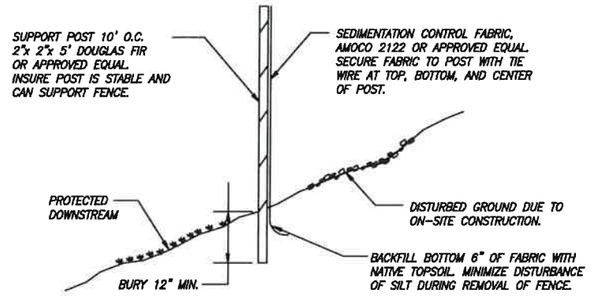

SEDIMENTATION CONTROL FABRIC TYPE SILT FENCE

N.T.S.

INLET PROTECTION

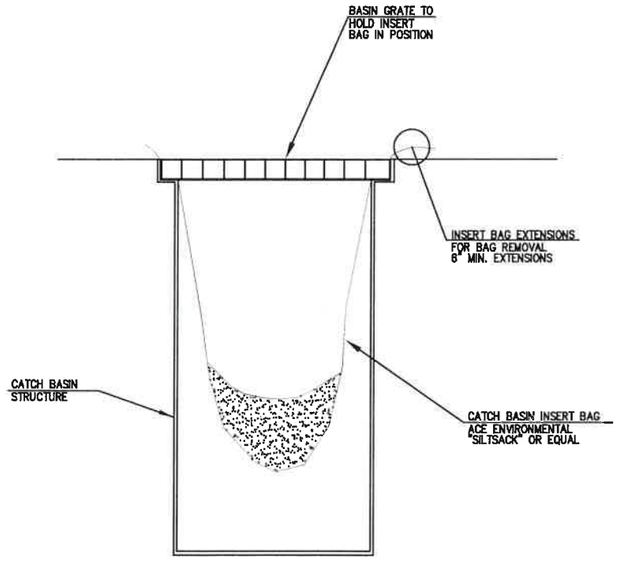

1 CATCH BASIN INSERT BAG

NO SCALE

No	Revision/Issue	Date
DRAWN: CJG		

NOTE:

UTILITY LOCATIONS ARE APPROXIMATE
DO NOT
SCALE OR LOCATE UTILITY LINES OR MAINS FROM THESE DRAWINGS
CALL FOR UTILITY LOCATES
811 or (1-800-332-2344)

THE CONTRACTOR SHALL BE RESPONSIBLE FOR DETERMINING UTILITY LOCATIONS PRIOR TO BEGINNING OF CONSTRUCTION.
THESE PLANS MAY NOT SHOW ALL UTILITIES OR THE CORRECT LOCATIONS.

P21149 BIKE/PED SAFETY RRFB/CROSSING CONSTRUCTION (51ST STREET RAISED CROSSING PORTION)

City of Springfield
PUBLIC WORKS / ENGINEERING
225 FIFTH STREET - SPRINGFIELD, OR 97477
PHONE (541) 726-3753 FAX (541) 736-3689
INTERNET www.springfield-or.gov

ENGINEER'S STAMP
REGISTERED PROFESSIONAL ENGINEER
54699PE
OREGON
JULY 15, 2003
JEFFREY ALAN PASCHALL

EXPIRATION DATE: 12-31-20

SHEET
11

P21149 BIKE/PED SAFETY RRFB/CROSSING CONSTRUCTION

(S. 42ND ST. @ MT. VERNON PED CROSSING PORTION)

PROJECT DESCRIPTION

THIS PORTION (4 OF 4) PROJECT WILL CONSIST OF REPLACING FLASHING BEACONS WITH RRFB FLASHING LIGHTS AT THE INTERSECTION OF S. 42ND STREET AND MT. VERNON. THIS PORTION OF THE PROJECT WAS DESIGNED UNDER P21149 S. 42ND STREET PED CROSSING.

LEGEND

- RIGHT OF WAY (ROW) LINE
- GAS LINE
- FIBER OPTIC (NO. OF CABLES)
- WATER LINE
- POWER (ELECTRIC)
- STORM SEWER (EXISTING)
- SANITARY SEWER (EXISTING)
- COMMUNICATION LINE (EXISTING)
- TV LINE (EXISTING)
- GAS VALVE
- WATER VALVE
- FIRE HYDRANT
- WATER METER
- UTILITY BOX
- POWER POLE/LIGHT
- CATCH BASIN (EXISTING)
- CURB INLET (NEW)
- STORM MANHOLE (NEW) (SD)
- SANITARY MANHOLE (EXISTING) (SS)
- SANITARY MANHOLE (NEW) (SS)
- STORM AREA DRAIN (NEW)
- MAIL BOX (MB)
- UTILITY POLE

ABBREVIATIONS

AC	ASPHALTIC CONCRETE	G	GAS	RCP	REINFORCED CONCRETE PIPE
ABAN	ABANDON(ED)	GALV	GALVAIZED	RD	ROAD
ADA	AMERICANS W/ DISABILITIES ACT	GR	GRADE	RDCR	REDUCER
		GRVL	GRAVEL	REINF	REINFORCE(D)(ING)(MENT)
AL	ALUMINUM	GV	GATE VALVE	RESTR	RESTRAIN(ED)
APPROX	APPROXIMATE			REQ'D	REQUIRED
APPVD	APPROVED	HORIZ	HORIZONTAL	ROW	RIGHT OF WAY
ASSY	ASSEMBLY	HWY	HIGHWAY		
ARV	AIR RELEASE VALVE	HP	HIGH PRESSURE	SCHED	SCHEDULE
				SD	STORM DRAIN
BLDG	BUILDING	ID	INSIDE DIAMETER	SERV	SERVICE
BM	BENCHMARK	IE	INVERT ELEVATION	SHT(S)	SHEETS
BO	BLOWOFF	INSTL	INSTALL	SL	SLOPE
BTM	BOTTOM			SPECS	SPECIFICATIONS
		LDAP	LAND & DRAINAGE ALTERATION PERMIT	SPL	SPOOL
C/L	CENTER LINE			SQ	SQUARE
CB	CATCH BASIN	LAT	LATERAL	SQ FT	SQUARE FOOT
CCP	CONCRETE CULVERT PIPE	LF	LINEAL FEET	SS	SANITARY SEWER
		LP	LOW PRESSURE	SST	STAINLESS STEEL
CI	CAST IRON			ST	STREET
CG	CURB/GUTTER	MATL(S)	MATERIAL(S)	STA	STATION
CL	CLASS	MAX	MAXIMUM	STL	STEEL
CO	CLEANOUT	MFR(S)	MANUFACTURER(S)	STD	STANDARD
CON(C)	CONCRETE	MH(S)	MANHOLE(S)	SUB	SPRINGFIELD UTILITY BOARD
CONST	CONSTRUCTION	MHSD	MANHOLE STORM DRAIN	S/W	SIDEWALK
COP	COPPER	MHSS	MANHOLE SANITARY		
COS	CITY OF SPRINGFIELD		SEWER	TEL/T	TELEPHONE
CPLG	COUPLING	MIN	MINIMUM	TB	THRUST BLOCK
CR	CRUSHED ROCK	MJ	MECHANICAL JOINT	TEMP	TEMPORARY
CV	CHECK VALVE	MUTCH	MANUAL ON UNIFORM TRAFFIC CONTROL DEVICES	THK	THICK
CY	CUBIC YARD			THRU	THROUGH
				TV	TELEVISION
D	DRAIN			TYP	TYPICAL
DET	DETAIL	NTS	NOT TO SCALE		
DI	DUCTILE IRON			VERT	VERTICAL(LY)
DIA/ø	DIAMETER	OC	ON CENTER		
DR	DRIVE	OD	OUTSIDE DIAMETER	W	WATER
DWG	DRAWING	ODOT	OREGON DEPARTMENT OF TRANSPORTATION	W/	WITH
DWY	DRIVEWAY			W/IN	WITHIN
		OVHD	OVERHEAD UTILITY	W/O	WITHOUT
EA	EACH			W/M	WATER METER
EL	ELEVATION	P	POWER		
ELEC/E	ELECTRICAL	PCC	PORTLAND CEMENT CONCRETE		
EOP	EDGE OF PAVEMENT				
EQ	EQUAL	PE	PLAIN END		
EQUIP	EQUIPMENT	PERM	PERMANENT		
ESMT	EASEMENT	P/L	PROPERTY LINE		
EX	EXISTING	POLY	POLYETHYLENE		
		PROP	PROPOSED		
FAB	FABRICATE	PRESS	PRESSURE		
FD	FLOOR DRAIN	PROP	PROPOSED		
FH	FIRE HYDRANT	PS	PUMP STATION		
FIN GR	FINISHED GRADE	PUGD	UNDERGROUND POWER		
FL	FLOW LINE	PV	PLUG VALVE		
FLG	FLANGE(D)	PVC	POLYVINYL CHLORIDE		
FM	FORCE MAIN	PVMT	PAVEMENT		
FT	FOOT				
FTG	FITTING				

VICINITY MAP

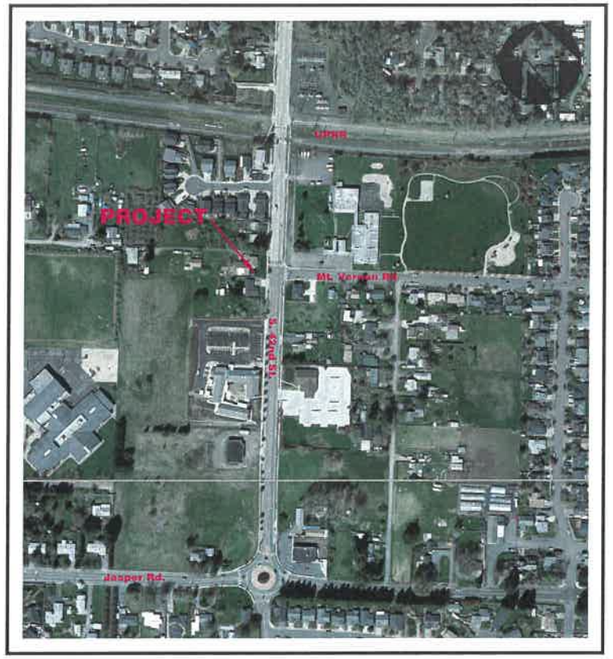

SHEET INDEX

TITLE SHEET	SHT. P1
GENERAL NOTES	SHT. P2
ELECTRICAL PLAN	SHT. P3
ST. LIGHTING & RRFB LEGEND	SHT. P4
EROSION CONTROL NOTES	SHT. E1
EROSION CONTROL	SHT. E2

No.	Revision/Issue	Date
DRAWN: CJG		

NOTE:

UTILITY LOCATIONS ARE APPROXIMATE
DO NOT
SCALE OR LOCATE UTILITY LINES OR MAINS FROM THESE DRAWINGS
CALL FOR UTILITY LOCATES 811 or (1-800-332-2344)

THE CONTRACTOR SHALL BE RESPONSIBLE FOR DETERMINING UTILITY LOCATIONS PRIOR TO BEGINNING OF CONSTRUCTION. THESE PLANS MAY NOT SHOW ALL UTILITIES OR THE CORRECT LOCATIONS.

P21149 BIKE/PED SAFETY RRFB/CROSSING CONSTRUCTION (S. 42ND ST. @ MT. VERNON PED CROSSING PORTION)

City of Springfield

PUBLIC WORKS / ENGINEERING
225 FIFTH STREET, SPRINGFIELD, OR 97477
PHONE (541) 726-3753 FAX (541) 736-3689
INTERNET www.springfield-or.gov

ENGINEERS STAMP

REGISTERED PROFESSIONAL ENGINEER
54699PE
OREGON
JULY 15, 2003
JEFFREY ALAN PASCHALL
12-31-20

EXPIRATION DATE: 12-31-20

SHEET P1

GENERAL NOTES

A. ALL MATERIALS AND WORKMANSHIP WITHIN THE PUBLIC RIGHT-OF-WAY OR PUBLIC EASEMENTS SHALL MEET STANDARD SPECIFICATIONS FOR CONSTRUCTION, AS SPECIFIED IN SECTION 'A' OF THE SPECIAL PROVISIONS IN ADDITION TO ALL OTHER SPECIFICATIONS REFERENCED OR INCLUDED, AND IN ADDITION TO THESE PLANS.

B. OREGON LAW REQUIRES THE CONTRACTOR TO FOLLOW RULES ADOPTED BY THE OREGON UTILITY NOTIFICATION CENTER. THESE RULES ARE SET FORTH IN OAR 952-001-0010 THROUGH OAR 952-001-0100. THE CONTRACTOR MAY OBTAIN COPIES OF THE RULES BY CALLING THE CENTER. NOTE: THE TELEPHONE NUMBER FOR THE OREGON UTILITY NOTIFICATION CENTER IS (800) 332-2344 OR 811.

C. LOCATION AND/OR DEPTH OF EXISTING UTILITIES SHOWN ON PLANS ARE APPROXIMATE. ALL UTILITIES MAY NOT APPEAR ON PLANS. IT IS THE CONTRACTOR'S RESPONSIBILITY TO CONTACT ALL UTILITY COMPANIES FOR UNDERGROUND LOCATION OF FACILITIES AT LEAST 48 HOURS PRIOR TO EXCAVATING OR "POTHOLING". THE "ONE-CALL" NUMBER IS 332-2344 OR 811.

D. CONTRACTOR SHALL BE RESPONSIBLE FOR COORDINATION WITH UTILITY COMPANIES ON THE TIMING OF INSTALLATION OF THEIR FACILITIES.

E. SPRINGFIELD CODE 10.2.1 REQUIRES NOTIFICATION OF OPEN TRENCHING FOR THE PROJECT TO ALLOW POSSIBLE COMMUNICATION CABLE INSTALLATION.

F. THE CONTRACTOR SHALL PROVIDE ALL TRAFFIC CONTROL DEVICES NECESSARY TO PROTECT AND SAFEGUARD THE PUBLIC AND WORKERS AGAINST INJURY AND PROTECT THE WORK AGAINST DAMAGE. ALL TEMPORARY TRAFFIC CONTROL SIGNING AND DEVICES SHALL BE IN PLACE PRIOR TO BEGINNING WORK. ALL TRAFFIC CONTROL SHALL CONFORM TO THE MANUAL ON UNIFORM TRAFFIC CONTROL DEVICES FOR STREETS AND HIGHWAYS (MUTCD), CURRENT EDITION, AS SUPPLEMENTED AND AMENDED BY THE OREGON SUPPLEMENTS. FLAGGING SHALL BE PERFORMED AS SHOWN IN THE "OREGON TEMPORARY TRAFFIC CONTROL HANDBOOK FOR OPERATIONS OF THREE DAYS OR LESS", 2011 OR CURRENT EDITION. THE CONTRACTOR SHALL BE RESPONSIBLE FOR ANY REQUIRED TRAFFIC CONTROL AS FIELD CONDITIONS WARRANT. THE CONTRACTOR SHALL SUBMIT A TRAFFIC CONTROL PLAN AT THE PRE-CONSTRUCTION CONFERENCE FOR CITY REVIEW AND APPROVAL.

G. ALL SANITARY AND STORM SEWER CONNECTIONS TO EXISTING CITY OWNED FACILITIES (PIPE, CATCH BASINS, MANHOLES, ETC.) SHALL BE INSPECTED BY THE CONTRACTOR AND THE CITY'S PUBLIC WORKS MAINTENANCE DEPARTMENT PRIOR TO HOOK UP. CONTACT MAINTENANCE AT (541-726-3761) OR CITY CONSTRUCTION INSPECTOR NO LESS THAN 48 HOURS PRIOR TO DESIRED INSPECTION TIME.

H. WHERE CONNECTING TO AN EXISTING PIPE, THE CONTRACTOR SHALL EXPOSE THE END OF THE EXISTING PIPE AND ALLOW THE ENGINEER TO VERIFY EXACT LOCATION AND ELEVATION, CONDITION, AND POSITIVE FLOW BEFORE LAYING ANY NEW PIPE IN THAT SYSTEM.

I. THE SEWER GRADE SHALL BE PER THE PLANS AND SPECIFICATIONS AND WITH THE MINIMUM COVER AS SHOWN ON THE PLANS.

J. THE CONTRACTOR SHALL INTERNALLY TELEVISION INSPECT THE SEWER AFTER ALL BACKFILL AND BEFORE THE FINAL LIFT OF ASPHALT PAVING. THE CONTRACTOR SHALL SUPPLY THE CITY WITH A WRITTEN T.V. REPORT AND VIDEO TAPE OR DVD FOR CITY APPROVAL AT LEAST 2 WORKING DAYS BEFORE THE PRE-PAVING MEETING.

K. CONTRACTOR TO SCHEDULE A PRE-PAVING CONFERENCE 24 HOURS PRIOR TO PAVING. CONTACT THE CONSTRUCTION INSPECTOR.

L. ALL JOINTS BETWEEN EXISTING AND NEW ASPHALT PAVING SHALL BE SEALED WITH POLYMERIZED ASPHALT AND SANDED TO PREVENT PICK UP.

M. COMPACTION REQUIREMENTS:

LAYER	RATE	TEST
SUBGRADE	95%	T99
CRUSHED ROCK	95%	T180
ASPHALT (LOCAL)	90%	RICE
ASPHALT (COLLECTOR/ARTERIAL)	92%	RICE

N. CONCRETE COMPRESSIVE STRENGTH REQUIREMENTS (PSI):

CONCRETE USE	FIELD	LABORATORY
SIDEWALK/ADA RAMPS	3000	3450
CURBS/GUTTERS	3500	4025
DRIVEWAYS	3500	4025
PAVEMENT	4000	4600

O. THIS PROJECT SHALL COMPLY WITH THE AMERICAN DISABILITIES ACT REQUIREMENTS SUCH AS INCORPORATION OF DESIGN CRITERIA FOR RAMPS, MAXIMUM PROFILE AND CROSS SECTION SLOPES FOR SIDEWALKS, UPGRADING EXISTING FACILITIES WHERE MAJOR CONSTRUCTION IS OCCURRING, AND BUILDING WARNING FOR OBJECTS IN SIDEWALK SUCH AS CURBING OR LANDSCAPING AROUND MAILBOXES.

P. CONTRACTOR IS RESPONSIBLE TO OBTAIN APPLICABLE PERMITS FROM OTHER AGENCIES WITH JURISDICTIONS SUCH AS LANE COUNTY, OREGON DEPARTMENT OF TRANSPORTATION, OREGON DIVISION OF STATE LANDS, THE ARMY CORPS OF ENGINEERS, OR THE DEPARTMENT OF ENVIRONMENTAL QUALITY.

Q. ALL IMPROVEMENTS THAT WILL BE PRIVATELY OWNED AND MAINTAINED WILL BE BOUND BY THE CURRENT REQUIREMENTS OF THE STATE OF OREGON STRUCTURAL SPECIALITY CODE, PLUMBING SPECIALTY CODE, AND/OR CITY OF SPRINGFIELD BUILDING DIVISION REQUIREMENTS. CONTRACTOR IS RESPONSIBLE TO OBTAIN APPLICABLE PERMITS FROM OTHER CITY DEPARTMENTS PRIOR TO DOING PRIVATE WORK.

R. EROSION CONTROL MEASURES SHALL BE IN PLACE PRIOR TO THE START OF CONSTRUCTION. SEE EROSION CONTROL PLAN.

S. STREET TREES: ONLY STREET TRESS WITH A MINIMUM TRUNK CALIPER OF 2 IN. MEASURED 6 IN. ABOVE THE ROOT STEM SHALL BE SELECTED FOR PLANTING.

T. A PRE-CONSTRUCTION CONFERENCE IS REQUIRED BEFORE START OF CONSTRUCTION. ALL UTILITIES, CONTRACTORS, AND CITY REPRESENTATIVES SHALL HAVE RECEIVED THE FINAL APPROVED PLANS AT LEAST 5 WORKING DAYS PRIOR TO THE PRE-CONSTRUCTION CONFERENCE.

U. THE ENGINEER AND/OR CITY HAVE THE RIGHT TO REQUIRE ADDITIONAL WORK NOT SHOWN HEREIN BUT NECESSARY FOR THE SUCCESSFUL COMPLETION OF THE PROJECT. STD. SPEC. 104.08.

V. REQUESTS BY THE CONTRACTOR FOR CHANGES SHALL BE APPROVED BY THE ENGINEER AND THE CITY IN WRITING PRIOR TO IMPLEMENTATION.

W. CONTRACTOR SHALL SUBMIT EVIDENCE OF INSURANCE IN ACCORDANCE WITH THE STANDARD SPECIFICATION TO THE CITY FOR APPROVAL PRIOR TO BEGINNING WORK.

X. CONTRACTOR SHALL BE AWARE IF PAVING IS NOT SCHEDULED OR DOES NOT OCCUR PRIOR TO OCTOBER 15TH, WET WEATHER PROVISIONS INCLUDING ADDITIONAL ROCK SUBSTRUCTURE AND GEOTEXTILE FABRIC SHALL BE USED. REFER TO STANDARD SPECIFICATION SHEET 301.1.01 AND THE TYPICAL CROSS SECTIONS CONTAINED HEREIN FOR DETAILS.

Y. THE CONTRACTOR SHALL VERIFY EACH EXISTING SANITARY AND STORM CONNECTION.

No.	Revision/Issue	Date
DRAWN: CJG		

NOTE:

UTILITY LOCATIONS ARE APPROXIMATE
DO NOT
SCALE OR LOCATE UTILITY LINES OR MAINS FROM THESE DRAWINGS
CALL FOR UTILITY LOCATES 811 or (1-800-332-2344)

THE CONTRACTOR SHALL BE RESPONSIBLE FOR DETERMINING UTILITY LOCATIONS PRIOR TO BEGINNING OF CONSTRUCTION. THESE PLANS MAY NOT SHOW ALL UTILITIES OR THE CORRECT LOCATIONS.

P21149 BIKE/PED SAFETY RRFB/CROSSING CONSTRUCTION (S. 42ND ST. @ MT. VERNON PED CROSSING PORTION)

City of Springfield
PUBLIC WORKS / ENGINEERING
225 FIFTH STREET, SPRINGFIELD, OR 97477
PHONE (541) 726-3753 FAX (541) 736-3689
INTERNET www.springfield-or.gov

ENGINEERS STAMP

REGISTERED PROFESSIONAL ENGINEER
54699PE
OREGON
JULY 15, 2003
JEFFREY ALAN PASCHALL

EXPIRATION DATE: 12-31-20

SHEET
P2

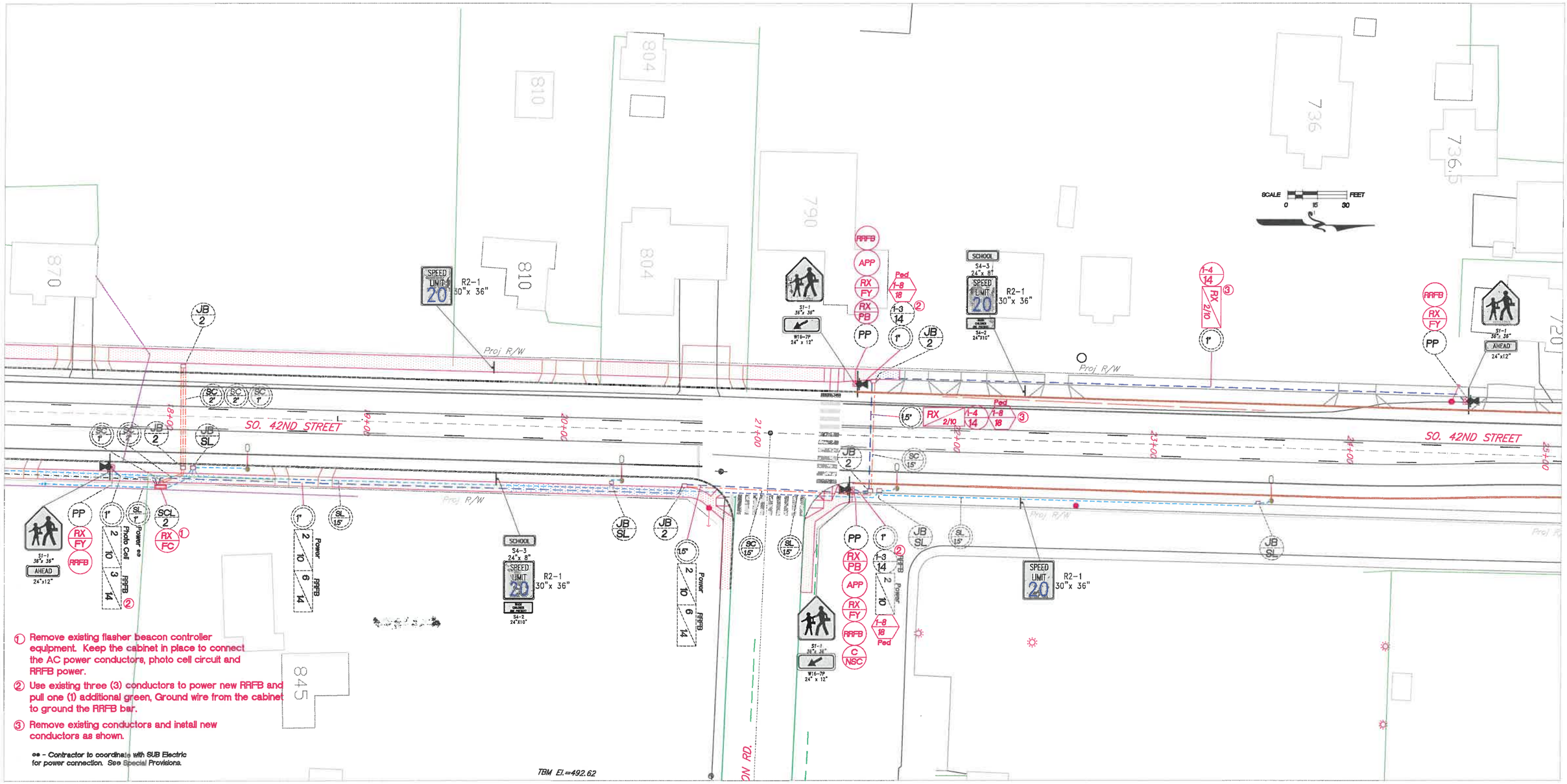

① Remove existing flasher beacon controller equipment. Keep the cabinet in place to connect the AC power conductors, photo cell circuit and RRFB power.

② Use existing three (3) conductors to power new RRFB and pull one (1) additional green, Ground wire from the cabinet to ground the RRFB bar.

③ Remove existing conductors and install new conductors as shown.

ee – Contractor to coordinate with SUB Electric for power connection. See Special Provisions.

Engineering & Transportation Division Services

SPRINGFIELD OREGON

No.	Revision/issue	Date
DRAWN: DRB		

NOTE:

UTILITY LOCATIONS ARE APPROXIMATE
DO NOT
SCALE OR LOCATE UTILITY LINES OR MAINS FROM THESE DRAWINGS
CALL FOR UTILITY LOCATES
811 or (1-800-332-2344)

THE CONTRACTOR SHALL BE RESPONSIBLE FOR DETERMINING UTILITY LOCATIONS PRIOR TO BEGINNING OF CONSTRUCTION. THESE PLANS MAY NOT SHOW ALL UTILITIES OR THE CORRECT LOCATIONS.

P21149 BIKE/PED SAFETY RRFB/CROSSING CONSTRUCTION (S. 42ND ST. @ MT. VERNON PED CROSSING PORTION)

City of Springfield
PUBLIC WORKS / ENGINEERING
225 FIFTH STREET, SPRINGFIELD, OR 97477
PHONE (541) 726-3753 FAX (541) 736-3689
INTERNET www.springfield-or.gov

ENGINEERS STAMP
REGISTERED PROFESSIONAL ENGINEER
19,697PE
OREGON
MAY 5, 1998
BRIAN F. BARNETT
EXPIRES 12-31-19

SHEET
P3

Street Lighting & RRFB School Crossing Legend

LA / L — Install (L) ft. luminaire arm.

HPS — Install 150 Watt High Pressure Sodium (HPS) luminaire. 30 Ft. mounting height. (See Special Provisions)

WP — Install 35 Ft. Class 4 treated wood lumination pole.

WP / SUB — Existing SUB utility pole. NOT a bid item.

JB / 1 — Install 17 x 40 x 12" precast poly composite junction box.

JB / 2 — Install 22 x 42 x 13" precast concrete junction box

JB / PF — Junction Box, see pedestrian flasher plan.

N / G — Install (N-Number) No. (G=AWG wire size) type THWN conductors with green insulated ground

X-N / G — Install (X=number of cables) cables with (N=number) AWG No. (G=AWG wire size) type 18AWG BELDON 27601A.

X-N / G — Install (X=number of cables) control cables with (N=number) AWG No. (G=AWG wire size) conductors.

S — Install size (S) electrical conduit.

SL / S — Street lighting conduit size (S), see lumination plan.

PF / S — Pedestrian flasher conduit size (S), see Pedestrian Flasher plan.

SC / S — Install (S) size spare conduit with 16 AWG tracer wire, plug ends.

SCL / 2 — Install service cabinet, 120/240 volt, for illumination, flasher and irrigation circuits.

PP — Install pedestrian signal pedestal with frangible base.

PB — Install 'H' mounted pedestrian push button.

FY / S — Install (S) inch flashing yellow beacon. (Special Provisions)

FC — Install flash controller unit. (Special Provisions)

C / NCS — Install RRFB Network System Controller (NSC-Special Provisions).

RRFB — Install Rapid Rectangle Flashing Beacon (RRFB-Special Provisions)

APP — Install accessible pedestrian pushbutton (APP). Install pole/post mounted, pre-approved APS, Polara Model-X Crosswalk Button Station with standard walking man and directional arrow front plate.

TC — Install terminal cabinet (TC) and rewire VAC power and RRFB circuits.

RX / PB — Remove existing 'H' mounted pedestrian push button.

RX / FY — Remove existing 12" flashing yellow beacon.

RX / FC — Remove existing flash controller unit. (Special Provisions)

NOTES:

C / NCS — Dashed symbols are existing items.

RX / FC — RED symbols are new, bid items.

S = Size shown
N = Number shown
L = Length shown
G = AWG wire gage
●— = New SUB pole with anchor

Engineering & Transportation Division Services

SPRINGFIELD OREGON

No.	Revision/Issue	Date
DRAWN: DRB		

NOTE:

UTILITY LOCATIONS ARE APPROXIMATE
DO NOT
SCALE OR LOCATE UTILITY LINES OR MAINS FROM THESE DRAWINGS
CALL FOR UTILITY LOCATES
811 or (1-800-332-2344)

THE CONTRACTOR SHALL BE RESPONSIBLE FOR DETERMINING UTILITY LOCATIONS PRIOR TO BEGINNING OF CONSTRUCTION.
THESE PLANS MAY NOT SHOW ALL UTILITIES OR THE CORRECT LOCATIONS.

P21149 BIKE/PED SAFETY RRFB/CROSSING CONSTRUCTION (S. 42ND ST. @ MT. VERNON PED CROSSING PORTION)

City of Springfield
PUBLIC WORKS / ENGINEERING
225 FIFTH STREET, SPRINGFIELD, OR 97477
PHONE (541) 726-3753 FAX (541) 736-3689
INTERNET www.springfield-or.gov

ENGINEERS STAMP
REGISTERED PROFESSIONAL ENGINEER
19697PE
OREGON
MAY 5, 1998
BRIAN F. BARNETT
EXPIRES 12-31-19

SHEET P4

NOTES:

1. PLACE INLET/CATCH BASIN PROTECTION AT EXISTING FIXTURES (SEE DETAIL ON SHEET E2.)

GENERAL NOTES:

1. CONCRETE WASHOUTS ARE NOT PROVIDED ON THIS PROJECT
2. SAW CUTTING SLURRY IS TO BE VACUUMED
3. ANY AREAS OF EXPOSED SOILS. INCLUDING ROADWAY EMBANKMENTS, THAT WILL NOT BE DISTURBED FOR TWO DAYS DURING THE WET SEASON (OCTOBER 1 TO APRIL 30) OR SEVEN DAYS DURING THE DRY SEASON (MAY 1 TO SEPTEMBER 30) SHALL BE IMMEDIATELY STABILIZED WITH AN APPROVED ESC METHOD (SEEDING & MULCHING WITH STRAW, BARK, COMPOST, OR PLASTIC COVERING, ETC.).

EROSION CONTROL STANDARD NOTES:

A. Approval of this Erosion and Sedimentation Control Plan (ESCP) does not constitute an approval of permanent road or drainage design (e.g., size and location of roads, pipes, restrictors, channels, retention facilities, utilities, etc.).

B. Approval of this ESCP does not relieve the permit holder and or the contractor from all other permitting requirements. Prior to beginning construction activities, all other necessary approvals shall be obtained.

C. An inspection of the erosion control measures by City LDAP staff is required prior to any ground disturbance on the site.

D. The erosion and sediment control measures shown on the plan are the minimum requirements for anticipated site conditions. During the construction period, these measures shall be upgraded as needed for unexpected storm events and to ensure that sediment and sediment-laden water does not leave the site.

E. The implementation of the ESCP and the construction, maintenance, replacement, and upgrading of the erosion and sediment control measures is the responsibility of the permit holder and or the contractor until all construction is completed and accepted by the City and vegetation/landscaping is established per the required warranty period.

F. In the event the ESC facilities identified on the ESCP are not functioning properly, the contractor is responsible for immediately implementing changes to the ESCP as directed by the ESCP engineer or his inspector. The engineer, his inspector or the City may stop all construction activity on site until the erosion problem is corrected and all ESC facilities are functioning properly. If the contractor does not immediately implement changes to the ESCP identified by the ESCP engineer or his inspector, the City may implement the necessary changes and require payment from the contractor prior to project acceptance by the City.

G. The boundaries of the clearing limits shown on this plan shall be clearly flagged in the field by the engineer prior to construction. During the construction period, no disturbance beyond the flagged clearing limits shall be permitted. The flagging shall be maintained by the permit holder and or the contractor for the duration of construction.

H. The erosion and sediment control measures on active sites shall be inspected and maintained daily and within the 24 hours after any storm event of greater than 0.5 inches of rain per 24 hour period. Measures shall be inspected by the permit holder and or the contractor after each rainfall and at least daily during prolonged rainfall. Any required repairs or adjustments shall be made immediately. The erosion and sediment control measures on inactive sites shall be inspected a minimum of once every two (2) weeks or within 48 hours following a storm event. Written records shall be kept of weekly reviews of the ESC facilities during the wet season (October 1 to April 30) and of monthly reviews during the dry season (May1 to September 30).

I. All erosion and sediment control measures shall be protected from damage at all times. Control measures shall remain in place until permanent or temporary re-vegetation has been stabilized. Any measure that is damaged or destroyed shall be repaired or replaced immediately.

J. Any areas of exposed soils, including roadway embankments, that will not be disturbed for two days during the wet season (October 1 to April 30) or seven days during the dry season (May 1 to September 30) shall be immediately stabilized with an approved ESC method (seeding & mulching with straw, bark, compost, or plastic covering, etc.).

K. A supply of materials necessary to meet compliance and implement the LDAP or other best management erosion practices under all weather conditions shall be maintained at all times on the construction site.

L. No hazardous substances, such as paints, thinners, fuels and other chemicals shall be released onto the site, adjacent properties, or into water features, the City's storm water system, or related natural resources.

M. Street sweeping shall be performed as needed or when directed by the City inspector to ensure public right-of-ways are kept clean and free of debris. Street flushing is prohibited.

N. When trucking saturated soils from the site, either water-tight trucks shall be used or loads shall be drained on site until dripping has been reduced to no more than one gallon per hour. Sediment laden water will not be allowed to enter the storm water system

O. Extracted ground water from excavated trenches shall be disposed of in a suitable manner without damage to adjacent property, public storm water system, water features, and related natural resources. Approval of a dewatering system does not guarantee that it will meet compliance or be acceptable for use in all situations. Modifications to the dewatering system will be required if compliance can not be met. At no time will sediment laden water be allowed to leave the construction site.

P. At no time shall more than one foot of sediment be allowed to accumulate within a catch basin. All catch basins and conveyance lines shall be cleaned prior to paving. The cleaning operation shall not flush sediment laden water into the downstream system.

Q. Any required stabilized construction entrances and roads shall be installed at the beginning of construction and maintained for the duration of the project. Additional measures, such as wash pads, may be required to ensure that all paved areas are kept clean for the duration of the project.

R. Any permanent flow control facility used as a temporary settling basin shall be modified with the necessary erosion control measures and shall provide adequate storage capacity.

S. Where straw mulch for temporary erosion control is required, it shall be applied at a minimum thickness of two to three inches.

T. In preparation of the wet season, all disturbed areas shall be reviewed to identify which ones can be seeded in preparation for the winter rains. A sketch map of those areas to be seeded and those areas to remain uncovered shall be submitted to the City by September 15. The City can require seeding of additional areas in order to protect surface waters, adjacent properties, or drainage facilities. Disturbed areas identified for seeding shall be seeded prior to the beginning of the wet season (October 1).

No.	Revision/Issue	Date
DRAWN: CJG		

NOTE:

UTILITY LOCATIONS ARE APPROXIMATE
DO NOT
SCALE OR LOCATE UTILITY LINES OR MAINS FROM THESE DRAWINGS
CALL FOR UTILITY LOCATES 811 or (1-800-332-2344)

THE CONTRACTOR SHALL BE RESPONSIBLE FOR DETERMINING UTILITY LOCATIONS PRIOR TO BEGINNING OF CONSTRUCTION. THESE PLANS MAY NOT SHOW ALL UTILITIES OR THE CORRECT LOCATIONS.

P21149 BIKE/PED SAFETY RRFB/CROSSING CONSTRUCTION (S. 42ND ST. @ MT. VERNON PED CROSSING PORTION)

City of Springfield
PUBLIC WORKS / ENGINEERING
225 FIFTH STREET, SPRINGFIELD, OR 97477
PHONE (541) 726-3753 FAX (541) 736-3689
INTERNET www.springfield-or.gov

ENGINEERS STAMP

REGISTERED PROFESSIONAL ENGINEER
54699PE
OREGON
JULY 15, 2003
JEFFREY ALAN PASCHALL
2-15-15

EXPIRATION DATE: 12-31-20

SHEET
E1

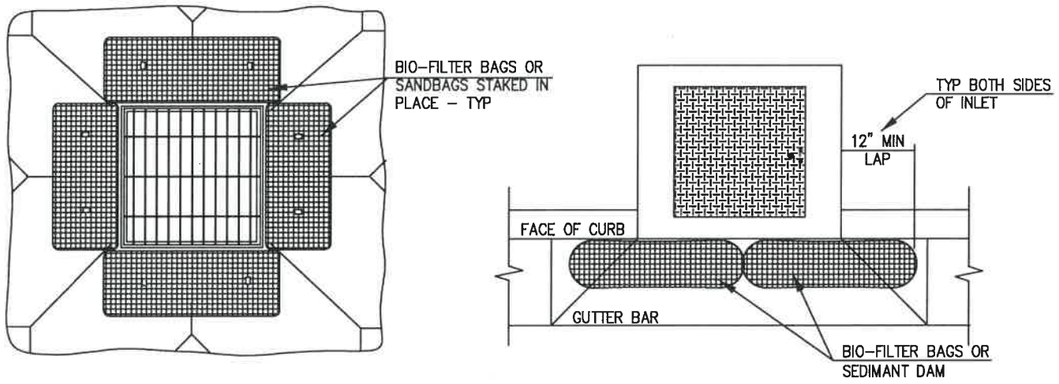

NOTES
1. PRIOR TO 1st PAVEMENT LIFT, REMOVE BIO-BAG/SANDBAG BARRIERS AND INSTALL BASIN INSERT BAG OR CURB INLET SEDIMENT DAM AT ALL INLET STRUCTURES.

1 DRAINAGE INLET STRUCTURE PROTECTION

NO SCALE

INLET PROTECTION

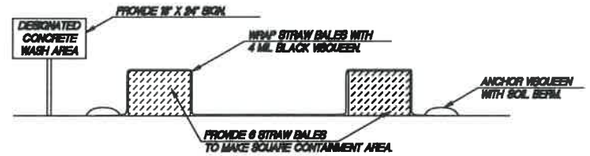

CONCRETE WASH AREA DETAIL

N.T.S.

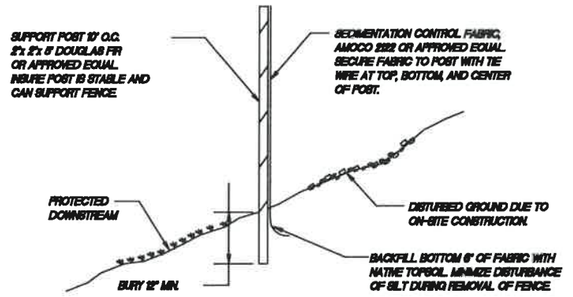

SEDIMENTATION CONTROL FABRIC TYPE SILT FENCE

N.T.S.

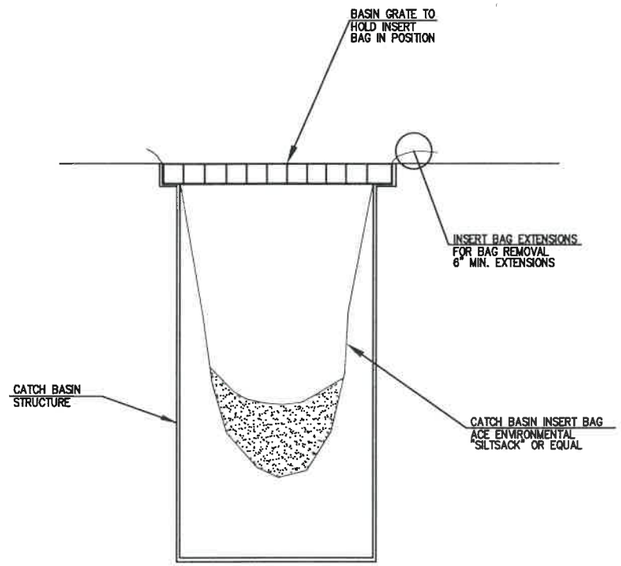

1 CATCH BASIN INSERT BAG

NO SCALE

No.	Revision/Issue	Date
DRAWN: CJG		

NOTE:

UTILITY LOCATIONS ARE APPROXIMATE
DO NOT
SCALE OR LOCATE UTILITY LINES OR MAINS FROM THESE DRAWINGS
CALL FOR UTILITY LOCATES
811 or (1-800-332-2344)

THE CONTRACTOR SHALL BE RESPONSIBLE FOR DETERMINING UTILITY LOCATIONS PRIOR TO BEGINNING OF CONSTRUCTION.
THESE PLANS MAY NOT SHOW ALL UTILITIES OR THE CORRECT LOCATIONS.

P21149 BIKE/PED SAFETY RRFB/CROSSING CONSTRUCTION (S. 42ND ST. @ MT. VERNON PED CROSSING PORTION)

City of Springfield
PUBLIC WORKS / ENGINEERING
225 FIFTH STREET, SPRINGFIELD, OR 97477
PHONE (541) 726-3753 FAX (541) 736-3689
INTERNET www.springfield-or.gov

ENGINEERS STAMP

REGISTERED PROFESSIONAL ENGINEER
54699PE
OREGON
JULY 15, 2003
JEFFREY ALAN PASCHALL
7-15-04

EXPIRATION DATE: 12-31-20

SHEET
E2