City of Springfield
Public Improvement Project

Invitation to Bid for:

P21067
10th and N Sewer Upgrade – Phase 2

The information provided is an abridged version of the complete Invitation to Bid and is provided for review and informational purposes only. To submit a bid for consideration, a complete set of bid documents is required.

A complete set of bid documents may be viewed or purchased at the address shown below:

City of Springfield
Development and Public Works Department
225 Fifth Street
SE Quad
Springfield, OR 97477

Contact: Terri White at 541-726-3628 or twhite@springfield-or.gov

City of Springfield
Community Development Division

SPECIFICATIONS
for

P21067

10th and N Sewer Upgrade – Phase 2

MANDATORY PRE-BID MEETING		**BID OPENING**	
Date:	**February 6, 2014**	**Date:**	**March 5, 2014**
Time:	**9:30 a.m.**	**Time:**	**2:00 p.m.**
Location:	**City of Springfield**	**Location:**	**City of Springfield**
	City Hall		**City Hall**
	Jesse Main Room		**Library Meeting Room**
	225 Fifth Street		**225 Fifth Street**
	Springfield, OR 97477		**Springfield, OR 97477**

The deadline for submission of project specific questions prior to bid opening is February 19, 2014 at 2:00 p.m. as specified in Section 3.3 of the Instruction to Bidders.

This Project is funded in full or in part by:

☐ State Funds
☑ Neither State nor Federal Funds

Please Take Note: All information required must be submitted as directed.

For your Bid to be considered responsive by the City of Springfield you must include all documents included in the Invitation to Bid with your Bid. Additionally, any addendums or revisions must be acknowledged and submitted with your Bid. *The only exception to this is any plans or drawings, which are not required to be submitted as a part of your Bid.*

All documents requesting information must be completed in full and signed where appropriate. *The only exceptions to this requirement are the sample Performance Bond, Payment Bond and Contract documents which are provided here as a reference. However, if you are awarded the Bid, you will be required to submit fully executed copies of these documents upon request.*

A complete description of submittal requirements can be found in the Instruction to Bidders document included in this request for bid under the heading; **5. Bid.**

CITY OF SPRINGFIELD, OREGON
Invitation to Bidders

Public Works Improvement Project

Sealed bids will be received at the office of the Finance Director, Robert Duey at the City of Springfield Finance Department, 225 Fifth Street, Springfield, OR 97477, until, but no later than, 2:00 p.m. Local Time, the 5th day of March, 2014 and opened at 2:05 p.m. the same day, for the construction of the following public works improvement project in the City of Springfield:

Project No. P21067 Title: 10th and N Sewer Upgrade – Phase 2

Description: Place 3,250 linear feet of new 24-inch sanitary sewer pipe and 15 new sanitary sewer manholes by open cut method. Place 140 linear feet of new 8-inch storm sewer pipe, 120 linear feet of new 10-inch storm sewer pipe, 10 linear feet of new 12-inch storm sewer pipe, and 10 linear feet of new 15-inch storm sewer pipe by open-cut method. Remove and replace with new, 2 catch basins and 1 storm sewer manhole. Slurry seal and street repair on 2 blocks of street, and install 2 blocks of new pathway.

Bid documents are available from the Department of Development and Public Works, City of Springfield, 225 Fifth Street, Springfield, OR 97477, for a non-refundable fee of $50.00 and are available for viewing at this location. Bid documents available on line at http://www.springfield-or.gov/DPW/InvitationBid.htm and those on file at plan centers are incomplete and cannot be used to submit bids. The 1994 edition, as most recently amended, of the City's Standard Construction Specifications, with subsequent revisions, are available for a fee of $40.00 or can be viewed on-line at http://www.springfield-or.gov/DPW/StandardConstructionSpecifications.htm.

A **Mandatory** pre-bid meeting will be held on February 6, 2014 at 9:30 a.m. in the Jesse Maine meeting room.

All questions should be addressed to Terri White, Engineering Assistant, at 541-726-3628 or twhite@springfield-or.gov. The deadline for submission of questions regarding this Invitation to Bid is February 19, 2014 at 2:00 p.m. Contact with any other City officials may be grounds for disqualification of bid.

No Bid will be received or considered by the City unless the bidder has a current, valid certificate of registration issued by the Construction Contractor's Board as defined in ORS 701.005 and/or a valid landscape contractors license as defined in ORS 671.520 by the State Landscape Contractor's Board, as applicable, at the time the Bid is made and unless the bid contains a statement by the bidder as part of his/her bid that the provisions required by ORS 279C.838 through ORS 279C.870 shall be included in his/her contract. In accordance with ORS 279C.365, the City of Springfield will require that each bid must contain a statement as to whether the bidder is a resident bidder, as defined in ORS 279A.120.

The City of Springfield encourages contractors, sub-contractors and vendors who are minority, woman-owned and emerging small businesses to participate in City projects.

The City of Springfield may reject any or all bids not in compliance with all prescribed public bidding procedures and requirements, including the requirement to demonstrate the bidder's responsibility under ORS 279C.375, or waive minor irregularities not affecting substantial rights and may reject for good cause any or all bids upon a finding of the City of Springfield it is in the public interest to do so and accept such bids that in the opinion of the Springfield City Council are in the best interest of the City.

Bids will be accepted and awarded in accordance with the City of Springfield's document on general conditions and standard specifications for public works construction.

Note: If applicable to this project, the First-Tier Subcontractor Form must be completed in full and submitted by the specified deadline or the bid will be rejected.

Robert J. Duey

ROBERT J. DUEY
Finance Director

Published: Daily Journal 01/21/14 and 01/27/14
Register Guard Publishing 01/20/14 and 01/27/14

Solicitation Number 1032

TABLE OF CONTENTS

State and Local Funding

1. Invitation to Bidders
2. Bid Submittal, Terms and Declarations
3. Instruction to Bidders
4. Contract (Sample)
5. Prevailing Wage Rate Information
6. Special Provisions – Section A; General Requirements
7. Special Provisions – Section B; General Conditions
8. Special Provisions – Section C; Measurement and Payment
9. Special Provisions – Section D; Site Preparation
10. Special Provisions – Section E; Pavement and Surface Restoration
11. Special Provisions – Section F; Sewer Diversion and By-Pass Pumping
12. Special Provisions – Section G; AC Pipe Removal
13. Special Provisions – Section H; Private Property Condition Documentation and Owner Approval
14. Special Provisions – Section I; Traffic Control
15. Special Provisions – Section J; Slurry Seal
16. Special Provisions – Section K; Crack Seal
17. Standard Drawings
18. Supplemental Information
    1) Heavy Duty Stop Logs
    2) Homeowner Approval and Release Form
    3) Traffic Control Plan
19. First Tier Subcontractor Disclosure Form
20. Financial Responsibility Form
21. Minority, Women and Emerging Small Business/Disadvantaged Business Enterprise Form
22. Bid Bond (Sample)

23. Performance Bond (Sample)
24. Payment Bond (Sample)
25. Addenda, if any

City of Springfield
225 Fifth Street
Springfield, OR 97477

Bid Submittal

Project No. P21067
Project Title: 10th and N Sewer Upgrade – Phase 2

Bid Items:

Item No.	Description	Approx. Quantity	Per	Unit Price	Total Price Extension
Construction Bid Items					
0057	Imported Topsoil Restoration	1	L.S.		
0060	Mobilization, Demobilization, Bonding and Insurance	1	L.S.		
0063	Clearing and Grubbing	1	L.S.		
0064	Erosion Control	1	L.S.		
0065	Construction Entrance	7	EACH		
0066	Lawn and Landscaping Restoration	1	L.S.		
0073	Excavation Below Grade	100	C.Y.		
0075	Common Excavation	100	C.Y.		
0086	Aggregate Base ¾ - 0	500	TON		
0096	Crack Seal	2,000	L.F.		
0099	Slurry Seal	3,300	S.Y.		
0103	Asphalt Pavement Restoration	780	TON		
0104	A.C. In Place Class C	23	TON		
0117	Remove and Replace Guardrail	1	L.S.		
0123	Concrete Valley Gutter	20	S.Y.		
0132	Concrete Curb and Gutters	460	L.F.		
0137	4-inch Concrete Sidewalk	1,700	S.F.		
0141	Handicap Ramps	900	S.F.		
0142	Truncated Domes for Handicap Ramps	12	EACH		
0153	Chain Link Fence	200	L.F.		
0155	Wood Fence	260	L.F.		
0160	Bollards	4	EACH		
0169	Seeding	1	L.S.		
0197	Saw-Cutting Existing Surface	13,000	L.F.		
0257	8-inch ASTM D3034 SDR 35 Sanitary Sewer	10	L.F.		
0260	15-inch ASTM D3034 SDR 35 Sanitary Sewer	10	L.F.		
0261	18-inch ASTM F679 Sanitary Sewer	10	L.F.		
0263	24-inch ASTM F679 Sanitary Sewer	3,250	L.F.		
0277	New 48-inch Sanitary Sewer Manhole	10	EACH		
0277a	Remove and Replace 48-inch Storm Sewer Manhole	1	EACH		
0278	New 60-inch Sanitary Sewer Manhole	1	EACH		
0279	New 72-inch Sanitary Sewer Manhole w/ Stop Logs	2	EACH		
0280	New 84-inch Sanitary Sewer Manhole	2	EACH		
0281	Traffic Rated Manhole Collar	12	EACH		
0296	8-inch ASTM D3034 SDR 35 Storm Sewer	140	L.F.		
0297	10-inch ASTM D3034 SDR 35 Storm Sewer	120	L.F.		
0298	12-inch ASTM D3034 SDR 35 Storm Sewer	10	L.F.		
0299	15-inch ASTM D3034 SDR 35 Storm Sewer	10	L.F.		
0331	Remove and Replace Catch Basin	2	EACH		
0861	Controlled Density Fill	1,444	C.Y.		
0862	Private Property Documentation	1	L.S.		
0866	Grading	1	L.S.		
				Construction Bid Items Total	

Traffic Bid Items					
0061	Temporary Traffic Control	1	L.S.		
0228	Plastic Markings	1	L.S.		
0236	Plastic Bicycle Pavement Markings	2	EACH		
0246	Install Street Signs	14	EACH		
				Traffic Bid Items Total	
			Project Bid Item Total:	**$**	

Terms, Declarations and Bid Submittal

Bidder's Understanding

Bidders shall determine for themselves all the conditions and circumstances affecting the projected cost of the proposed work by personal examination of the site, Contract documents, and by such other means they may deem to be necessary. It is understood and agreed that in the event the City has obtained information from data at hand regarding underground or other conditions or obstructions depicted in the Contract documents, there is no expressed or implied agreement that such conditions are fully or correctly shown, and the Bidder must take into consideration the possibility that conditions affecting the cost or quantity of work may differ from those indicated.

The Bidder is familiar with and is satisfied as to all federal, state and local laws and regulations that may affect cost, progress, and performance of the work.

Bid

The undersigned Bidder having examined the Specifications and Contractual Documents and having satisfied themselves as to all conditions to be encountered, hereby proposes to furnish all labor, material and equipment and perform all work necessary to complete Project No P21067 in accordance with this bid, the Contract Plans, City of Springfield Standard Construction Specifications, 1994 Edition, and all subsequent modifications, the Special Provisions, and all other Contractual Documents at the prices and on the terms herein contained.

The unit price bids are submitted with the understanding that the quantities stated are approximate and are given only as the basis of calculation for comparison of bids and determining that the unit prices are balanced and that final payment for all unit price bid items will be based on actual quantities.

It is understood that in the instance of a discrepancy between the unit price and the extension (total price extension) the unit price shall govern. The extension shall be determined by multiplying the unit price by the number of units (approximate quantity).

Bid Guarantee

As required by ORS 279C.365(4) each bid shall be accompanied by a Bid Bond, cash, or a certified or cashier's check written upon a bank in good standing and in a form acceptable to the City, payable to the Finance Director of the City of Springfield, Oregon, in an amount equal to at least 10 percent of the total amount of the Bid. Bid Bonds shall be issued by a surety company registered to issue bonds in the State of Oregon, and utilizing a bond form acceptable to the City. The City will accept AIA Document A310-2010. The Bid Bond may not be altered.

Such Bid Guarantee shall be forfeited and become the property of the City in case the Bidder shall fail or neglect to furnish a satisfactory Performance and/or Payment Bond issued by a viable bond company acceptable to the City as required by ORS 279C.380 and to execute the Contract within ten (10) days (Saturday, Sunday, and holidays excepted) after receiving Contract from the City for execution. For information regarding Performance and Payment Bond requirements see City of Springfield Contract document, Section 5. City Bonding.

Bid Acceptance Period
This bid will remain subject to acceptance for a period of 60 days after the bid opening, or for such longer period of time that the Bidder may agree to in writing upon request of the City.

Liquidated Damages
The City of Springfield and the Contractor agree that; (a) the amounts so fixed are reasonable forecasts of just compensation for the harm that is caused by the breach; (b) the harm that is caused by the breach is one that is incapable of or very difficult of accurate estimation; and, (c) the amount so fixed is not fixed as a penalty to coerce performance of the Contract but is rather intended to be a genuine pre-estimation of injury to the City of Springfield in lieu of performance within the contract time by the Contractor.

a. Delay
It is agreed by the City of Springfield and by the Contractor that the need exists for a damage provision in the event the Contractor fails to complete the work within the Contract time specified, or any extension thereof, by the City of Springfield. The City of Springfield and the Contractor further agree that the Contractor shall be liable to the City of Springfield for fixed, agreed and liquidated damages for each and every calendar day of delay in the amount of $1,000.00 per day in accordance with Subsection 108.07 of the Standard Construction Specifications.

b. Failure to Report Spills
The contractor also agrees to liquidated damages in the amount of $500.00 per incident for failure to report sewage spills plus an amount sufficient to reimburse the City for any civil and administrative penalties paid by the City as a result of the contractor's failure to report. Failure to report sewage spills may subject the City to (1) civil penalties of up to $32,500.00 per day of violation pursuant to Section 309(d) of the Clean Water Act, 33 U.S.C. § 1319(d); (2) administrative penalties of up to $11,000.00 per day for each violation, pursuant to Section 309(g) of the Clean Water Act, 33 U.S.C. § 1319(g); or (3) civil action in federal court for injunctive relief pursuant to Section 309(b) of the Clean Water Act, 33 U.S.C. § 1319(b).

Contract Time of Completion
The Contractor shall not begin work under this bid until written Notice to Proceed has been received. The Contractor shall complete the work under this bid within 90 consecutive working days from the date of actual commencement of work or the date occurring ten days after the date of the Notice to Proceed, whichever occurs first, or such other starting date as is fixed by the Notice to Proceed.

CONTRACTOR shall schedule work such that the flow control manhole, located south of the intersection of 13th Street and Centennial Boulevard, as shown on sheets 14A – 14C, will be installed prior to, or concurrently with, the start of the rest of the work on this project.

CONTRACTOR shall schedule work such that any and all work and restoration within the right of way is complete by October 15, 2014, including curb and gutter, sidewalk, asphalt, driveways, etc.

The Contractor shall apply for any extensions of time as specified in Subsection 108.06 of the Standard Construction Specifications.

Certifications
The undersigned hereby certifies that:

1.) If awarded the Contract, that they shall fully comply with all provisions regarding the prevailing wage rates as required by ORS 279C.800 to 279C.870 and/or 40 U.S.C. 2762 as applicable.

2.) The Contractor, Subcontractor, suppliers of materials or services, and others engaged by the contractors, shall comply at all times with and observe all such laws, ordinances, regulations, orders, and decrees; and shall hold harmless and indemnify the City of Springfield and its representatives against any claim or liability arising from or based on the violation of any such law, ordinance, regulation, order, or decree.

3.) In accordance with ORS 279C.505, the Contractor will;

a) Make payment promptly, as due, to all persons supplying to the Contractor labor or material for the performance of the work provided for in the Contract.

b) Promptly pay all contributions or amounts due the State Industrial Accident Fund, or private carrier of accident insurance, from such Contractor or Subcontractor incurred in the performance of the Contract. If a private carrier is used, the Contractor shall notify the Engineer as to the carrier's name and address before commencement of work.

c) Not permit any lien or claim to be filed or prosecuted against the state or a county, school district, municipality, municipal corporation or subdivision thereof, on account of any labor or material furnished.

d) Pay to the Department of Revenue all sums withheld from employees under ORS 316.167.

e) Have an employee drug testing program in place at the time of signing the contract and will maintain such drug testing program in place over the life of the Contract.

4.) In accordance with ORS 279C.530, the Contractor will;

a) Promptly, as due, make payments to any person, co-partnership, association or corporation, furnishing medical, surgical, and hospital care or other needed care and attention, incidental to sickness or injury, to the employees of such Contractor, of all sums which the Contractor agrees to pay for such services and all monies and sums which the Contractor:

1. May or shall have deducted from the wages of his employees for such services pursuant to the terms of Oregon Revised Statutes and any contract entered in pursuant thereto; or

2. Collected or deducted from the wages of his employees pursuant to any law, contract, or agreement for the purpose of providing or paying for such service; and

3. All employers working under the Contract are either employers that will comply with ORS 656.017 or employers that are exempt under ORS 656.126.

5.) They have not, and will not, discriminate against a Subcontractor in the awarding of a subcontract because the Subcontractor is a minority, women or emerging small business enterprise certified under ORS 200.055 as required by ORS 279A.110.

6.) No Contractor, Subcontractor or any firm, corporation, partnership or association in which the Contractor or Subcontractor has a financial interest who appears on the *List of Contractors Ineligible to Receive Public Works Contracts*, as established by the Bureau of Labor and Industries, will perform work under this Contract, as specified in ORS 279C.860.

7.) No Contractor, Subcontractor or any firm, corporation, partnership or association in which the Contractor or Subcontractor has a financial interest who appears on the Construction Contractor's Board *Not Qualified to Hold Public Contracts* list, will perform work under this Contract, as specified in ORS 701.227(4).

8.) The Contractor shall have a current, valid certificate of registration issued by the Construction Contractor's Board as defined in ORS 701.005(2) and/or a valid landscape contractor's license as defined in ORS 671.520(2) by the State Landscape Contractor's Board, as applicable, in place at the time the bid is presented.

9.) All Subcontractors shall have a current, valid certificate of registration issued by the Construction Contractor's Board as defined in ORS 701.005(2) and/or a valid landscape contractors license as defined in ORS 671.520(2) by the State Landscape Contractor's Board, as applicable in place prior to performing any work under the Contract.

10.) The Contractor shall function as an independent contractor for the purposes of this Contract and shall not be considered an employee of the City of Springfield for any purpose. The Contractor shall assume sole responsibility for any debts or liabilities that may be incurred by the Contractor in fulfilling the terms of this Contract and shall be solely responsible for the payment of all federal, state, and local taxes which may accrue because of this Contract.

Bid Addenda

All Addenda issued are considered to be part of the specifications of the Invitation to Bid and, as such, are as incorporated into the Contract as specified in Section 104.02 of the Standard Construction Specifications.

By signing below, I acknowledge the receipt of the following Addenda documents and certify that the specifications contained in each have been considered and incorporated into the bid as presented. All Addenda must be included with the bid submitted.

Addenda Number	Addenda Date

Declarations

The undersigned Bidder declares that the only persons or parties interested in the bid are those named herein, that this bid is, in all respects, fair and without fraud, that it is made without collusion with any official of the City, and that the bid is made without any connection or collusion with any person submitting another bid on this project.

I have read, fully understand, and agree that as Bidder I, and all Subcontractors, will comply with all of the terms and conditions of the contract for which this bid is presented. By signing below I attest that I am an officer or a duly authorized representative of the business listed below and that I possess the legal authority to submit this bid for consideration.

Bidder's Signature _____

Bidder's Name *(Please Print)* _____

Title _____

Business Name _____

Business Address _____

City _____ State _____ Zip _____

Phone Number _____ Cell Phone _____

E-mail Address _____ Fax Number _____

Date _____

The award of this Contract shall be made to the responsible Bidder with the lowest responsive bid.

CITY OF SPRINGFIELD

Special Provisions

for

P21067
10th and N Sewer Upgrade – Phase 2

Engineer's Seal

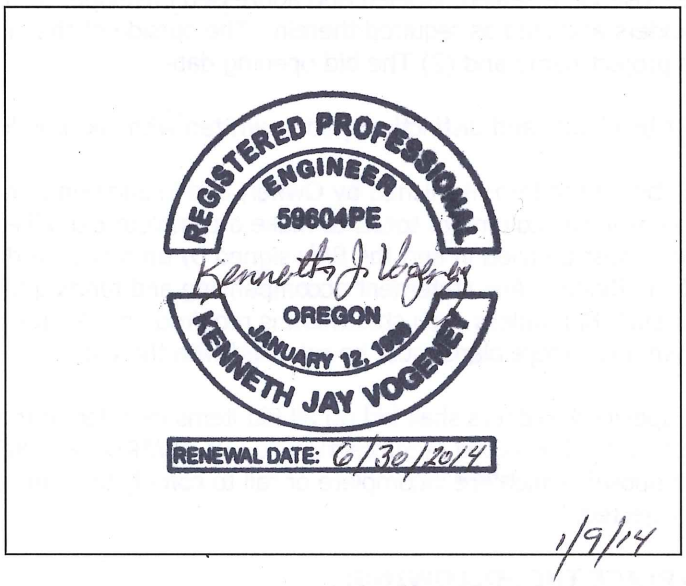

SPECIAL PROVISIONS

References to number of Divisions, Section, Sub-Section and the like shall mean the 1994 Edition of the Standard Construction Specifications, including all Addenda, Standard Drawings, and other Contractual Documents of the City of Springfield, Lane County, Oregon.

These Special Provisions supplement and amplify certain sections of the City of Springfield, Oregon, Standard Construction Specifications. The Standard Construction Specifications shall apply except as modified herein. These Special Provisions and additional technical specifications may contain occasional requirements not pertinent to the project. However, these specifications shall apply in all particulars insofar as they are applicable to this project.

SECTION A – General Requirements

P21067 10th and N Sewer Upgrade – Phase 2

A1. Applicable Standard Specifications

The 1994 Edition of the Standard Construction Specifications of the City of Springfield, Oregon, Standard Construction Specifications (including all revisions at date of bid opening), shall apply to this Invitation to Bid and construction contract except as they may be modified herein. All work shall be in accordance with the Standard Construction Specifications unless otherwise specified herein. In the case of discrepancy or contradiction, unless noted otherwise herein, the more restrictive provisions shall apply.

A2. Form of Proposal

REPLACE SECTION 102.02 "FORM OF PROPOSAL" OF THE STANDARD CONSTRUCTION SPECIFICATIONS:

"The Proposal and the proposal guarantee in the form of a bid bond, certified check, or cashier's check, shall be enclosed in a sealed, labeled and addressed envelope, as required in the Instructions to Bidders and filed as required therein. The outside of the envelope shall plainly identify: (1) The project name and (2) The bid opening date.

All Proposals must be clearly and distinctly typed or written with ink or indelible pencil.

All Proposals shall be on the form furnished by Owner, and in addition to necessary unit price items and total prices in the column of totals to make a complete Bid, all applicable blanks giving general information must be filled in and the Bids signed by an officer or duly authorized representative of the Bidder. Any statement accompanying and tending to qualify a Bid may cause rejection of such Bid, unless such statement is required, in a Proposal embracing alternate Bids. All bid documents except plans must be returned with the Bid.

Unless otherwise specified, Bidders shall bid on all Bid items included in the Proposal, and the low Bidder shall be determined as noted in Subsection 103.01 AWARD OF CONTRACT. Except as provided herein Proposals which are incomplete or fail to comply to all items required in the Proposal may be rejected."

INSERT IN ITS PLACE THE FOLLOWING:

"ALL BID DOCUMENTS, EXCEPT PLANS, MUST BE RETURNED WITH THE BID. This

includes all documents contained in the original bid book, whether they require the completion of information or not, and any addendum that may be issued pertaining to the bid in question. The only exceptions to this are any plans or drawings, which are not required to be submitted as a part of your Bid.

The Bid Submittal, Bid Bond, Certified Check, or Cashier's Check shall be enclosed in a sealed and labeled envelope. The outside of the envelope shall plainly identify: (1) The project name and project number and (2) The Bid opening date. All Bids must be clearly and distinctly typed or written with ink or indelible pencil. Unless otherwise specified, Bidders shall bid on all Bid items, and must include in their Bid prices the entire cost of each item of work set forth in the Bid.

Sealed Bids shall be addressed to and received at the Office of the Finance Director, City Hall, 225 Fifth St. Springfield, Oregon, 97477 at, or before, the time and date noted on the Invitation to Bidders, after which time the Bids will be publicly opened and read aloud.

All Bids shall be on the form furnished by the City, and in addition to necessary unit price items and total prices in the column of totals to make a complete Bid, all applicable blanks giving general information must be filled in and the Bids signed by an officer or duly authorized representative of the Bidder. The only exceptions to this requirement are the Performance Bond, Payment Bond, Statutory Public Works Bond and the Contract documents which are provided here as a reference. However, if you are awarded the Bid, you will be required to submit fully executed copies of these documents upon request. Any statement accompanying and tending to qualify a Bid may cause rejection of such Bid, unless such statement is required in a Bid embracing alternate Bids.

If, in the opinion of the City, the items or prices in any Bid appear unbalanced, incomplete, or fail to comply with all the terms required, the Bid may be rejected."

A3. Proposal Guaranty and Organization

REPLACE SECTION 102.05 "PROPOSAL GUARANTY AND ORGANIZATION" OF THE STANDARD CONSTRUCTION SPECIFICATIONS:

"Each Bid must be accompanied by a Bid Bond, cash or a certified or cashier's check upon a bank in good standing, payable to the Finance Director of the City of Springfield, Oregon, in an amount equal to at least 10% of the total amount of the bid. Such Proposal guaranty shall be forfeited and become the property of the City in case the Bidder shall fail or neglect to furnish a satisfactory Performance Bond and Payment Bond and to execute the Contract within 10 days (Saturday, Sunday and holidays excepted) after receiving said Contract from the City for execution. Bid bonds submitted shall be on the form provided by the City in the Bid document."

INSERT IN ITS PLACE THE FOLLOWING:

"As required by ORS 279C.365(4) each Bid shall be accompanied by a Bid Bond, cash, or a certified or cashier's check written upon a bank in good standing and in a form acceptable to the City, payable to the Finance Director of the City of Springfield, Oregon, in an amount equal to at least 10 percent of the total amount of the Bid. Bid Bonds shall be issued by a surety company registered to issue bonds in the State of Oregon, and utilizing a bond form acceptable to the City. The City will accept AIA Document A310-2010 Bid Bond (sample form enclosed). The Bid Bond may not be altered.

Such Bid Guarantee shall be forfeited and become the property of the City in case the Bidder shall fail or neglect to furnish a satisfactory Performance and/or Payment Bond issued by a viable bond company acceptable to the City as required by ORS 279C.380 and to execute the Contract within ten (10) days (Saturday, Sunday, and holidays excepted) after receiving Contract from the

City for execution. For information regarding Performance and Payment Bond requirements see City of Springfield Contract document, Section 5. City Bonding."

A4. Addenda to Contract Documents

REPLACE SECTION 102.08 "ADDENDA TO CONTRACT DOCUMENTS" OF THE STANDARD CONSTRUCTION SPECIFICATIONS:

"Any addenda issued by the Owner, which may include changes, corrections, additions, interpretations, or information, and issued 48 hours or more before the scheduled closing time for filing the Bids, Saturday, Sunday and legal holidays not included, shall be binding upon the Bidder. Owner shall supply copies of such addenda to all Contractors who have obtained copies of the Contract Documents for the purposes of bidding thereon. Failure of the Contractor to receive or obtain such addenda shall not excuse him from compliance therewith, if he is awarded the Contract."

INSERT IN ITS PLACE THE FOLLOWING:

"Any addenda issued by the City, which may include changes, corrections, additions, interpretations, or information issued 72 hours or more before the scheduled closing time for filing the Bids shall be binding upon the Bidder. Addenda will be posted to the City's website at www.springfield-or.gov/DPW/InvitationBid.htm. The Contractor should check the website frequently for new postings during the open quote period. The City shall make a reasonable effort to notify all individuals, firms, and corporations listed on the Plan Holders List and those individuals that attended the Pre-Bid Meeting and provided contact information on the sign-in sheet when addenda are issued. Failure of the Contractor to receive or obtain such addenda shall not excuse them from compliance, if they are awarded the Contract."

A5. Insurance

REPLACE SECTION 107.06 "INSURANCE" OF THE STANDARD CONSTRUCTION SPECIFICATIONS:

The Contractor shall provide and maintain general liability, auto liability, property, and workers' compensation insurance for life of this Contract.

General Liability Insurance
The Contractor shall maintain an ISO Commercial General Liability insurance policy (or an equivalent policy approved by Owner) with combined single limits of at least $1,000,000 per occurrence for bodily injury, personal injury, and property damage and an aggregate limit of a least $2,000,000. The policy shall include coverage for contractual liabilities.

Comprehensive Automobile Liability Insurance
The Contractor shall maintain an automobile liability insurance policy with combined single limits of at least $1,000,000 per occurrence for bodily injury, personal injury, and property damage.

Additional Insured Endorsement
The general and automobile insurance policies specified above shall include endorsements naming as an additional insured "the City of Springfield, its agents, employees and officials all while acting within their official capacity as such."

Property Insurance
Depending on the nature of the construction contemplated under this contract, Owner may require Contractor to provide property insurance. Refer to Special Provisions section of this Contract.

Workers' Compensation Insurance
Contractor, its subcontractors, if any, and all employers working under this agreement are subject employers under the Oregon Workers' Compensation Law and shall comply with ORS 656.017, which requires them to provide workers' compensation coverage for all their subject workers.

Contractor is responsible for maintaining workers' compensation insurance for his employees and assuring that his subcontractors, if any, also maintain workers' compensation insurance. Contractor shall defend, indemnify, and hold Owner harmless from any liability for any workers' compensation claims costs, fines, or costs whatsoever arising from Contractor's or his subcontractors' failure to comply with ORS 656.017.

Additional Policies and Special Coverages
Refer to the Special Provisions section of this Contract for additional coverages that may be required.

Certificates of Insurance
Certificates of insurance evidencing all policies required by this Contract shall be delivered to the Owner prior to the commencement of any work. All certificates shall include a 30-day notice of cancellation clause and required additional insured endorsements. The Owner has the right to reject any certificate for unacceptable coverage and/or companies.

INSERT IN ITS PLACE THE FOLLOWING:

"INSURANCE

All insurance shall be approved by the City as to terms, conditions and form prior to beginning work.

Public Liability and Property Damage

The Contractor shall maintain in force for the duration of this Contract a Commercial General Liability insurance policy written on an occurrence basis with limits not less than $2,000,000 per occurrence and $3,000,000 in the aggregate. The policy will be endorsed with a "per project" aggregate endorsement. Automobile Liability (owned, non-owned, and hired) insurance with limits not less than $1,000,000 per occurrence shall be maintained. The City, its employees, officials and agents will be named as Additional Insured's where operations are being conducted related to this Contract on the General and Automobile Liability policies as respects to work or services performed under this agreement to the extent that the death or bodily injury to persons or damage to property arises out of the fault of the Contractor or the fault of the Contractor's agents, representatives or subcontractors. The following statement will appear on the face of the certificate; "The City, its employees, officials and agents are all named as additional insured while acting in their capacity as such." The City's additional insured status for Products and Completed Operations hazards shall extend for at least one year beyond the acceptance of the project. This insurance shall be primary and shall be paid and applied first in its entirety prior to any application of insurance the City may carry on its own.

Workers' Compensation

The Contractor shall provide and maintain Workers' Compensation coverage with limits no less than $500,000 for it employees, officers, agents, or partners, as required by applicable Workers' Compensation laws. If the Contractor is exempt from this coverage a written statement, signed by the Contractor, explaining the reason for the exemption will be provided to the City prior to commencement of any work.

Course of Construction and/or Installation Floater

The Contractor shall maintain in full force for the duration of this contract an All Risk insurance policy approved by the City as to terms, conditions and form covering the replacement cost of the work during the course of construction. The policy shall include the interests of the City and Architect/Engineer, as applicable, and the first two layers of Subcontractors. The amount of insurance shall equal the completed value of the Contract. The City, at its option, may elect to supply this coverage.

Asbestos Abatement (only applicable to Asbestos Specific Contracts)

If applicable to this Contract, the Contractor shall maintain in full force a Commercial General Liability policy approved by the City as to terms, conditions and form that is Asbestos Specific with a minimum limit of $2,000,000 per occurrence and $3,000,000 in the aggregate written on a form that meets the following criteria as follows:

a. A full occurrence form, or
b. A limited occurrence form with at least a three-year (3) tail, or
c. A claims made form with a three-year (3) tail.

Pollution Liability Coverage (only applicable to Pollution Specific Contracts)

If applicable to this Contract, the Contractor shall maintain in full force a Commercial General Liability policy approved by the City as to terms, conditions and form that is Pollution Specific with a minimum limit of $2,000,000 per occurrence and $3,000,000 in the aggregate written on a form that meets the following criteria as follows:

a. A full occurrence form, or
b. A limited occurrence form with at least a three-year (3) tail, or
c. A claims made form with a three-year (3) tail.

Professional Liability Coverage (only applicable to Contracts if specified)

If Professional Liability insurance is required, the City must approve the terms, conditions and limits prior to commencement of any work.

Railroad Protective Liability Coverage

If work being performed under this Contract is near railroad tracks or a railroad right of way and the Railroad requires special insurance (for example: Railroad Protective Liability Coverage) Contractor will be responsible for meeting the Railroad insurance requirements before any work commences. Any insurance required to be purchased by the Railroad is in addition to the insurance required by the City.

Subcontractors

The Contractor shall require all Subcontractors to provide and maintain General Liability, Auto Liability and Workers' Compensation insurance and, as applicable, Professional, Asbestos and Pollution Liability with coverage's equivalent to those required of the General Contractor in this Contract. The Contractor shall require certificates of insurance from all Subcontractors as evidence of coverage.

Additional Insured Endorsement

All certificates of insurance, with the exception of Professional Liability and Railroad Protective Liability, must include an endorsement which lists the City of Springfield as a named additional insured. The following statement will appear on the face of the certificate; "The City, its employees, officials and agents are all named as additional insured while acting in their capacity as such."

Evidence of Coverage and Notice of Cancellation or Material Change in Coverage

Evidence of the required coverages issued by a company satisfactory of the City shall be provided to the City by way of a certificate of insurance before any work or services commence. A 30-day notice of cancellation or material change in coverage clause shall be included.

If the approved insurance company will not provide this 30 day notice, it shall be the responsibility of the Contractor to provide written notice to the City within two (2) days of the Contractor becoming aware that their coverage has been cancelled or materially changed. The Contractor shall e-mail notification directly to Bob Duey, Finance Director at rduey@springfield-or.gov. Regardless of the circumstances causing the Contractor's insurance coverage to cease or be modified, it is the Contractor's responsibility to notify the City as described above.

Failure to maintain the proper insurance or provide notice of cancellation or material change shall, at the City's option, be grounds for immediate termination of this Contract.

_____
(Contractor initials)

Equipment and Material

The Contractor shall be responsible for any loss, damage, or destruction of its own property, equipment, and materials used in conjunction with the work."

A6. Submission of Certified Payroll

REPLACE THE 2ND PARAGRAPH OF SECTION 109.07 OF THE STANDARD CONSTRUCTION SPECIFICATIONS:

Once before the first payment and each time the prevailing wage rates change, and once before final payment is made, Contractor shall supply and file with Owner a statement in writing under oath, in form prescribed by the State Labor Commission and which conforms with ORS Chapter 279, certifying the hourly rate of wages paid each classification of workman not exempt by statute who is employed upon such project and further certifying that no workman employed has been paid less than minimum prevailing wage rate. Each Subcontractor who performed work on the project during the period covered by the payment may be required to file with Owner a similar statement which covers its workmen.

INSERT IN ITS PLACE THE FOLLOWING:

It shall be the responsibility of the Contractor and any subcontractors to submit certified payroll statements to the City as to the wage rates paid to each worker as follows:

As specified in ORS 279C.845, the Contractor or the Contractor's surety and every Subcontractor or the Subcontractor's surety shall file certified statements with the public agency in writing, on a form prescribed by the Commissioner of the Bureau of Labor and Industries, certifying the hourly rate of wage paid each worker whom the Contractor or the Subcontractor has employed upon the public works, and further certifying that no worker employed upon the public works has been paid less than the prevailing rate of wage or less than the minimum hourly rate of wage specified

in the Contract. The certificate and certified statement shall be verified by the oath of the Contractor or the Contractor's surety or Subcontractor or the Subcontractor's surety that the Contractor or Subcontractor has read the certified statement and certificate and knows the contents thereof and that the same is true to the Contractor or Subcontractor's knowledge. Certified statements (also referred to as certified payroll reports) shall be submitted to the City no later than the 5th day of the following month for which the certified statement and certificate are being presented, regardless of whether any actual work is performed on the project or not. This information must be submitted to the City and also retained by the Contractor and Subcontractor(s) for three years.

Contracting agencies and general contractors are required to withhold 25% of amounts to Contractors if certified payrolls are not filed by the Contractor as required for work performed on projects subject to the prevailing wage rate law. Failure of Contractors to comply with the certified payroll filing requirements of the law, therefore, will result in a negative fiscal impact to those Contractors of up to 25% of their amount owed.

Each worker employed in the performance of this contract, either by the Contractor or Subcontractor or other person doing or contracting to do or contracting for the whole or any part of the work of the contract, must be paid not less than the specified minimum hourly rate of wage in accordance with ORS 279C.838 and 279C.840.

A7. Progress Payment

REPLACE THE 6TH PARAGRAPH OF SECTION 109.07 OF THE STANDARD CONSTRUCTION SPECIFICATIONS:

Progress payment will be made by the Owner on a monthly basis no later than the 20th day of the subsequent month of work performed, except that, additional days may be required when a payment is accompanied by one or more of the following: an extension of completion time, change order or extra bill. Payment may be made via use of checks or warrants at the option of the Owner for the amount of the approved estimate, less retainage.

INSERT IN ITS PLACE THE FOLLOWING:

"Progress payment will be made by the City on a monthly basis in the month subsequent to the work being performed, except that additional days may be required when the Contractor fails to submit complete and accurate certified payroll reports which are in compliance with ORS279C.845 when due, or a payment is accompanied by one or more of the following: an extension of completion time, change order or bill. If the Contractor fails to submit acceptable certified payroll reports when due, or one or more of the previously stated exceptions apply, the progress payment may be made up to fourteen (14) days after the date the certified payroll or other required information in question is received by the City.

The scheduled release of payment will depend upon the method of payment selected by the Contractor. If the Contractor elects to receive payment by check, payment will be released no later than the 20th day of the month. If the Contractor elects to receive payment by electronic Automated Clearing House (ACH) transfer, the funds will be transferred no later than the fourth Friday of the month. City will endeavor to honor Contractor's election to receive payment by ACH transfer, however, City reserves the right to make payment via use of check at the sole discretion of the City."

A8. Oregon Products

Contractor's attention is directed to the provisions of Oregon Law, ORS 279A.120 regarding the preference for products that have been manufactured or produced in Oregon. Contractor shall

use Oregon-produced or manufactured materials with respect to common building materials such as cement, sand, crushed rock, gravel, plaster, etc., and Oregon-manufactured products in all cases where price, fitness, availability and quality are otherwise equal.

A9. Salvage and Debris

Unless otherwise indicated on the drawings or in the specifications, all castings, pipe, equipment, demolition debris, fences, trees, shrubs, spoil or any other discarded material or equipment shall become the property of the Contractor and shall be salvaged or disposed of in a manner compliant with applicable Federal, State and local laws and regulations governing disposal of such waste products. No burning of debris or any other discarded material will be permitted. The Contractor shall perform any demolition for the completion of this project and shall salvage and recycle all construction and demolition debris as is feasible and cost effective, in accordance with ORS 279C.510.

A10. Brand Name or Equal Specification

Brand Name or Equal Specification means a specification that uses one or more manufacturers' names, makes, catalog numbers or similar identifying characteristics to describe the standard of quality, performance, functionality or other characteristics needed to meet the contracting agency's requirements. Such specification authorizes Contractors to offer goods or services that are equivalent or superior to those brands named or described in the specification.

END OF SECTION

SPECIAL PROVISIONS

SECTION B – General Conditions

P21067 10th and N Sewer Upgrade – Phase 2

B1. Scope of Work

All work shall be performed in accordance with the highest standard of practice in the industry and shall be furnished in conformance with all applicable codes, statutes or standards that apply to this work including, but not limited to, any applicable Federal, State or City of Springfield Codes, Standards and Ordinances.

The work to be performed under these specifications and drawings consists of the following:

Place 3,250 linear feet of new 24-inch sanitary sewer pipe and 15 new sanitary sewer manholes by open cut method. Place 140 linear feet of new 8-inch storm sewer pipe, 120 linear feet of new 10-inch storm sewer pipe, 10 linear feet of new 12-inch storm sewer pipe, and 10 linear feet of new 15-inch storm sewer by open-cut method. Remove and replace with new, 2 catch basins and 1 storm sewer manhole. Slurry seal and street repair on 2 blocks of street, and install 2 blocks of new pathway.

The above general outline of principal features of the work does not in any way limit the responsibility of the CONTRACTOR(s) to perform all work and furnish all equipment, labor and materials required by the specifications and drawings. The drawings and specifications shall be considered and used together. Anything appearing as a requirement of either shall be accepted as applicable to both even though not so stated therein or shown.

No attempt has been made in these specifications or drawings to segregate work covered by any trade or subcontract under one specification. Such segregation and establishment of subcontract limits will be solely a matter of specific agreement between the CONTRACTOR and its subcontractors and shall not be based upon any inclusion, segregation or arrangement in or of these specifications.

B2. Permits and Licenses

The CONTRACTOR shall comply with all permit conditions, provisions and limitations. Such conditions and requirements are hereby made a part of these specifications, as fully and completely as though the same were fully set forth herein. The CONTRACTOR shall examine the permit(s) granted by any City, County and State agencies. Failure to do so will not relieve the CONTRACTOR from compliance with the requirements stated therein.

A. The City has obtained a DEQ 1200-CA NPDES permit for the work. A copy of that permit is available for viewing at the City of Springfield. CONTRACTOR shall accommodate all special inspections required thereof, all at no additional expense to the OWNER beyond prices as bid.

B3. DEQ and EPA Requirements

It is the Policy of the City of Springfield that there will be full compliance with the City's wastewater NPDES permit and that there shall be no spillage of raw sewage during the construction phase of this project. In the event that this Policy is inadvertently violated, the CONTRACTOR shall immediately notify the Project Inspector of the spill. Notification is the

process that ensures that the appropriate entities are informed of a release of raw sewage. If the CONTRACTOR is unable to contact the Inspector, the CONTRACTOR shall notify the Collection System Compliance Officer or his Designee.

City Inspector:	Gene Enos, 541-726-6026
Collection System Compliance Officer:	Brian Conlon, 541-726-3753
Designee:	Mike Risley, 541-726-3615

The representative of the City of Springfield shall report the sewage spill within 24 hours to the Oregon **Department of Environmental Quality** and any other appropriate entities. A spill contained in an excavation is still considered a spill and must be reported.

Failure by the CONTRACTOR to report a spill to the appropriate City representative will result in liquidated damages in the amount of $500.00 per incident plus an amount sufficient to reimburse the City for any civil and administrative penalties paid by the City as a result of the CONTRACTOR's failure to report as described in the Bid Submittal, Terms and Declarations document included in this contract. The CONTRACTOR is to take every reasonable measure to avoid any spills during construction.

B4. Prevention, Containment and Clean-up of Sanitary Sewer Spills

The CONTRACTOR shall have on site a sewage spill kit and provide to the Engineer a written **Prevention, Containment and Clean-up Plan** for spilled sewage at the **Pre-Construction Meeting**. The **Plan** shall describe how the Contractor will prevent spillage during construction, the equipment and materials on site, and the methods to be used to contain and clean up spilled sewage. Approval of the **Prevention, Containment and Clean-up Plan** does not relieve the CONTRACTOR of responsibility for preventing spills or properly containing and cleaning up any spills.

B5. Site Investigation and Physical Data

The CONTRACTOR acknowledges that it is satisfied as to the nature and location of the work and the general and local conditions, including but not limited to those bearing upon transportation, disposal, handling and storage of materials, availability of water, roads, groundwater, access to the sites, coordination with other contractors, and conflicts with pipelines, structures and other contractors. Information and data furnished or referred to herein is provided for information only. Any failure by the CONTRACTOR to become acquainted with the available information and existing conditions will not be a basis for relief from successfully performing the work and will not constitute justification for additional compensation.

The CONTRACTOR shall verify the locations and elevations of existing pipelines, structures, grades and utilities, prior to construction. The OWNER assumes no responsibility for any conclusions or interpretations made by the CONTRACTOR on the basis of the information made available and will bear no liability or costs with location conflicts.

B6. Interferences, Obstructions and Sewer Crossings

At certain places, power, light and telephone poles may interfere with excavation and the operation of the CONTRACTOR's equipment. Necessary arrangements shall be made with utility companies for moving or maintaining such poles. The utility company affected by any such interference shall be notified by the CONTRACTOR within two working days thereof so that the necessary moving or proper care of poles and appurtenances may have appropriate attention.

All utility company costs resulting from stabilization of utility poles will be paid by the City. Also see section B23 for more information.

B7. Work Hour Limitations

All work shall be conducted between the hours of 7:00 a.m. and 6:00 p.m. on weekdays. Requests for variations in work hours shall be made in writing and shall be submitted to the ENGINEER for approval by the City Council before any after hour work can occur. Work on Saturdays and Sundays must be approved by the ENGINEER.

See also Section I, Traffic Control, of these Special Provisions and Additional Technical Specifications for additional restrictions on work hours.

B8. Record Drawings

CONTRACTOR shall maintain at the site one set of specifications, full size drawings, shop drawings, equipment drawings and supplemental drawings which shall be corrected as the work progresses to show all changes made. Drawings shall be available for inspection by the ENGINEER. Upon completion of the contract and prior to final payment, specifications and drawings shall be turned over to the ENGINEER.

B9. Competent Person Designation

CONTRACTOR shall designate a qualified and experienced "competent person" at the site whose duties and responsibilities shall include enforcement of Oregon - OSHA regulations regarding excavations, the prevention of accidents, and the maintenance and supervision of construction site safety precautions and programs.

See also Section G, AC Pipe Removal, of these Special Provisions and Additional Technical Specifications for Competent Person Designation as it relates to asbestos cement pipe removal.

B10. Vehicle Parking

The vehicles of the CONTRACTOR's and subcontractors' employees shall be parked in accordance with local parking ordinances.

B11. Street Cleanup

Refer to Erosion Control Notes on plan sheets.

B12. Reconnection of Private Sewer Laterals

All private sewer laterals temporarily disconnected for sewer work shall be reconnected by 6:00 PM on the same day. CONTRACTOR will document size and types of private sewer lateral connected to by address and provide them to project ENGINEER.

B13. Survey Services

The City of Springfield shall provide survey services as required and as described in Section 105.09 and 105.10 of the Standard Construction Specifications.

All surveying shall be manhole centerline to manhole centerline, including combined flow manholes, unless otherwise requested in writing by CONTRACTOR and any cost to adjust pipe in the field is the responsibility of the CONTRACTOR.

B14. Order of Work

CONTRACTOR shall schedule work such that the flow control manhole, located south of the intersection of 13th Street and Centennial Boulevard, as shown on sheets 14A – 14C, will be installed prior to, or concurrently with, the start of the rest of the work on this project.

CONTRACTOR shall schedule work such that any and all work and restoration within the right of way is complete by October 15, 2014, including curb and gutter, sidewalk, asphalt, driveways, etc.

B15. On-Site Sanitary Facilities

The CONTRACTOR shall provide and maintain sanitary facilities for its employees and its subcontractors' employees that will comply with the regulations of the local and State Departments of Health and as directed by the ENGINEER.

B16. Private Roads and Driveways

See City of Springfield's Standard Construction Specifications section 107.13

B17. Erosion and Sedimentation Control

Temporary construction site erosion control measures shall be designed and constructed in accordance with the City's NPDES 1200-CA Permit, copy available from the City. Work shall not commence until the approved erosion and sedimentation control measures are in place. Refer to Erosion and Sediment Control notes on plan sheets.

Dewatering of trenches and other excavation shall be managed in accordance with Section 401.3.04 of the Standard Construction Specifications and the Erosion Control Standard Notes on the Plan Sheets.

B18. Backfill and Compaction Testing

Refer to City of Springfield's Standard Construction Specifications section 405.3 for trench compaction. **NOTE: No native backfill shall be used during the construction of this project.**

Compaction for base rock in street reconstruction is covered in section 305.3.06.

B19. Limits of the Work and Storage of Spoils

The limits of the site which may be used for construction, storage, materials handling, parking of vehicles and other operations related to the project include the public rights-of-way subject to permission of the public owner of that right-of-way. The limits of work may also include the permanent easements on private property. Permanent easements are a minimum of 10 feet wide, centered on the pipeline. Such easements exist also when the pipeline lies less than seven feet from private property. The CONTRACTOR is to work within the limits of the permanent easements and public rights-of-way.

All easement areas may be accessed from public rights-of-way; however, if the CONTRACTOR desires to access easements through private property it is the CONTRACTOR'S responsibility to coordinate such access with the property owner and to complete associated surface restoration to the satisfaction of the property owner. Prior to final payment, the CONTRACTOR shall obtain a release from the property owner on the Homeowner Approval and Release Form included in the Supplemental Information Section confirming that the installation and site restoration work is

satisfactory to the property owner. All releases shall be submitted to the ENGINEER. See sections C, D, and H of these specifications for more details.

The CONTRACTOR shall ascertain to what extent the width, status and special conditions attached to easements may have on its operations, and all costs resulting there from shall be included and absorbed in the unit prices of the CONTRACTOR's bid. CONTRACTOR shall coordinate with private property owners and businesses as required. Landscaping, surface restoration and fence restoration work shall commence within 72 hours following piping installation and other construction work in that area. Temporary fencing shall be provided continuously until such private fencing is properly restored.

Temporary construction easements have been granted for this project at 967 Olympic Street and 964 N Street. The temporary construction easements are for the eastern 7 feet of the lots. The temporary easements shall be restored to original grades with erosion control measures in place by the CONTRACTOR prior to September 15, 2014.

A second set of temporary construction easements have been granted for this project at 1284 Parker Street and 1309 Centennial Boulevard. The temporary construction easement for 1284 Parker Street is the eastern 8 feet of the lot to be used by the CONTRACTOR for access to the manhole. A portion of 1309 Centennial Boulevard has a temporary construction easement in place for SUB Electric to access and hold the Utility pole located at the SW corner of the lot.

The CONTRACTOR shall have use of the existing undeveloped 13th Street right of way as a temporary staging area between L Street and N Street, during construction. The CONTRACTOR shall maintain vehicular access for the property at 1280 ½ L Street.

The CONTRACTOR shall take notice and notify the property owners of 1309 Centennial Boulevard at least 2 days prior to entering the property. The owners have stated they have 2 dogs, one being a pit bull, and require time to secure the dogs. There also is an existing cleanout within the Temporary Construction Easement approximately 3 feet north of the southern fence line to be protected, or if damaged, shall be replaced at no cost to the City.

B20. Sewage Diversion and By-Pass Pumping

Refer to Section F, Sewage Diversion and By-pass Pumping, of these Special Provisions and Additional Technical Specifications.

B21. Field Changes, Lateral Connection Locations

Changes to lateral connection locations may be allowed during the course of work in order to avoid interference with certain unforeseen obstructions. Such changes may be allowed on a case by case basis as approved by the ENGINEER. The CONTRACTOR shall locate existing laterals in the field to be reconnected, and propose new main connection locations to the ENGINEER for approval. The ENGINEER will endeavor to make prompt decisions on such matters. CONTRACTOR shall anticipate a minimum of 72 hours for any decision requiring significant change.

B22. Emergency Maintenance Supervisor

The CONTRACTOR shall submit to the ENGINEER the names, addresses and telephone numbers of at least two employees responsible for performing emergency maintenance and repairs when the CONTRACTOR is not working. These employees shall be designated, in writing by the CONTRACTOR, to act as its representatives and shall have full authority to act on its behalf. At least one of the designated employees shall be available for a telephone call any time an emergency arises.

B23. Utility Properties and Service

In areas where the CONTRACTOR's operations are adjacent to or near a utility and such operations may cause damage which might result in significant expense, loss and inconvenience, the operations shall be suspended until all arrangements necessary for the protection thereof have been made by the CONTRACTOR.

The CONTRACTOR shall notify all utility offices which may be affected by the construction operation at least 48 hours in advance. Before exposing any utility, the utility having jurisdiction shall grant permission and may oversee the operation. Should service of any utility be interrupted due to the CONTRACTOR's operation, the proper authority shall be notified immediately. It is of the utmost importance that the CONTRACTOR cooperates with the said authority in restoring the service as promptly as possible. Any costs shall be borne by the CONTRACTOR.

In the event that SUB Electric is needed to support their power poles during construction, all costs shall be borne by the CITY. The CONTRACTOR shall notify SUB Electric two working days before the poles must be held.

Utilities which may be impacted include the following:

Electric	Springfield Utility Board (SUB)
Water	Springfield Utility Board (SUB)
Telephone	Century Link
Gas	Northwest Natural
Cable	Comcast
Sanitary Sewer	City of Springfield
Storm Sewer	City of Springfield
Street Lighting	City of Springfield
Traffic Signals	City of Springfield
Highways	ODOT
Fiber Optics	Sprint

B24. Coordination with Collection System Customers

The City of Springfield will assume responsibility for initial notifications to and coordination with all sewage collection system customers whose building sewer laterals will be out of service during construction. It is the CONTRACTOR's responsibility to, no less than 24 hours prior to interruption of service, conduct notifications to customers in writing via door hangers or U.S. mail.

B25. Submittals

The CONTRACTOR shall provide shop drawings, schedules and such other drawings as may be necessary for the prosecution of the work in the shop and in the field as required by the contract documents or ENGINEER's instruction.

Within 14 days after award of the contract, the CONTRACTOR shall submit to the ENGINEER a proposed list of manufacturers, suppliers, and subcontractors and a schedule of specific target dates for the submission and return of shop drawings required by the contract documents. Said list and schedule shall be updated and re-submitted when requested by the ENGINEER. All shop drawings for interrelated items shall be scheduled for submission at the same time. Not less than 1 week shall be allocated to each submittal for processing by the ENGINEER. At least six (6) copies of all submittals shall be provided to the ENGINEER. Four (4) copies of all submittals will be kept by the ENGINEER. If the CONTRACTOR requests that more than two (2) copies be returned, then the CONTRACTOR shall submit the appropriate quantity of submittals.

The ENGINEER will review shop drawings to determine compliance with the design concept of the project and return them to the CONTRACTOR within the period established in the shop drawings schedule. The ENGINEER may hold shop drawings in cases where partial submission cannot be reviewed until the complete submission has been received or where shop drawings cannot be reviewed until correlated items affected by them have been received. When such shop drawings are held, the ENGINEER will advise the CONTRACTOR in writing that the shop drawing submitted will not be reviewed until shop drawings for all related items have been received.

The CONTRACTOR shall submit to the ENGINEER, for review, six (6) copies each of such shop drawings, electrical diagrams and catalog information for fabricated items and manufactured items required for construction. The ENGINEER will review the submitted data and shop drawings, and will make notations thereon indicating "No Exception Taken", "Make Corrections Noted", "Rejected", "Revise and Resubmit", or "Submit Specified Item". The ENGINEER will then return two (2) copies of the submitted data and shop drawings to the CONTRACTOR. The ENGINEER's review of submittals and shop drawings is not a check of any dimension or quantity, and will not relieve the CONTRACTOR from responsibility for errors of any sort in the submittals and shop drawings.

When shop drawings and/or submittals are required to be revised or corrected and resubmitted, the CONTRACTOR shall make such revisions and/or corrections and resubmit those items or other materials in the same manner as specified above.

Submitted data shall be sufficient in detail for determination of compliance with the Contract Documents. Color samples for all items for which colors are to be selected shall be submitted at the same time. No equipment or material for which listings, drawings, or descriptive material is required shall be installed until the CONTRACTOR has received review from the ENGINEER.

Regardless of corrections made in or review given to the drawings by the ENGINEER, the CONTRACTOR shall be responsible for the accuracy of such drawings and for their conformity to the drawings and specifications. The CONTRACTOR shall check all submittals before submitting them to the ENGINEER and shall stamp its approval on all copies of the shop drawing documents. Any submittals received by the ENGINEER which do not bear the CONTRACTOR's approval shall be returned without review. If more than two (2) submissions are required to meet the project specifications, the cost of reviewing these additional submissions may be charged directly against the CONTRACTOR and the OWNER may withhold the funds necessary to cover these costs.

Materials and equipment shall be ordered a sufficient time in advance to allow time for reviews, and shall be available on the job when needed. Last minute review will not be given for inferior substitutes for material or equipment.

Required submittals include items listed below. List is provided for CONTRACTOR convenience only and may not be complete in all respects. CONTRACTOR shall provide all submittals required, whether or not specifically listed herein.

A. Schedules – See section 108.01 of the Standard Specifications.

B. Shop Drawings -- The CONTRACTOR shall provide shop drawings, schedules and such other drawings as may be necessary for the prosecution of the work in the shop and in the field as required by the contract documents or ENGINEER's instruction. Shop drawings will be required for the flow control manholes.

C. Erosion Control Plan

D. Materials Lists

E. CONTRACTOR Contact Persons

F. Material Safety Data Sheet

G. Traffic Control Plan

H Miscellaneous Materials and Other Submittals (See Specifications)

I. Spill Containment and Cleanup Plan

J. Sanitary Sewer By-Pass Pumping and Diversion Plan.

B26. Noise Limitations

All applicable City, County ordinances and State regulations shall be complied with.

END OF SECTION

SPECIAL PROVISIONS

SECTION C – Measurement and Payment

P21067 10th and N Sewer Upgrade – Phase 2

C1. General

Measurement and payment will be on a unit price basis in accordance with the prices set forth in the bid submittal for individual work items. Where work is required but does not appear as a separate item in the bid, the cost for that work shall be included and absorbed in the unit prices named in the bid. CONTRACTOR shall make a careful assessment when preparing the bid.

Construction Bid Item No.	Description

0057. Imported Topsoil Restoration: Payment for Imported Topsoil Restoration is on a Lump Sum (L.S.) basis. This shall include: ripping the ground 6-8" to loosen the soils, adding 1" of Natures Best planting mix, or approved equal, into the top 3-4" of soil by rototilling it in, adding seed (see Bid Item 0169 for seeding) and fertilizing the area.

0060. Mobilization, Demobilization, Bonding and Insurance: Payment for Mobilization, Demobilization, Bonding and Insurance is on a Lump Sum (L.S.) basis. See Section 201 of the City of Springfield Standard Construction Specifications.

0063. Clearing and Grubbing: Payment for Clearing and Grubbing, including cutting, removal, transport and disposal of trees of less than 1 foot diameter, stumps, tree limbs, plants, shrubs, vines, planters shall be on a Lump Sum (L.S.) basis, complete. Refer to Section 203 of the Standard Specifications.

0064. Erosion Control: Payment for Erosion Control is on a Lump Sum (L.S.) basis, except for Construction Entrance which is paid for under item 0065. Refer to Erosion Control Standard Notes on the Plan Sheets.

0065. Construction Entrance: Construction entrances to prevent tracking in the street will be constructed as per the detail in the Contract Plans, in the easement, and at locations as directed by the ENGINEER. Measurement and payment for Contract Entrances is on a per EACH basis.

0066. Lawn and Landscaping Restoration: Payment for lawn and landscaping restoration, to the satisfaction of the ENGINEER, the City and the property owner will be paid for on a Lump Sum (L.S.) basis. Payment will be made for this item for work associated with new gravity sewer pipes, service laterals, manholes, and appurtenances as shown on the plans and included in the specifications. The pay area for surface restoration will be those areas disturbed within the limits of the easements and public rights-of-way. The work associated with this item consists of lawn and landscaping restoration including restoring irrigation systems, lawns, shrubs, bushes, trees, gardens, hedges, bark dust, ornamental vegetation, flower beds, and landscaping structures such as raised beds, within the authorized work areas. Lawn and landscaping restoration outside of the above described pay area will be considered incidental to the work. Refer to Standard Drawing 4-16 for further detail. **NOTE: No native material will be used as backfill during this project.** Lawn seed shall be commercial lawn seed appropriate for this area and approved by the ENGINEER. All work performed will conform to the requirements set forth in ORS 279C.510.

0073. Excavation Below Grade: Payment for Excavation Below Grade shall be per Cubic Yard (C.Y.) for the removal of unsuitable sub-grade material and replacement as per Section 301.3.11 of the Standard Specifications.

0075. Common Excavation: Payment for Common Excavation, including ADA ramps and the valley gutter, shall be by Cubic Yard (C.Y.).

0086. Aggregate Base 3/4 - 0: Payment for Aggregate Base rock shall be on a per TON basis. Payment shall be based on the quantities on load tickets collected by the Inspector.

0096. Crack Seal: Payment for Crack Seal shall be on a per Linear Foot (L.F.) basis. Crack seal product shall be "Beram Direct Fire – Crack and Joint Sealant" or approved equal. Material approvals for alternate crack seal shall be made by the City of Springfield Operations Division, Greg Ferschweiler, 541-726-3613. See Section K of the Special Provisions for more information.

0099. Slurry Seal: Payment for slurry seal shall be by on a per Square Yard (S.Y.) basis. See Special Provisions Section J for more information.

0103. Asphalt Pavement Restoration: Payment for Asphalt Pavement Restoration shall be on a per TON basis. This item is to be used for final restoration of pavement at trench excavations. Furnishing and installing **temporary** paving or its maintenance during construction is considered to be incidental work and no additional payment will be made. Saw cutting shall be paid for under bid item 0197. All other work incidental to trench surfacing replacement shall be included in bid price stated. No additional payment will be made for surface damaged or otherwise removed outside pay width limit. Refer to City of Springfield Standard Drawing 4-16 T – A for paved streets, and T- C for unpaved streets and alleys for further detail.

All asphalt pavement restoration under this bid item is Level 3, Class C mix.

0104. A.C. In Place Class C: Payment for Asphalt Concrete in Place shall be by the TON. This item is to be used for all areas outside of trench patching and shall be Level 3, Class C mix. This bid item includes AC pathways.

0117. Remove and Replace Guardrails: Payment for Removal and Replacement of Guardrails shall be Lump Sum (L.S.) and shall include removal of all existing and replacement with new guardrails. See City of Springfield Standard Detail 5-19.

0123. Concrete Valley Gutter: Measurement and payment for Concrete Valley Gutter shall be by the Square Yard (S.Y.). This item shall be for the replacement of the existing valley gutter at 10th and N Street.

0132. Concrete Curb and Gutters: Measurement and payment for Concrete Curb and Gutters shall be by Linear Foot (L.F.) and shall include rebar dowelling at the connection to existing curb and gutter. Dowelling shall be two, 12-inch long #4 deformed bars drilled 6 inches into the existing gutter pan and secured with epoxy, and shall be incidental to the curb and gutter work.

0137. 4 inch Concrete Sidewalk: This item is to be used to replace sidewalks and miscellaneous concrete 4 inch thick including base rock. See Standard Drawing 3-12 for City sidewalks. Measurement and payment is by the Square Foot (S.F.).

0141. Handicap Ramps: Handicap ramps shall be paid per Square Foot (S.F.) including ramps, side curbs on ramps, required landings, and ramped walk up to standard sidewalk.

0142. Truncated Domes for Handicap Ramps: Truncated domes on handicap ramps shall be paid per EACH for truncated dome panels 2-feet by 5-feet in size.

0153. Chain Link Fence: Payment will be on Linear Foot (L.F.) basis for the total length of new chain link fence installed, this item includes gates. Refer to Section 315 of the Standard Specifications.

0155. Wood Fence: Payment will be on Linear Foot (L.F.) basis for the total length of new wood fence installed, this item includes gates. Refer to Section 315 of the Standard Specifications.

0160. Bollards: Payment will be on EACH basis for installation of new removable locking bollards and will include: excavation and installation of a foundation, installation of a new removable bollard with approved Public Works Lock, and all appurtenances. See ODOT Standard Drawing DET1710.

0169. Seeding: Payment will be on a Lump Sum (L.S.) basis for seeding. Bid item 0169 covers all seeding for the block areas on 13th Street between N Street and L Street. This seeding will occur after all work is complete in this area, including grading. See bid item 0866 for grading of this area. CONTRACTOR to use a Tall Fescue Grass Seed.

0197. Saw-Cutting Existing Surface: Measurement and payment for saw cutting existing surfacing shall include the total sawed length of the initial trench width cuts and the total sawed length of the subsequent tee-cuts as shown on the standard trench detail. Payment for saw cutting existing surfacing, which includes AC and concrete surfaces is by the Linear Foot (L.F.). Refer to Standard Drawing 4-16.

0257. 8-inch ASTM D3034 SDR 35 Sanitary Sewer: Payment for furnishing and installing 8-inch PVC sanitary sewer main line will be on a Linear Foot (L.F.) basis for the total length of the new sanitary sewer main installed, complete and will include: excavation of a trench, removal of any AC pipe pursuant to Section G, installation of 8-inch sewer line, trench backfill using granular backfill, connecting couplings and fittings (unless payment is provided for in other items) testing, handling of sewage during construction, including sewerage diversion and by-pass pumping pursuant to Section F, disposal of the excavated material and all other incidental work and materials. Surface restoration will be paid for under bid item 0103. PVC pipe will consist of 8-inch ASTM D3034 SDR 35 for open cut locations. CDF backfill, where required, will be paid under Item 0861.

NOTE: This item is subject to material price escalation/de-escalation, see C.2 of this section.

0260. 15-inch ASTM D3034 SDR 35 Sanitary Sewer: Payment for furnishing and installing 15-inch PVC sanitary sewer main line will be on a Linear Foot (L.F.) basis for the total length of the new sanitary sewer main installed, complete and will include: excavation of a trench, removal of any AC pipe pursuant to Section G installation of 15-inch sewer line, trench backfill using granular backfill, connecting couplings and fittings (unless payment is provided for in other items) testing, handling of sewage during construction, including sewerage diversion and by-pass pumping pursuant to Section F, disposal of the excavated material and all other incidental work and materials. Surface restoration will be paid for under bid item 0103. PVC pipe will consist of 15-inch ASTM D3034 SDR 35 for open cut locations. CDF backfill, where required, will be paid under Item 0861.

NOTE: This item is subject to material price escalation/de-escalation, see C.2 of this section.

0261. 18-inch ASTM F679 Sanitary Sewer: Payment for furnishing and installing 18-inch PVC sanitary sewer main line will be on a Linear Foot (L.F.) basis for the total length of the new sanitary sewer

main installed, complete and will include: excavation of a trench, removal of any AC pipe pursuant to Section G, installation of 18-inch sewer line, trench backfill using granular backfill, connecting couplings and fittings (unless payment is provided for in other items) testing, handling of sewage during construction, including sewerage diversion and by-pass pumping pursuant to Section F, disposal of the excavated material and all other incidental work and materials. Surface restoration will be paid for under bid item 0103. PVC pipe will consist of 18-inch ASTM F679 for open cut locations. The pay length will be the length of new pipe installed as measured from center of manhole to center of manhole. CDF backfill, where required, will be paid under Item 0861.

NOTE: This item is subject to material price escalation/de-escalation, see C.2 of this section.

0263. 24-inch ASTM F679 Sanitary Sewer: Payment for furnishing and installing 24-inch PVC sanitary sewer main line will be on a Linear Foot (L.F.) basis for the total length of the new sanitary sewer main installed, complete and will include: excavation of a trench, removal of any AC pipe pursuant to Section G, installation of 24-inch sewer line, trench backfill using granular backfill, connecting couplings and fittings (unless payment is provided for in other items) testing, handling of sewage during construction, including sewerage diversion and by-pass pumping pursuant to Section F, disposal of the excavated material and all other incidental work and materials. Surface restoration will be paid for under bid item 0103. PVC pipe will consist of 24-inch ASTM F679 for open cut locations. The pay length will be the length of new pipe installed as measured from center of manhole to center of manhole. CDF backfill, where required, will be paid under Item 0861.

NOTE: This item is subject to material price escalation/de-escalation, see C.2 of this section.

0277. New 48-inch Sanitary Sewer Manhole: Payment for furnishing and installing manholes shall be per EACH.

0277a. Remove and Replace 48-inch Storm Sewer Manhole: Payment for the removal, furnishing and installation of a new manhole shall be per EACH. The existing storm sewer manhole shall be removed to accommodate the new sanitary sewer lines and manhole. The new storm sewer manhole shall be installed in the location shown in the plans.

0278. New 60-inch Sanitary Sewer Manhole: Payment for furnishing and installing 60-inch diameter manhole shall be per EACH.

0279. New 72-inch Sanitary Sewer Manhole with Stop Logs: Payment for furnishing and installing 72-inch diameter manholes with stop logs shall be per EACH.

0280. New 84-inch Sanitary Sewer Manhole: Payment for furnishing and installing 84-inch diameter manholes shall be per EACH.

0281. Traffic-Rated Manhole Collar: Payment for Traffic-Rated Manhole Collar as shown on the Plan Sheets shall be per EACH. Traffic-Rated Manhole Collars shall be installed on all manholes located within areas of asphalt or concrete streets.

0296. 8-inch ASTM D3034 SDR 35 Storm Sewer: Measurement and payment for 8-inch storm sewer shall be by Linear Foot (L.F.) and shall include: excavation of a trench and removal of the existing storm sewer where it conflicts with trenching for sanitary sewer, removal of any AC pipe pursuant to Section G, installation of new 8-inch storm sewer line as shown in plans, trench backfill using granular backfill, connecting couplings and fittings (unless payment is provided for

in other items), video inspection and handling of storm water. CDF backfill, where required, will be paid under Item 0861.

NOTE: This item is subject to material price escalation/de-escalation, see C.2 of this section.

297. 10-inch ASTM D3034 SDR 35 Storm Sewer: Measurement and payment for 10-inch storm sewer shall be by Linear Foot (L.F.) and shall include: excavation of a trench and removal of the existing storm sewer where it conflicts with trenching for sanitary sewer, removal of any AC pipe pursuant to Section G, installation of new 10-inch storm sewer line as shown in plans, trench backfill using granular backfill, connecting couplings and fittings (unless payment is provided for in other items), video inspection and handling of storm water. CDF backfill, where required, will be paid under Item 0861.

NOTE: This item is subject to material price escalation/de-escalation, see C.2 of this section.

0298. 12-inch ASTM D3034 SDR 35 Storm Sewer: Measurement and payment for 12-inch storm sewer shall be by Linear Foot (L.F.) and shall include: excavation of a trench and removal of the existing storm sewer where it conflicts with trenching for sanitary sewer, removal of any AC pipe pursuant to Section G, installation of new 12-inch storm sewer line as shown in plans, trench backfill using granular backfill, connecting couplings and fittings (unless payment is provided for in other items), video inspection and handling of storm water. CDF backfill, where required, will be paid under Item 0861.

NOTE: This item is subject to material price escalation/de-escalation, see C.2 of this section.

NOTE: Payment for AC Pipe removal will be paid for per Liner Foot (L.F.) under this bid item. See Special Provision G, AC Pipe Removal, for more information.

0299. 15-inch ASTM D3034 SDR 35 Storm Sewer: Measurement and payment for 15-inch storm sewer shall be by Linear Foot (L.F.) and shall include: excavation of a trench and removal of the existing storm sewer where it conflicts with trenching for sanitary sewer, removal of any AC pipe pursuant to Section G, installation of 15-inch storm sewer line, trench backfill using granular backfill, connecting couplings and fittings (unless payment is provided for in other items), video inspection, and handling of storm water. CDF backfill, where required, will be paid under Item 0861.

NOTE: This item is subject to material price escalation/de-escalation, see C.2 of this section.

0331. Remove and Replace Catch Basin: Payment for the removal, furnishing and installation of a new catch basin shall be per EACH. The existing storm sewer catch basins shall be removed to accommodate the new sanitary sewer lines and manhole. The new storm sewer catch basins shall be installed in the location shown in the plans.

0861. Controlled Density Fill: CDF shall be measured and paid by the Cubic Yard (C.Y.) for manholes and other excavations in paved streets. CDF is required for the top two feet of backfill below the paved surface. Refer to Section 405.2.04 of the Standard Specifications. Payment shall be based on the quantities on load tickets collected by the Inspector.

0862. Private Property Documentation: Payment for photographic documentation of pre-construction and post-construction conditions on all private properties affected by CONTRACTOR's work or

operations and obtaining approvals and releases from all private property owners shall be on a Lump Sum (L.S.) basis, complete.

0866. Grading: Payment for grading will be on a Lump Sum (L.S.) basis. Bid item 0866 is for grading of the block areas on 13th Street between N Street and L Street. This shall include preparation work for the AC pathway. Payment for the base rock and asphalt for the AC pathway shall be under bid items 0086 and 0104.

Traffic Bid
Item No. **Description**

0061. Temporary Traffic Control: Payment for temporary traffic control, maintenance and protection including all coordination, materials, labor and equipment, as required, will be on a Lump Sum (L.S.) basis, complete. Refer to Section 202 of the Standard Specifications and to Section I, Traffic Control, of these Special Provisions and Additional Technical Specifications.

0228. Plastic Markings: Payment for plastic markings shall be for all labor, equipment and materials to replace all striping affected by construction activities with new thermoplastic striping, and shall be paid for by Lump Sum (L.S.) basis, complete. **Also included in this pay item are all additional new plastic markings.** Refer to Section E, Pavement and Surface Restoration, of these Special Provisions and Additional Technical Specifications. Payment for Bicycle Pavement Markings shall be under bid item 0236.

0236. Plastic Bicycle Pavement Markings: Payment for Plastic Bicycle Pavement Markings shall be for all labor, equipment and materials to place new thermoplastic bicycle pavement markings with an associated directional arrow, and shall be paid for on a per EACH basis, complete. Refer to Section E, Pavement and Surface Restoration, of these Special Provisions and Additional Technical Specifications.

0246. Install Street Signs: Payment for street signs will be per EACH and will include removal of sign, as needed, and installation of sign, sign base, pole and all appurtenances as per Standard Drawing 5-18.

C.2 Material Price Escalation/De-Escalation

Certain ay Items in this project will be subject to the requirements of material price escalation/de-escalation clause as follows:

A PVC Escalation/De-Escalation Clause will be in effect during the life of the Contract.

2.1. Monthly PVC Materials Value (MV) and Base PVC Materials Value (BV)

The Monthly PVC Materials Value (MV) will be established by McGraw-Hill Engineering News Record (ENR) from the monthly published price for 8-inch diameter PVC sewer pipe for Seattle, Washington.

The Base PVC Materials Value (BV) for this Project will be the MV published in the month of the bid opening in ENR magazine. The MV and BV will be available at the ENR website at: http://enr.construction.com/

If the selected index ceases to be available for any reason, the ENGINEER, at his discretion, will select and begin using a substitute price source or index to establish the MV each month. The ENGINEER makes no guarantee that PVC material will be available at any stated or implied materials price.

2.2. Monthly PVC Materials Price Adjustment

A PVC price adjustment evaluation will be made for the PVC pipe. No adjustments will be made using the BV or MV until such time as they are listed as final values by ENR. The price adjustment as calculated in this provision for the PVC pipe will use the MV for the month that the pipe is ordered from the pipe manufacturer/supplier, thus establishing a price for the pipe. The CONTRACTOR shall submit copies of invoices from the pipe manufacturer/supplier that shows the date the materials were ordered, the quantities of pipe materials and the price of the pipe. A price adjustment for the PVC pipe will be considered as per the above. A price adjustment for the PVC Pay Items will only be made if the MV for the month that the pipe is purchased differs by more than 5% from the BV. A PVC materials price adjustment will be made for the PVC pipe Pay Items identified in section C.3 below only.

A. The Monthly PVC Materials Price Adjustment will be determined as follows:

1. If the MV is within 5% ± of the BV, there will be no adjustment.
2. If the MV is more than 105% of the BV, then:

   PA = (((MV-BV) ÷ BV) - 0.05) x ((BV ÷ MV) x (PIP))

3. If the MV is less than 95% of the BV, then:

   PA = (((MV-BV) ÷ BV) + 0.05) x ((BV ÷ MV) x (PIP))

B. Where:

1. PA = Price Adjustment, dollars
2. MV = Monthly PVC Materials Value from ENR for 8-inch diameter PVC sewer pipe for Seattle, Washington for the month determined above
3. BV = Base PVC Materials Value from ENR for 8-inch diameter PVC sewer pipe for Seattle, Washington from month of the bid opening
4. PIP = Amount paid for PVC pipe material only, based on invoices provided by the CONTRACTOR, for the month for which the adjustment is made

2.3. PVC Materials Pay Items

A PVC material price adjustment for fluctuations in the cost of PVC will apply only to the major PVC usage Pay Items shown in the following list:

Pay Item Description

0257 - 8-inch ASTM D3034 SDR 35 Sanitary Sewer
0296 - 8-inch ASTM D3034 SDR 35 Storm Sewer
0297 - 10-inch ASTM D3034 SDR 35 Storm Sewer
0298 - 12-inch ASTM D3034 SDR 35 Storm Sewer
0260 - 15-inch ASTM D3034 SDR 35 Sanitary Sewer
0299 - 15-inch ASTM D3034 SDR 35 Storm Sewer
0261 - 18-inch ASTM F679 Sanitary Sewer
0263 - 24-inch ASTM F679 Sanitary Sewer

Regardless of the number of Pay Items listed, the PVC Price Escalation/De-Escalation Clause (and program) contained in this section is the only PVC Price Escalation/De-Escalation Clause (and program) that applies to this Contract.

END OF SECTION

SPECIAL PROVISIONS

SECTION D – Site Preparation

P21067 10th and N Sewer Upgrade – Phase 2

D1. General

1.1 Description

Work includes all demolition and clearing indicated on the plans or required for completion of work specified elsewhere. **Note: This special provision is supplemental to Section 203 the Standard Construction Specifications.**

1.2 Site Conditions

A. Existing Conditions - CONTRACTOR shall determine extent of work requirements and limitations before proceeding with work. See Section H, Private Property Condition Documentation and Owner Approval.

B. Protection - Protect existing site improvements, trees and shrubs against cutting, breaking or skinning of roots, skinning and bruising of bark, smothering of roots by stockpiling construction materials, excavated materials, excess foot or vehicular traffic and parking of vehicles within drip line. Provide temporary guards, as necessary, to protect trees and vegetation to be left standing. Repairable damage to trees designated to remain shall be made by a professional tree surgeon approved by the ENGINEER. Cost shall be borne by the CONTRACTOR.

C. Existing Utilities - Before starting any site work, call One Call (811) for utility locates and to notify utility agencies; disconnect or arrange for disconnection of utilities (if any) affected by required work. Keep all active utilities intact and in continuous operation.

D2. Products

2.1 Ownership of Existing Materials

All materials, equipment, items and debris involved, occurring or resulting from demolition, clearing and grubbing work shall become the property of the CONTRACTOR at the place of origin except as otherwise indicated.

2.2 Wound Paint

Emulsified asphalt formulated for use on damaged plant tissues, as approved by the ENGINEER.

D3. Execution

3.1 Workmanship

Perform work in accordance with recognized standard and efficient methods. Operators of equipment shall be conscientious and skilled.

3.2 Clearing

A. Clearing - Remove trees, saplings, snags, stumps, shrubs, brush, vines, grasses, weeds and other vegetative growth within the work area zone except those trees and shrubs noted to remain or as directed by the ENGINEER. Clearing shall be performed in such a manner as to remove all evidence of the presence of vegetative growth from the surface of the project site as required for construction and shall be inclusive of sticks, branches, grasses and weeds, except as otherwise indicated.

B. The CONTRACTOR shall remain within the easement lines at all times.

C. Except in areas to be excavated, all holes resulting from the clearing and grubbing operations shall be backfilled and compacted in accordance with the applicable sections of these Specifications.

3.3 Preservation and Trimming of Trees, Shrubs and Other Vegetation

The CONTRACTOR shall avoid injury to trees, shrubs, vines, plants, grasses and other vegetation growing outside of the areas to be cleared and grubbed and those trees and shrubs designated to be preserved. Provide protection for roots and limbs over 1-1/2-inch diameter cut during construction operations. Coat the cut faces with emulsified asphalt. Temporarily cover exposed roots with wet burlap to prevent roots from drying out; cover with earth as soon as possible.

3.4 Landscaped Areas

When necessary for the completion of the proposed work crosses private property or landscaped areas, the CONTRACTOR shall excavate the topsoil separately and pile it on the opposite side of the trench from the subsoil and shall conduct his work in a manner that will restore original conditions as nearly as practicable. All shrubs or plants shall be balled by experienced workers, carefully handled and watered, and replaced in their original positions without damage. Sod shall be handled in a similar manner. Wherever sod cannot be saved and restored, the ground must be reseeded and cared for until a stand of grass is reestablished. Plants or shrubs killed or destroyed must be paid for by the CONTRACTOR. Unless otherwise specified, any resulting voids shall be thoroughly checked for drainage and backfilled imported material compacted to the density of the adjacent soil.

See Section C, Measurement and Payment, and City of Springfield Standard Specifications for lawn and landscaping restoration. All costs incurred by the CONTRACTOR shall be absorbed in the unit prices of his bid unless otherwise specified.

3.5 Demolition, Removal and Disposal

Remove from the project site all debris, materials, equipment and items found thereon and materials and debris resulting from the work of demolition except as otherwise indicated. All existing improvements designated on the Plans or specified to be removed including but not limited to structures, pipelines, walls, footings, foundations, slabs, pavements, curbs, fencing and similar structures occurring above, at, or below existing ground surface shall be included in the demolition work.

A. Removal - All material resulting from demolition and clearing and trimming operations shall be removed from the project site and disposed of in a lawful manner. No burning of debris or any other discarded material will be permitted. Materials placed on property of private property owners shall be by written permission only.

B. Clean-up - During the time that the work is in progress, the CONTRACTOR shall maintain the site in a neat and orderly condition. All refuse, broken pipe, excess fill material, cribbing and debris shall be removed as soon as practicable. Should the work not be maintained in a satisfactory condition, the OWNER may cause the work to stop until the clean-up of the work has been done to the satisfaction of the ENGINEER. The work will not be considered complete or the final payment certificate issued until all rubbish, unused material, or equipment shall have been removed and the premises left in a condition satisfactory to the OWNER and the ENGINEER.

END OF SECTION

SPECIAL PROVISIONS

SECTION E – Pavement and Surface Restoration

P21067 10th and N Sewer Upgrade – Phase 2

E1. General

1.1 Scope

This section covers the work necessary to furnish and install asphalt concrete pavement restoration and striping for trenches and roadway paving. All work shall conform to the specifications of this Section, Lane County Standards and City of Springfield Standard Specifications except as modified herein. In the case of discrepancy the more stringent provisions shall apply.

1.2 Reference Standards

A. Refer to the revised 1994 City of Springfield Standard Construction Specifications, Section 310 Asphalt Concrete Pavement, and Section 407 Resurfacing Trench Areas, with 1998 revisions. The following temporary amendments to the City of Springfield Standard Construction Specifications will also apply.

B. Refer to the latest version of the Oregon Department of Transportation (ODOT) Standard Specifications for Construction, Section 00745 – Hot Mixed Asphalt Concrete (HMAC).

C. Refer to the revised 1994 City of Springfield Standard Construction Specifications, Section 317 Permanent Traffic Control, with 1998 revisions and the Plans for pavement marking, striping and legend requirements.

1.3 Submittals

Job mix Certification from Lane County Materials Laboratory.

1.4 HMAC Mix Classifications

Where "Class C" mix is identified on the Plans and in the City of Springfield Standard Construction Specifications, it is understood to be Level 3, 1/2-Inch Dense HMAC, as defined in the ODOT Standard Specifications for Construction.

E2. Products

Replace the City of Springfield Standard Construction Specifications, Sub-Section 310.2.00 MATERIALS with the ODOT Standard Specifications for Construction Sub-Sections 00745.10 through 00745.30 as modified below.

00745.10 Aggregate - In the paragraph that begins "Provide and stockpile…", remove the words "and RAP aggregates".

Add the following paragraph:

Production crushing and stockpiling of aggregate for use in HMAC will be at the sole discretion of the CONTRACTOR in accordance to Section 00165 of the 2008 edition of the Oregon Standard Specifications for Construction.

00745.10(a-1) Separated Sizes – Delete the third sentence from the first paragraph.

00745.10(a-2) Scalping – Delete this subsection.

00745.10(b-2) Separated Sizes – Delete this subsection.

00745.10(b-3) Grading – Delete all but the first sentence of this subsection.

00745.10(c-2) Separated Sizes – Delete this subsection.

00745.10(c-3) Grading – Delete all but the first sentence of this subsection.

00745.10(c-4) Combination of Fine Aggregate for Testing – Delete this subsection.

00745.10(f) Aggregate Production Quality Control – Delete the second sentence.

00745.10(g) Preproduced Aggregate – Replace this subsection, except for the subsection number and title, with the following:

The material shall meet the requirements of 00745.10.

00745.11(a) Asphalt Cement – Add the following:

Use PG 70-22 grade asphalt for dense graded HMAC, or grade approved by ENGINEER. Use PG 64-22ER for open graded HMAC, or grade approved by ENGINEER.

In addition to the requirements in the ODOT Standard Specifications for Asphalt Materials, the PG 64-22ER grade for HMAC shall meet the following limit when tested according to AASHTO T 301 "Standard Method of Test for Elastic Recovery Test of Asphalt Materials by Means of Ductilometer". The samples will be conditioned per AASHTO T 240 "Standard Method of Test for Effect of Heat and Air on a Moving Film of Asphalt (RTFOT) prior to testing per AASHTO T 301. The specified Temperature for section 3.3 of the AASHTO T 301 procedure shall be 77°F.

% Elastic Recovery – **50** minimum.

00745.11(b) Asphalt Cement Additives - Replace this subsection, except for the subsection number and title, with the following:

Use standard recognized asphalt cement additive products of known value for the intended purpose and approved for use on the basis of laboratory tests. Asphalt cement additives shall have no deleterious effect on the asphalt material and be completely miscible. Do not use silicones as an additive. Add the following asphalt cement additives when required by the JMF(Job Mix Formula):

Anti-stripping asphalt cement additives to prevent stripping or separation of asphalt coatings from aggregates to satisfy the TSR (Tensile Strength Ratio) specified in 00745.13.

Asphalt cement admixtures used to aid in the mixing or use of asphalt mixes or for experimental purposes.

00745.13(a) Contractor Provided JMF – Delete first paragraph and add the following:
A CMDT will prepare, sign and submit a JMF to the ENGINEER for each mixture according to ODOT Contractor Mix Design Guidelines for Asphalt Concrete. The ENGINEER will verify the performance characteristics of all CONTRACTOR provided JMF. Submit material samples for verification testing no later than March 1 of the calendar year of the anticipated use of HMAC mixture. Furnish representative samples of materials to be used in the JMF verification testing as follows:

Materials	Amount
New Coarse Aggregate	100 lbs *
New Fine Aggregate	100 lbs
Reclaimed Asphalt Concrete	45 lbs
Hydrated Lime	5 lbs
Mineral Filler	5 lbs
Asphalt Cement (without antistrip)	3 gal in 1-qt cans
Antistrip Additive	1 qt

*If coarse or fine aggregate is in multiple stockpiles, divide the submittal evenly between stockpiles.

Verification testing will use Gyratory compaction methods.

00745.13(b) JMF Requirements – Add the following:
A request for an adjustment to the JMF targets may be made to the ENGINEER by the CONTRACTOR's CAT-II. The requested change will be reviewed and documented by the ENGINEER. If acceptable, a revised JMF will be allowed. Clearly document the sublot test for which the adjusted targets are in effect.

Adjustments for gradation shall not exceed the tolerances specified below. Adjustments for AC content shall be within 0.5% of the original JMF, but shall not exceed the requirements of 00745.03. Regardless of these tolerances, the adjusted JMF shall be within the mixture specification control points of 00745.12. If a redesign of the mixture becomes necessary, submit a new JMF according to the requirements of the Specifications.

Aggregate Passing Sieve Size	(%) From JMF
No. 4	+/- 2
No. 8	+/- 1
No. 30	+/- 1
No. 200	+/- 0.5

Field adjustments will not be made unless the change produces material of equal or better quality. Adjustments beyond these limits will require development of a new JMF according to 00745.13(b). The adjusted JMF, plus or minus the allowed tolerances, shall be within the broadband limits specified in 00745.12(b).

00745.13(c) Performance Test – Delete this subsection.

00745.14 Tolerances and Limits - Replace the tolerance list with the following tolerance list:

Gradation	Dense-Graded HMAC Type				Open-Graded HMAC Type		
Constituent	1"	3/4"	1/2"	3/8"	3/4"	1/2"	ATPB
1 1/2"	JMF ± 5%*						
1"	90 - 100%	JMF ± 5%*			99 - 100%		99 - 100%
3/4"	JMF ± 5%	90 – 100%	JMF ± 5%*		85 - 96%	99 - 100%	85 - 95%
1/2"	JMF ± 5%	JMF ± 5%	90 - 100%	JMF ± 5%*	55 - 71%	90 - 98%	35 - 68%
3/8"**	-	-	-	90 - 100%	-	-	-
No. 4	JMF ± 5%	JMF ± 5%	JMF ± 5%	JMF ± 5%	JMF ± 5%	JMF ± 5%	JMF ± 5%
No. 8	JMF ± 4%	JMF ± 4%	JMF ± 4%	JMF ± 4%	JMF ± 4%	JMF ± 4%	JMF ± 4%

No. 16**	-	-	-	-	-	-	-
No. 30	JMF ± 4%	JMF ± 4%	JMF ± 4%	JMF ± 4%	JMF ± 4%	JMF ± 4%	-
No. 50**	-	-	-	-	-	-	-
No. 100**	-	-	-	-	-	-	-
No. 200	JMF ± 2.0%	JMF ± 2.0%	JMF ± 2.0%	JMF ± 2.0%	JMF ± 2.0%	JMF ± 2.0%	JMF ± 2.0%

* Maximum not to exceed 100%
** Report percent passing sieve when no tolerance is listed

In the "Constituent of Mixture" table; Moisture content at time of discharge test, delete "WAQTC TM6" and replace with "AASHTO T329; or AASHTO T255, Microwave method".

00745.16 HMAC Production QC/QA – Delete subsections (a) and (b) in their entirety and add the following:

Quality control sampling and testing by the CONTRACTOR, as defined by the Standard Specifications, is suggested but not required. The CONTRACTOR is advised to perform sufficient testing to insure compliance to the material requirements.

00745.16(c) Quality Assurance and Acceptance – Replace this subsection, except for the subsection number and title, with the following:

The ENGINEER, according to Section 00165.40 and the following, will perform acceptance sampling and testing of HMAC**:**

(1) Random Sampling – Random sampling of HMAC shall be performed by Lane County according to the following:

(a) Grade Samples – A minimum of one grade sample from each lot or sublot after placing and before rolling. Samples will not be taken within 1 foot of the edge of the panel. Samples will be obtained according to AASHTO T168.

(b) Plant Samples – A minimum of one sample from each lot or sublot from the discharge of the paving plant mixer and before placing into a storage silo or hopper when:

- The nominal compacted thickness as shown on the typical section of the plans, for an entire pavement panel will be less than 1 1/2 inches.
- The paving panel being placed is less than 8 feet wide.
- Paving miscellaneous areas, such as driveways, approaches, guardrail flares, and areas of restricted width or limited length.
- Paving temporary surfacing or leveling courses.
- Paving open-graded mixtures.

(c) Moisture Samples – Moisture samples will be taken from the discharge of the paving plant mixer a minimum once each day, or as directed.

(d) Partial Sublots – Each day, at the end of the production shift, regardless of the project size, the quantity exceeding the 750-ton sublot increment by 250 ton, or less, shall be represented by the previous 750-ton sublot. If the quantity exceeds the 750-ton sublot increment by more than 250 ton, the quantity shall be considered an independent sublot.

(2) Testing – HMAC testing shall be performed by the ENGINEER according to the following:

(a) Asphalt Cement Content – Test according to "Asphalt Content by Ignition Method, Lane County Procedure" (a modified AASHTO T308). The test procedure is available from the Project Manager.

(b) Aggregate Gradation – Test according to AASHTO T27 test method.

(c) Moisture Content – Test according to AASHTO T255 test method, Microwave Method.

(d) Compaction – Acceptance testing for compaction will be according to Section 00745.49. For any failing sublot of pavement, the CONTRACTOR may request one new backup compaction test on the same day. New nuclear gauge tests will be obtained at new randomly selected sites. The average of these five new nuclear density tests will constitute the backup in-place density of the sublot. The higher of the original and backup test results will prevail.

The ENGINEER may test any area that appears defective in compaction and require further compaction or corrective action on any area that does not meet specifications.

(e) Backup Testing – If the gradation test result of the sieve analysis varies from the JMF by 1.5 times or more from the tolerance limits specified in 00745.14, a backup sample from the random grade sample will be tested. The test result, which yields the highest CPF for that sublot, will be used. If the original and backup test results yield the same CPF, the original test results will be used.

(f) Minimum Pay Factor for Each Constituent – Stop production when the pay factor for any constituent with a weighting factor greater than 1 falls below 0.75. Resume production when the ENGINEER accepts a plan for correction.

00745.17 Small Quantity Acceptance – Replace this subsection, except for the subsection number and title, with the following:

When the quantity of HMAC on a Project is less than 1,750 tons or less than three test results are obtained, the ENGINEER may accept the HMAC according to Section 00745.16(c) of these Special Provisions. The test results will be evaluated in accordance to 00745.95(a) of these Special Provisions.

00745.17(b) Outside Specifications Limits – Replace the first sentence with the following:
If a sublot sample test result for any constituent is 1.5 times or more outside the specification limit, the ENGINEER will have the backup sample tested.

00745.17(b-2) Backup Out of Specification – Replace this subsection, except for the subsection number and title, with the following:

If the backup sample test results are out of specification, an adjustment will be calculated according to 00745.95(a-1). The test results that produce the lowest Cumulative Weighted Deviation will be used in the price adjustment calculation.

00745.17(b-3) In Place Samples – Delete this subsection:

00745.24(a) Steel-Wheeled Rollers - Replace this subsection with the following subsection:

(a) Steel-Wheeled Rollers - Provide steel-wheeled rollers with a minimum gross static weight as follows:

	Level 1 and Level 2	**Level 3**	**Level 4**
Breakdown and Intermediate	8 ton	10 ton	12 ton
Finish	6 ton	8 ton	10 ton

E3. Execution

Replace the City of Springfield Standard Construction Specifications, Sub-Section 310.3.00 CONSTRUCTION with the ODOT Standard Specifications for Construction Sub-Sections 00745.40 through 00745.93 as modified below.

00745.40 Season and Temperature Limitations In the table, for Surface Temperature of Dense Graded Mixes 2 inches to 2 1/2 inches, replace "50 °F" with 40 °F".

00745.46 Control of Line and Grade - Add the following paragraphs to the end of this subsection:

The CONTRACTOR shall establish references at reasonable intervals for line and grade control of placement operations for the following:

Before placing each leveling lift.
Before placing the top base course for new construction.

If grade controls are established, line and grade for the top base course of new construction and top leveling lift shall be within 1/2 inch of existing line and grade.

00745.48(c) Placing – Add the following:

The ENGINEER will establish leveling locations and paving needs.

Paving equipment used shall be sized appropriately for the size roads listed in the contract. Equipment that is either undersize or oversize for the intended work, which will not produce satisfactory workmanship, will be replaced with appropriately sized equipment.

Change the reference in the last paragraph from 00745.16(b-1) to 00745.13(b) of these Special Provisions.

00745.49 Compaction, QC – Add the following:

The QC program as described in this section of the Standard Specifications will not be used. The ENGINEER will perform acceptance compaction testing using procedures as modified or added in these Special Provisions. The CONTRACTOR is responsible to perform sufficient compaction testing to insure minimum compaction requirements have been attained.

00745.49(b) Normal Pavement (Nominal Thickness 2 inch or Greater) – Replace the subsection heading with the following:

00745.49(b) Normal Pavement (Nominal Thickness 1 1/2 inch or Greater)

00745.49(b-1) General - In the paragraph that begins "Compliance with the density...", replace the sentence that begins "Use the MAMD method..." with the following sentence:

Use the MAMD method of compaction measurement.

Replace the paragraph that begins "For Level 3 and Level 4..." with the following two paragraphs:

For Level 2, Level 3, and Level 4 mixes, construct a control strip at the beginning of work on each JMF on the project according to ODOT TM306. The purpose of the control strip is to determine the maximum density that can be achieved for the JMF, paving conditions, and equipment on the project. Additional control strips are necessary when there is a change in compaction equipment or when JMF targets are

adjusted according to 00745.16(b-1-a). The ENGINEER may waive the control strip for irregular areas or areas too small to establish a reasonable roller pattern.

Stop paving if three consecutive control strips fail to achieve the specified density. Take all actions necessary to resolve compaction problems. Do not resume paving until allowed by the ENGINEER.

Add the following to the third paragraph:

Pneumatic tired roller will be required on Level 2 HMAC, unless waived by the ENGINEER.

00745.49(b-2) Random Testing – Delete reference to "QC" in the first sentence.

00745.49(b-2-a) Testing – Add the following:

Sanding of test locations will not be required.

00745.49(b-2-b) Core Correlations of Nuclear Gauge Readings – Replace this subsection, except for the subsection number and title, with the following:

Core correlation of the nuclear gauge readings is not required. If core correlations are requested, and approved, determine the core correlation factors according to WAQTC TM8 and ODOT TM327. Cut the required cores and patch the core holes with dense graded HMAC.

The party requesting core correlations will pay the costs of coring and lab testing of cores. The costs of nuclear gauge testing performed by each party will be paid by each party.

00745.49(b-3) Moving Average Maximum Density (MAMD) Method - Replace the MAMD list with the following list:

Course of Construction	**HMAC**
First HMAC lift less than 3 inches placed on aggregate base	91.0 *
All other	92.0

* If any part of the width of a lift at a station requires 91.0%, then the entire width of that lift at that station shall be 91.0%

Delete the last paragraph of this subsection.

00745.49(b-4) Control Strip Method - Delete this subsection.

00745.49(b-5) Test Results – Renumber this subsection to b-4, delete the sentence and replace with the following:

The ENGINEER will provide density test results to the CONTRACTOR by the middle of the following work shift.

00745.49(c) Thin Pavement – Replace this subsection, except for the subsection number and title, with the following:

Compaction to a specified density will not be required for leveling, patches, or where the nominal compacted thickness of a course of dense graded mixtures will be less than 1 ½ inches. Perform breakdown and intermediate rolling until the entire surface has been compacted by at least four coverages of the roller(s). Perform additional coverages, as directed, to obtain finish rolling of the HMAC. In areas were pre-leveling is greater than 1 ½ inches, the HMAC shall be compacted to a minimum of 91.0 of the JMF's most recent Maximum Density result.

00745.70 Pavement Smoothness - Replace this subsection with the following subsection:

00745.70 Pavement Smoothness - Construct the pavement wearing surface of travel lanes to a profile that does not deviate from longitudinal and transverse smoothness more than the specified limits of 00745.73.

Perform smoothness testing under the supervision of the ENGINEER with equipment furnished and operated by the CONTRACTOR at the CONTRACTOR's expense. Complete all required smoothness testing no later than seven calendar days following final completion of all travel lane paving on the Project. The CONTRACTOR accepts the risk that the smoothness may be affected by exposure to traffic between the date the travel lanes are paved and the date the smoothness testing is completed. If the CONTRACTOR elects to perform smoothness measurements on a day other than the day the pavement is placed, additional traffic control required for smoothness measurement, and not required for other work, will be at the CONTRACTOR's expense.

Add the following subsection:

00745.72 Smoothness Testing Equipment - Furnish all equipment and supplies for determining smoothness.

(a) Straightedge - Provide one 12 foot straightedge.

(b) Rolling Straightedge – Provide one 12 foot rolling straightedge capable of measuring, on an exaggerated scale, deviations in the paved surface, at the center of the scale, to accuracy of 0.002 foot or less. If requested by the ENGINEER, the CONTRACTOR shall demonstrate the accuracy of the measuring device by setting the equipment up on a flat surface and passing the sensing mechanism over an item of known height. In all cases, the equipment shall be subject to acceptance by the ENGINEER.

Add the following subsection:

00745.73 Smoothness Testing and Surface Tolerances - Test according to the following:

(a) General - Test the base and wearing courses with a 12 foot straightedge and a 12 foot rolling straightedge as directed.

(b) Base Course Surface Test:

(1) Transverse - Test with the 12 foot straightedge perpendicular to the centerline, as directed. The pavement surface shall not vary by more than 0.02 foot.

(2) Longitudinal - Test with the 12 foot rolling straightedge parallel to the centerline, as directed. The pavement surface shall not vary by more than 0.02 foot.

(c) Wearing Course Surface Test:

(1) Transverse - Test with the 12 foot straightedge perpendicular to the centerline, as directed. The pavement surface shall not vary by more than 0.02 foot.

(2) Longitudinal – Test with the 12 foot rolling straightedge over the full width of travel lanes for the entire length of the project, or as directed by the ENGINEER. The pavement surface shall not vary by more than 0.015 foot.

(3) Transverse Joints - Test with the 12 foot straightedge parallel to the centerline, as directed. The pavement surface shall not vary by more than 0.02 foot.

(d) Utility Appurtenances - If the CONTRACTOR is required to construct or adjust utility appurtenances, such as manhole covers and valve boxes, the pavement surface shall not vary by more than 0.02 foot.

(e) Shoulders and Paved Medians - Test the base and wearing course with the 12 foot straightedge parallel to and perpendicular to the centerline for shoulders and paved medians. The pavement surface shall not vary by more than 0.02 foot.

00745.75 Correction of Pavement Roughness - Replace this subsection with the following subsection:

00745.75 Correction of Pavement Roughness - Should testing described in 00745.73 show the pavement does not conform to the prescribed limits of deviation, the following shall apply:

(a) General - The CONTRACTOR, under the supervision of the ENGINEER, is responsible for locating areas that require corrective work.

(b) Base Course - If the requirements of 00745.73(b) are not met, correct according to one of the following and retest.

(1) Cold Plane Removal - Profile with equipment meeting the requirements of Section 00620.20 to a maximum depth of 0.03 foot.

(2) Grinder - Profile with abrasive grinder(s), equipped with a cutting head comprised of multiple diamond blades to a maximum depth of 0.03 foot.

(c) Wearing Course - After the CONTRACTOR has located and staked all individual deviations exceeding 0.02 foot, the ENGINEER and the CONTRACTOR shall meet at a mutually agreed upon time and drive the Project together. Each deviation will be evaluated during the drivethrough to determine what corrective work will be required. Disagreements will be resolved by the ENGINEER.

Correct all individual deviations identified for corrective work during the drive-through and any transverse joint that exceeds the requirements of 00745.73(c-3) by one of the methods listed below to the specified limits.

(1) Remove and Replace - Remove and replace the wearing surface lift. Removal and replacement is required when in the opinion of the ENGINEER a durable long-term repair of the defect cannot be accomplished by conventional means.

(2) Grind - Profile with abrasive grinder(s) equipped with a cutting head comprised of multiple diamond blades to a maximum depth of 0.3 inch and apply an emulsion fog seal as directed.

Under the observation of the ENGINEER, retest each location requiring corrective work according to 00745.73 with a 12 foot rolling straightedge to verify that the deviation has been corrected to within the 0.02 foot tolerance. Perform all corrective work and surface tolerance testing at the CONTRACTOR's expense, including traffic control.

(d) Utility Appurtenances – If the requirements of 00745.73(d) are not met, the CONTRACTOR shall perform sawcutting, removal and readjustment of the utility appurtenance(s) to the required elevation(s) and/or perform other corrective measures to the satisfaction of the ENGINEER.

(e) Time Limit - Complete correction of all surface roughness within 14 calendar days following notification, unless otherwise directed.

00745.80 Measurement – Delete this section and add the following:

The accepted quantities of HMAC will be measured by the ton according to Section 00190. No separate measure will be made for the asphalt cement used in the asphalt concrete mixture. No deduction will be made for lime or any other additive used in the mixture.

The quantities of HMAC shown in the Schedule of Items were computed on the basis of aggregates having a Specific Gravity of 2.65. The provisions of 00140.20 and 00195.20 will apply.

00745.90 Payment - Add the following paragraph to the end of this subsection:

No separate or additional payment will be made for asphalt cement used in the mixture.

00745.93 Other Items – Add to the fifth bulleted item:

No payment will be made for anti-stripping additives required to supplement the JMF to attain minimum mixture performance characteristics. If anti-stripping additives are required by the contract, payment will be at the unit bid price included in the schedule of items.

A. A PRE-PAVING MEETING SHALL BE REQUIRED 48 HOURS PRIOR TO PAVING.

B.Trip tickets shall normally be given to the ENGINEER by the end of the day delivery is made, but in no event shall they be given to the ENGINEER later than 12 noon the following calendar day (Saturday, Sunday, and legal holidays excluded). Trip tickets will be considered as valid only when received by the ENGINEER in accordance with this special provision. All other requirements of the above referenced sub-sections shall apply.

C. GEOTEXTILE INSTALLATION – In the event that the City's wet weather construction standard is invoked on this project, refer to Standard Construction Specification 301.1.01 General, the use of geotextile fabric and an additional eight (8) inches of rock substructure will be required. Where specified, geotextile shall be woven and conform to Standard Construction Specification for Subgrade Geotextile. CONTRACTOR shall comply with Standard Construction Specification 308, Geotextile Installation. Payment shall be incidental to the pavement Bid Items.

D. After the final saw cut is made for the trench "Tee Cut" (see trench detail on Drawings), in areas where the remaining strip of existing asphalt is less than three feet in width, the remaining strip of existing asphalt shall be removed and replaced.

E4. Striping

All striping shall be completed with using City approved thermoplastic material. CONTRACTOR shall replace all striping removed or damaged through construction activities. See sections 00850 through 00867 of ODOT's 2008 Oregon Standard Specifications for Construction for more information.

Note: It is the CONTRACTOR's responsibility to verify all existing striping locations prior to construction.

END OF SECTION

SPECIAL PROVISIONS

SECTION F – Sewage Diversion and By-Pass Pumping

P21067 10th and N Sewer Upgrade – Phase 2

F1. General

1.1 Description

This Section includes the work necessary for sewage diversion and by-pass pumping as needed for construction on existing active sewage facilities.

1.2 Requirements

A. The CONTRACTOR shall submit a "Sewage Diversion and By-Pass Pumping Plan" to the ENGINEER prior to the start of construction. Under no circumstances shall sewage be allowed to flow or leak onto the ground surface, into gutters or onto streets, over sidewalks, or into storm inlets. All diverted sewage shall be discharged back to the existing sanitary sewer system. The Sewage Diversion and By-Pass Pumping Plan shall outline the CONTRACTOR's proposed method of handling all sewage flow during all elements of construction. The plan shall show all flow inputs (connections) in the work area and how the flow from each connection will be managed. Flow inputs shall be confirmed by the contractor during initial field surveys and television inspections. The CONTRACTOR shall provide complete diversion regardless of flow rate. Additionally the plan shall contain, at a minimum, a plan view of each proposed diversion on a site map and the individual components of the diversion including but not limited to:

1. Pumps: type, size and placement
2. Diversion pipe: size, type, and placement
3. Power supply to pumps
4. Method of damming the flow
5. Facilities for redundancy

B. When necessary to provide for the construction on an existing sewer system, the flow shall be diverted by the use of pumps to a manhole downstream of the construction. The CONTRACTOR shall have adequate pumps and piping or alternative methods to divert flow to the downstream sewer lines. The pumping or transportation capacity shall be sufficient to maintain normal sewage flows plus additional flows that may occur during a rainstorm.

C. Sewage diversion piping shall be buried or arranged such that the piping is protected from traffic loads, traffic is maintained at driveways and roadways, and sidewalks are free of obstruction unless otherwise approved by the ENGINEER. All sewage diversion piping shall be water-tight. Surface restoration that is required for installing sewage diversion piping and other appurtenances is incidental to the sewage diversion and by-pass pumping pay item.

D. The CONTRACTOR shall use critically silenced generators and pump units with hospital-grade mufflers and shall meet or exceed the requirements of any local noise ordinances. Such approved generators and accompanying pumps shall be continuously monitored while in operation and shall be placed to minimize disturbances to residential areas. If necessary to meet noise ordinances, sound baffles and temporary sound walls shall be installed to deflect sound from generators and bypass-pumps away from residential areas or as directed by the ENGINEER.

No variance from any local noise ordinances will be allowed unless the CONTRACTOR secures a noise variance at no additional expense to the OWNER.

E. Diversion of all sewage flow shall be maintained at all times. The CONTRACTOR shall provide a qualified operator who is capable of making emergency repairs or who is able to mobilize forces to handle power, pump or other problems. This operator shall be on site immediately near the pumping system at all times. The CONTRACTOR shall be responsible for continuity of sewer service to each facility connected to the section of the sewer being impacted during the execution of the work. Diversion pumping equipment and piping shall be tested for leaks prior to pumping sewage. Leak testing shall be performed any time the diversion pumping system is disassembled, reassembled and/or modified. No leaks in the diversion piping shall be permitted. Only potable water shall be used for leak testing of pipes. Diversion pipes shall be cleaned and disinfected prior to disassembly and the liquid shall be discharged into an existing sanitary sewer. Service connections or laterals shall not be disconnected or plugged overnight. Service must be restored to service connections or laterals within the normal work day, or no later 6 p.m. on the same day.

F. Each sewage diversion pump shall be powered by a dedicated power generator and shall operate as a single pumping unit. For system redundancy, the CONTRACTOR shall have on site an equivalent back-up sewage pumping unit for each pumping operation.

G. Flow diversion piping and pumps shall be free of leaks. Leaking pipes and pumps shall be replaced immediately. Sewage spills shall be cleaned up immediately. If a sewage release occurs during any sewage diversion activity, the CONTRACTOR shall be responsible for taking immediate action to cease, contain, and clean up the release, and to notify the proper authorities. The CONTRACTOR shall have sufficient equipment and materials at the work site to cease, contain and cleanup any sewage release that occurs during diversion operations and will be responsible for all costs associated with sewage spill cleanup including associated fines. The CONTRACTOR shall be responsible for cleanup, repair, property damage costs and claims.

H. No sewage diversion operations may proceed unless the CONTRACTOR has, at the work site, the following items:

1. Dry granular lime, of sufficient quantities, to be spread on any release for purposes of disinfectant. A 10% bleach solution may also be used as a disinfectant. Disinfectants may not be directly applied to any surface waters, streams, creeks, etc.

2. Equipment to secure the area of sewage release and isolate the public from accessing the release site. As a minimum this shall include barricades and caution tape.

3. The equipment and materials on hand to stop the release and repair the failed item.

4. Equipment and materials to clean the site, rake up solid debris and to dispose of material properly.

I. In case of sewage release during diversion operations, the CONTRACTOR shall immediately contact the following authorities notifying them of the release:

1. City of Springfield On-Site Project Inspector

2. If the Project Inspector is not capable of being immediately notified, then contact the City of Springfield Collection System Compliance Officer or their Designee. Those individuals are:

   a) Collection System Compliance Officer – Brian Conlon – Phone: 541-726-3753

b) Designee – Mike Risley – Phone: 541-726-3615

The representative of the City of Springfield shall report the sewage spill within 24 hours to the Oregon Department of Environmental Quality and any other appropriate entities. Even if a sewage spill or release is contained within an excavation, the spill or release must be reported.

Failure by the CONTRACTOR to report a spill or release to the appropriate City representative will result in liquidated damages in the amount of $500.00 per incident plus an amount sufficient to reimburse the City for any civil and administrative penalties paid by the City as a result of the CONTRACTOR's failure to report as described above.

J. The CONTRACTOR shall be responsible for providing the following information to the authorities in case of a spill or release:

1. Release location
2. Date and time release found or started and time stopped
3. Release flow rate and estimated total volume
4. Receiving stream, if any
5. Action taken to stop release
6. Cause of release
7. Clean-up actions taken
8. Any other information as requested by relevant authorities

K. Upon completion of construction, all flow diversion piping and pumps and related facilities shall be removed and all affected areas restored to their prior condition.

END OF SECTION

SPECIAL PROVISIONS

SECTION G – AC Pipe Removal

P21067 10th and N Sewer Upgrade – Phase 2

G1. Scope

1.1 Description

The work addressed in this section is the removal of any asbestos cement pipe. There is no scheduled AC Pipe removal for this project, but should existing AC pipe be damaged, or unforeseen pipe be encountered, these specials will cover the removal of said pipe. This work shall include permits, mobilization of equipment, insurance coverage, bonding, preparation of job site, security measures, temporary traffic control, and clean-up necessary for satisfactory completion of work.

Note: Payment for AC Pipe Removal shall be treated as Bid Item 0297 and shall be paid for a Linear Foot (L.F.) basis. All work required to properly remove, dispose of, and backfill the trench and pipe materials shall be considered incidental to this bid item. Also see Section C – Measurement and Payment, Bid Item 0297 10-inch ASTM D3034 SDR 35 Storm Sewer for more detail.

G2. Pipe Removal

This section covers removing, handling, transporting, and disposal of asbestos containing materials, see ORS 468A.700 to 468A.760.

2.1 General

The CONTRACTOR shall be fully responsible for the quality and performance of all work required to be furnished by him/her and shall correct any defect in work or material in compliance with the provisions of the Contract and to the satisfaction of the ENGINEER.

2.3 Handling

Handling of pipe shall be in accordance with the requirements of the Lane Regional Air Protection Agency. All pipe and accessories shall be handled in such a manner as to insure removal from the trench without causing the pipe to shatter, crumble, be pulverized, or release free asbestos fibers.

CONTRACTOR shall remove and dispose of all asbestos containing materials encountered. CONTRACTOR is responsible for proper identification, handling, and disposal of asbestos materials. CONTRACTOR shall provide properly trained and certified workers and shall be prepared to deal with both friable and non-friable forms of asbestos pipe. Permit and permit fees related to this work shall be the CONTRACTOR's responsibility. CONTRACTOR is solely responsible for pursuing work in a way that is consistent with all state, local, and federal rules, regulations, and guidelines. An asbestos management plan shall be provided to ENGINEER five days prior to the preconstruction conference addressing the following:

- Personnel training and experience
- Subcontracted specialists including contact information

- Anticipated work scope and contingency measures
- Worker safety and OSHA compliance
- LRAPA Permitting and compliance
- Plan for removal and disposal of friable material
- Plan for removal and disposal of non-friable material.

2.4 Disposal of Material

The CONTRACATOR shall remove all asbestos contaminated excavated material from the project site for disposal at a landfill licensed to handle asbestos waste.

END OF SECTION

SPECIAL PROVISIONS

SECTION H – Private Property Condition Documentation and Owner Approval

P21067 10th and N Sewer Upgrade – Phase 2

H1. General

1.1 Description

This work consists of providing photographic documentation of pre-construction and post-construction conditions on all private properties affected by CONTRACTOR's work and obtaining approvals and releases from all private property owners who may be impacted by the construction of the project.

1.2 Photographic Documentation of Pre-Construction and Post-Construction Conditions

The CONTRACTOR shall provide to the ENGINEER photographic documentation of pre-construction and post-construction conditions on all private properties affected by CONTRACTOR's work. The CONTRACTOR shall provide to the ENGINEER digital photos of each area of work on private properties sufficient to document the conditions prior to the start of the CONTRACTOR'S work and immediately after completion of the CONTRACTOR'S work. Submit all photos to the ENGINEER by Line and Street Address in an organized manner on compact discs before Final Payment.

1.3 Property Owner Approval and Release

Prior to final payment, the CONTRACTOR shall obtain a release from the property owner on the Homeowner Approval and Release Form contained in this document. confirming that the site restoration work is satisfactory to the property owner. All releases shall be submitted to the ENGINEER before final payment.

CONTRACTOR shall show that at least two attempts were made to secure property owner approval sign-off. A list of affected property owners by address shall be submitted showing attempts made and status of property owner approval sign-off.

END OF SECTION

SPECIAL PROVISIONS

SECTION I – Traffic Control

P21067 10th and N Sewer Upgrade – Phase 2

I1. General

1.1 Summary

This item shall include the submission of a traffic control plan (TCP) for work within the public right-of-way during all phases of work. The plan shall show each individual phase of the project with a schedule and map showing placement and description of each temporary traffic control device. The plan shall comply with the current Manual on Uniform Traffic Control Devices (including the Oregon Supplements) and the current Oregon Department of Transportation "Oregon Temporary Traffic Control Handbook." The plan must illustrate changes in lane usage, locations, and types of traffic control devices, and shall encompass advanced warning for all intersecting streets.

1.2 Related Specifications

A. Springfield Standard Construction Specifications

B. Manual on Uniform Traffic Control Devices for Streets and Highways

1.3 Submittals

A. Traffic Control Plan: Traffic Control Plan(s) (TCP) shall be submitted for all projects in the public right-of-way no later than two (2) weeks before work begins and **shall be submitted using the attached City of Springfield TCP submittal form**. If this plan is not received and approved prior to starting, the ENGINEER reserves the right to shut down all work at the CONTRACTOR's expense (with a written stop work order to follow within 24 hours) until a plan has been approved and implemented. Any sidewalk closures or detours shall also be noted and submitted with the traffic control plan.

I2. Products

2.1 Equipment

A. The devices to be furnished and used by the CONTRACTOR and their placement shall conform to the requirements indicated on the plans. Cases, conditions, and details not covered on the plans shall conform to the applicable provisions of Part IV of the Manual on Uniform Traffic Control Devices for Streets and Highways (M.U.T.C.D.), including the current Oregon Supplements.

I3. Execution

3.1. Temporary Traffic Control

A. No work shall be permitted until the area has been signed as per the approved Traffic Control Plan. The signing shown on the traffic control plan is the minimum required signing. All signs, barricades, cones, flaggers, and other such "devices" to warn, safeguard, protect,

guide, and inform the public and the workers during the life of the project shall be furnished, constructed, installed, maintained, moved and removed by the CONTRACTOR.

B. The CONTRACTOR has the obligation to determine how to construct the project and control traffic throughout the area during the construction period with a proper TCP. Traffic detours must follow arterials and/or collectors. Lane shifts and lane reductions will be allowed.

C. Proposed traffic control may include plans for single lane operations on Centennial Boulevard with appropriate signage and flaggers. Full movement bi-directional operation of Centennial Boulevard shall be restored and maintained thru the facilities AM peak period of 7:00am to 8:15am and PM peak period of 4:00pm to 6:00 pm for all days of the week.

D. All work being done on school days shall allow for flaggers at pedestrian crossings on Centennial Boulevard.

E. All work areas shall be properly controlled for pedestrian and bicycle safety in addition to standard vehicle traffic and shall comply with the standards stated above. All relevant government agencies shall be notified with relative permits and documentation provided for detours and road work to be performed.

3.2 Signing

A. Existing Signing: All existing guide signs, warning signs, and regulatory signs shall be maintained at locations readily visible to the traveling public throughout the life of the project, or until new signs replacing them are installed, whichever occurs first.

B. Construction Signing: All temporary construction signs when not in use shall be either covered or moved so as not to be seen by the traveling public. If construction signing is left in effect when there is no need, the CONTRACTOR has 2 hours after notification to cover or move these signs. If the CONTRACTOR has not taken care of the signs beyond 2 hours of notification, the ENGINEER reserves the right to have City of Springfield employee/s move or cover the signs and bill the CONTRACTOR for time and materials (1 hour minimum).

C. Measurement and payment of traffic control devices for temporary business access shall be considered as incidental to the construction of the work and all costs thereof shall be included in the various contract prices in the bid forms.

D. Project Information Signage:

The CONTRACTOR shall furnish and install project information signs in accordance with the following requirements:

1. For a project located on a confined site such as a reservoir, pumping station, well house, treatment plant, or similar facility, one project information sign shall be required. For a project located on a public right of way such as a pipeline project, a project information sign shall be installed facing each direction of traffic at each location where traffic is entering the work area.

2. A submittal for the project information sign(s) shall be prepared for the ENGINEER's approval prior to fabrication.

3. The CONTRACTOR shall install the project information sign(s) at location(s) as directed by the ENGINEER.

4. No construction work shall commence on the project site until the project information signs are installed.

5. The CONTRACTOR shall maintain the signs through the duration of the project.

6. The cost of furnishing, installing and maintaining the project information signs shall be included in the CONTRACTOR's bid item for traffic control. (Bid Item 0061 Temporary Traffic Control; Lump Sum) A minimum of six project information signs shall be considered for bidding purposes.

The project information sign(s) shall be constructed of 3/4-inch thick plywood with a finish grade of veneer on the sign face. The sign(s) shall be sized as necessary to accommodate the required project information. The sign(s) shall be securely attached to a minimum of two 4-inch square treated wood posts for each 4-foot by 8-foot panel. The sign(s) shall be installed such that the top of the sign is approximately 10 feet above grade or as necessary to permit proper public viewing. Provide adequate supports for the sign(s) as site conditions dictate. The sign(s) shall have black letters on a white background and they shall be the product of a commercial sign manufacturer or supplier. Logos shall be color. The letters shall be at least 4-inches in height. Sign may be buried to a minimum of 3 feet or mounted on City approved movable bases.

The sign(s) will contain basic project information including: Project name, estimated project duration, project construction cost, project OWNER's name and OWNER's contact and phone number, ENGINEER's name, CONTRACTOR's name, OWNER's and ENGINEER's company logos, the CONTRACTOR's logo if the CONTRACTOR so desires, any funding agency logo(s) along with any required wording from those agencies. The logos shall be sized such that they are visible from a distance approved by the ENGINEER. The OWNER, ENGINEER and funding agencies will provide electronic images of their logos for the CONTRACTOR's use in developing the signs.

END OF SECTION

SPECIAL PROVISIONS

SECTION J – Slurry Seal

P21067 10th and N Sewer Upgrade – Phase 2

J1. Slurry Seal Scope of Work

A. Operations will include but not limited to: the work described in the attached plans and specifications, protection of the public from operations, and protection of materials and features within the work area that remain. All work shall be done in accordance with the highest standards of practice in the industry.

B. Codes and Standards: All work shall be furnished in conformance with all applicable codes, statutes and standards that apply to this work including but not limited to:

1. Any applicable Federal, State, or City of Springfield Codes, Standards and Ordinances, including these contract documents and City of Springfield Standard Construction Specifications (current edition and most recent revision).

C. The CONTRACTOR shall determine tools and equipment necessary for execution of project. The CONTRACTOR shall determine the materials and labor necessary to furnish adequate protection for surfaces and objects inside and outside the work area and for adjoining work that could be damaged by preparation and/or work activities. Care shall be taken not to damage any of the existing asphalt or concrete during the work. Any damage shall be repaired at the CONTRACTOR's sole expense.

D. CONTRACTOR is responsible for leaving the site in a neat and clean condition during and after the project. This will include clean up of all debris, safe and sanitary disposal of all material, containers, etc. generated during completion of the project. Further, CONTRACTOR shall remove waste and trash generated by their work. This shall be done at the end of each work day. Take all standard professional precautions to avoid contamination of the environment as required by law and to protect the public from operations. CONTRACTOR shall prepare and submit for approval a plan for containment that outlines how CONTRACTOR will keep contaminants, waste and debris out of the City's Storm Water system. This shall include such items as barriers, catch basin liners, dams, vacuuming, etc. to keep debris and contaminants out of the storm water system.

E. Painting over existing markings to obliterate the markings is not permitted.

J2. Traffic Control

See Section I of the Special Provisions.

J3. Slurry Seal Specifications

3.1 Materials

A. Emulsified Asphalt
The emulsified asphalt, and emulsified asphalt residue, shall meet the requirements of AASHTO M 140 or ASTM D 977 for SS-1 or SS-1h. For CSS-1, CSS-1h, or CQS-1h, it shall meet the requirements of AASHTO M 208 or ASTM D 2397. Each load of emulsified asphalt shall be

accompanied with a Certificate of Analysis/Compliance to indicate that the emulsion meets the specifications.

B. Aggregate

1. General

The mineral aggregate used shall be the type specified for the particular application requirements of the slurry seal. The aggregate shall be crushed stone such as granite, slag, limestone, chat, or other high-quality aggregate, or combination thereof. To assure the material is 100 percent crushed, the parent aggregate will be larger than the largest stone in the gradation to be used.

2. Quality Tests

The aggregate should meet agency specified polishing values and these minimum requirements:

TEST	TEST METHOD		SPECIFICATIONS
	AASHTO	ASTM	
Sand Equivalent Value of Soils and Fine Aggregate	T 176	D 2419	45 Minimum
Soundness of Aggregate by Use of Sodium Sulfate of Magnesium Sulfate	T 104	C 88	15% Maximum w/$NA_2SO_4$25% Maximum w/$MgSO_4$
Resistance to Degradation of Small Size Coarse Aggregate by Abrasion(*) and Impact in the Los Angeles Machine	T 96	C 131	35% Maximum

(*)The abrasion test is run on the parent aggregate.

C. Gradation

When tested in accordance with AASHTO T 27 (ASTM C 136) and AASHTO T 11 (ASTM C 117), the mix design aggregate gradation shall be within one of the following bands or approved by the field engineer:

	SIEVE SIZE	TYPE I PERCENT PASSING	TYPE II PERCENT PASSING	TYPE III PERCENT PASSING	STOCKPILE TOLERANCE FROM THE MIX DESIGN GRADATION
3/8	(9.5 mm)	100	100	100	
#4	(4.75 mm)	100	90-100	70-90	+5%
#8	(2.36 mm)	90-100	65-90	45-70	+5%
#16	(1.18 mm)	65-90	45-70	28-50	+5%
#30	(600 um)	40-65	30-50	19-34	+5%
#50	(330 um)	25-42	18-30	12-25	+4%
#100	(150 um)	15-30	10-21	7-18	+3%
#200	(75 um)	10-20	5-15	5-15	+2%

The gradation of the aggregate stockpile shall not vary by more than the stockpile tolerance from the mix design gradation (indicated in the table above) while also remaining within the specification gradation band. The percentage of aggregate passing any two successive sieves shall not change from one end of the specified range to the other end.

The aggregate will be accepted at the job location or stockpile based on five gradation tests sampled according to AASHTO T 2 (ASTM D 75). If the average of the five tests is within the stockpile tolerance from the mix design gradation, the material will be accepted. If the average of those test results is out of specification or tolerance, the CONTRACTOR will be given the

choice to either remove the material or blend additional aggregate with the stockpile material to bring it into compliance. Materials used in blending must meet the required aggregate quality test specifications in Section 3.1 B – Aggregate, before blending and must be blended in a manner to produce a consistent gradation. Aggregate blending may require a new mix design.

Screening shall be required at the stockpile if there are any problems created by oversized materials in the mix.

1. Type I: This aggregate gradation is used to fill surface voids, address moderate surface distresses, and provide protection from the elements. The fineness of this mixture provides the ability for some crack penetration.

2. Type II: This aggregate gradation is used to fill surface voids, address more severe surface distresses, seal, and provide a durable wearing surface.

3. Type III: This aggregate gradation provides maximum skid resistance and an improved wearing surface.

D. Mineral Filler

Mineral fillers such as Portland Cement, limestone dust, fly ash, and others shall be considered as part of the blended aggregate and shall be used in minimum required amounts. They shall meet the gradation requirements of ASTM D242. Mineral fillers shall only be used if needed to improve the workability of the mix or gradation of the aggregate and shall be done initially in quantities predetermined by the mix design. Field adjustments if required, shall be approved by the City after review of the mix design. The laboratory shall also determine if a mineral filler is required, and if so, how much should be used. Test samples shall be made and tested on a Wet Track Abrasion Machine. Typical use levels are normally 0.0 - 3.0 percent and may be considered part of the aggregate gradation.

E. Water

The water shall be free of harmful salts and contaminants. If the quality of the water is in question, it should be submitted to the laboratory with the other raw materials for the mix design.

F. Additives

Additives may be used to accelerate or retard the break/set of the slurry seal. Appropriate additives, and their applicable use range, should be approved by the laboratory as part of the mix design with field adjustments if required, after approval by the City.

3.2 Laboratory Evaluation

A. General

Sources of all materials shall be selected prior to the time the materials are required for use in the work.

The CONTRACTOR shall submit a signed mix design covering the specific materials to be used on the project. This design will be performed by a laboratory which has experience in designing Emulsified Asphalt Slurry Seal Surfacing. After the mix design has been approved, no material substitution will be permitted unless approved by the City.

ISSA can provide a list of laboratories experienced in slurry seal design.

B. Mix Design

Compatibility of the aggregate, emulsified asphalt, water, mineral filler and other additives shall be evaluated in the mix design. The mix design shall be completed using materials consistent with those supplied by the CONTRACTOR for the project. Recommended tests and values are as follows:

TEST	ISSA TB NO.	SPECIFICATIONS
Mix Time @ 77 ° F (25 ° C)	TB 113	Controllable to 180 Seconds Minimum
Slurry Seal Consistency	TB 106	0.79 – 1.18 inches (2.0 – 3.0 cm)
Wet Cohesion @ 30 Minutes Minimum (Set) @ 60 Minutes Minimum (Traffic)	TB 139 (For quick-traffic systems)	12 kg-cm Minimum 20 kg-cm or Near Spin Minimum
Wet Stripping	TB 114	Pass (90% Minimum)
Wet-Track Abrasion Loss One-hour Soak	TB 100	75 g/ft2 (807 g/m2) Maximum
Excess Asphalt by LWT Sand Adhesion	TB 109 (Critical in heavy-traffic areas)	50 g/ft2 (538 g/m2) Maximum

The Wet Track Abrasion Test is performed under laboratory conditions as a component of the mix design process. The purpose of this test is to determine the minimum asphalt content required in a slurry seal system. The Wet Track Abrasion Test is not recommended as a field quality control or acceptance test. ISSA TB 136 describes potential causes for inconsistent results of the Wet Track Abrasion Test.

The mixing test is used to predict the time the material can be mixed before it begins to break. The laboratory should verify that mix and set times are appropriate for the climatic conditions expected during the project.

The laboratory shall also report the quantitative effects of moisture content on the unit weight of the aggregate (bulking effect) according to AASHTO T19 (ASTM C29). The report must clearly show the proportions of aggregate, mineral filler (if used) and emulsified asphalt based on the dry weight of the aggregate.

The percentages of each individual material required shall be shown in the laboratory report. Based on field conditions, adjustments within the specific ranges of the mix design may be required.

The component materials shall be designed within the following limits:

COMPONENT MATERIALS	SUGGESTED LIMITS
Residual Asphalt	Type I: 10 -16% Type II: 7.5 -13.5% Type III: 6.5 -12% (Based on dry weight of aggregate)
Mineral Filler	0.0 -3.0% 1.0 (Based on dry weight of aggregate)
Additives	As needed
Water	As required to produce proper mix consistency

C. Mix Tolerances

Tolerances for the slurry seal mixture are as follows:

1. After the residual asphalt content is determined, a variation ±1% by weight of dry aggregate will be permitted.

2. The slurry consistency, as determined according to ISSA TB No. 106, shall not vary more than ± 0.2” (± 0.5 cm) from the job mix formula after field adjustments.

3. The rate of application shall not vary more than ± 2 lb/yd2 (± 1.1 kg/m2) when the surface texture does not vary significantly.

3.3 Equipment

A. General
All equipment, tools, and machines used in the application of slurry seal shall be maintained in satisfactory working condition at all times.

B. Mixing Equipment
The machine shall be specifically designed and manufactured to apply slurry seal. The material shall be mixed by an automatic-sequenced, self-propelled, slurry seal mixing machine of either truck-mounted or continuous-run design. Continuous-run machines are those that are equipped to self-load materials while continuing to apply slurry seal. Either type machine shall be able to accurately deliver and proportion the mix components through a mixer and to discharge the mixed product on a continuous-flow basis. Sufficient storage capacity for all mix components is required to maintain an adequate supply to the proportioning controls.

Appropriate equipment shall be used for the type work to be done.

If continuous-run equipment is used, the machine shall provide the operator with full control of the forward and reverse speeds during application of the slurry seal. It shall be equipped with a self-loading device and opposite-side driver stations. The self-loading device, opposite-side driver stations, and forward and reverse speed controls shall be of original-equipmentmanufacturer design.

C. Proportioning Devices
Individual volume or weight controls for proportioning mix components shall be provided and properly labeled. These proportioning devices are used in material calibration to determine the material output at any time.

D. Spreading Equipment
The mixture shall be placed uniformly by means of a spreader box attached to the paver and mechanically equipped, if necessary, to agitate and spread the material evenly throughout the box. With some quick-set systems, mechanical agitation may extend mix time. The slurry seal mixture shall have the proper consistency as it enters the spreader box. Spraying of additional water into the spreader box will not be permitted.

A front seal shall be utilized to ensure no loss of the mixture at the road contact point. The rear seal shall act as final strike-off and shall be adjustable. The spreader box and rear seal shall be designed and operated to provide uniform mix consistency behind the box. The spreader box shall have suitable means to side shift to compensate for variations in the pavement width.

A burlap drag or other approved screed may be attached to the rear of the spreader box to provide a highly textured uniform surface. A drag stiffened by hardened slurry is ineffective and should be replaced immediately.

E. Auxiliary Equipment
Suitable surface preparation equipment, traffic control equipment, hand tools, and other support and safety equipment necessary to perform the work shall be provided by the CONTRACTOR.

3.4 Calibration

Each mixing unit to be used in performance of the work shall be calibrated in the presence of the inspector prior to the start of the project. Previous calibration documentation covering the exact

materials to be used may be acceptable, provided the calibration was performed during the previous 60 days. The documentation shall include an individual calibration of each material at various settings, which can be related to the machine's metering devices. Any equipment replacement affecting material proportioning requires that the machine be recalibrated. No machine will be allowed to work on the project until the calibration has been accepted. ISSA Inspector's Manual describes a method of machine calibration. ISSA Contractors and/or machine manufacturers may also provide methods of machine calibration.

3.5 Weather Limitations

The slurry seal shall not be applied if either the pavement or air temperature is below 50°F (10°C) and falling, but may be applied when both pavement and air temperatures are above 45°F (7°C) and rising. No slurry seal shall be applied when there is the possibility of freezing temperatures at the project location within 24 hours after application. Application will not be permitted if weather conditions or forecast indicates rain, thundershowers, or high humidity conditions, (such as fog) would prevail before the slurry has cured, or if morning dew is evident. The mixture shall not be applied when weather conditions prolong opening to traffic beyond a reasonable time.

3.6 Notification and Traffic Control

A. Notification
Homeowners and businesses affected by the paving shall be notified at least one day in advance of the surfacing. Should work not occur on the specified day, a new notification will be distributed. The notification shall be posted in written form, stating the time and date that the surfacing will take place. If necessary, signage alerting traffic to the intended project should be posted.

B. Traffic Control
Traffic control devices shall be in accordance with agency requirements and, if necessary, conform to the requirements of the Manual on Uniform Traffic Control Devices. Opening to traffic does not constitute acceptance of the work.

In areas that are subject to an increased rate of sharp-turning vehicles, additional time may be required for a more complete cure of the slurry seal mat to prevent damage. Tire marks may be evident in these areas after opening but typically diminish over time with rolling traffic.

3.7 Surface Preparation

A. General
Prior to applying the slurry seal, loose material, oil spots, vegetation, and other objectionable material shall be removed. Any standard cleaning method will be acceptable. If water is used, cracks shall be allowed to dry thoroughly before slurry surfacing. Manholes, valve boxes, drop inlets and other service entrances shall be protected from the slurry seal by a suitable method. The city shall approve the surface preparation prior to surfacing.

B. Tack Coat
Normally, tack coat is not required unless the surface to be covered is extremely dry and raveled or is concrete or brick. If required, the emulsified asphalt should be SS, CSS, or the slurry seal emulsion. Consult with the slurry seal emulsion supplier to determine dilution stability. The tack coat may consist of one part emulsified asphalt/three parts water and should be applied with a standard distributor. The distributor shall be capable of applying the dilution evenly at a rate of 0.05-0.15 gal/yd2 (0.23-0.68 l/m2). The tack coat shall be allowed to cure sufficiently before the application of slurry seal. If a tack coat is to be required, it must be noted in the project plans.

C. Cracks
The city shall provide crack sealing prior to construction.

3.8 Application

A. General
If required, it is recommended that a test strip be placed in conditions similar to those expected to be encountered during the project. The surface may be wetted with water ahead of the spreader box. The rate of application of the water spray shall be adjusted during the day to suit temperature, surface texture, humidity, and dryness of the pavement. Pooling or standing water shall be avoided.

The slurry seal shall be of the desired consistency upon exiting the mixer. A sufficient amount of material shall be carried in all parts of the spreader box at all times so that complete coverage is achieved. Overloading of the spreader shall be avoided. No lumping, balling, or unmixed aggregate shall be permitted.

Significant streaks, such as those caused by oversized aggregate or broken mix, shall not be left in the finished surface. If excessive streaking occurs, the job will be stopped until the cause of the problem has been corrected. Some situations may require screening the aggregate prior to loading it into the units going from the stockpile area to the jobsite.

B. Rate of Application
The slurry seal mixture shall be of the proper consistency at all times so as to provide the application rate required by the surface condition. The average application rate shall be in accordance with the following table:

AGGREGATE TYPE	LOCATION	SUGGESTED APPLICATION RATE
Type I	Parking Areas Urban and Residential Streets Airport Runways	8 -12 lb/yd2 (4.3 -6.5 kg/m2)
Type II	Urban and Residential Streets Airport Runways	10 -18 lb/yd2 (5.4 -9.8 kg/m2)
Type III	Primary and Interstate Routes	15 -22 lb/yd2 (8.1 -12.0 kg/m2)

Suggested application rates are based upon the weight of dry aggregate in the mixture. Application rates are affected by the unit weight and gradation of the aggregate and the demand of the surface to which the slurry seal is being applied.

C. Joints
No excess buildup, uncovered areas, or unsightly appearance shall be permitted on longitudinal or transverse joints. The CONTRACTOR shall provide suitable equipment to produce a minimum number of longitudinal joints throughout the project. When possible, a longitudinal joint shall not be placed in a wheel path. Less than full box width passes will be used only as required. If less than full box width passes are used, they shall not be the last pass of any paved area. A maximum of 6” (15.2 cm) shall be allowed for overlap of longitudinal joints.

D. Mixture
The slurry seal shall possess sufficient stability so that premature breaking of the material in the spreader box does not occur. The mixture shall be homogeneous during and following mixing and spreading. It shall be free of excess liquids which create segregation of the aggregate. Spraying of additional water into the spreader box will not be permitted.

E. Handwork
Areas which cannot be accessed by the mixing machine shall be surfaced using hand squeegees to provide complete and uniform coverage. If necessary, the area to be

handworked shall be lightly dampened prior to mix placement. Handwork shall exhibit the same finish as that applied by the spreader box and shall be completed prior to final surfacing.

F. Lines
Care shall be taken to apply straight lines along curbs, shoulders, and intersections. No run-off on these areas will be permitted. Roofing felt or heavy plastic may be used to begin or end a pull cleanly. This also provides for easy removal of excess slurry.

G. Rolling
Parking areas should be rolled by a self-propelled, 10-ton (maximum) pneumatic tire roller equipped with a water spray system. All tires should be inflated per manufacturer's specifications. Rolling shall not start until the slurry has cured sufficiently to avoid damage by the roller. Areas which require rolling shall receive a minimum of two (2) full coverage passes.

H. Clean Up
All utility access areas, gutters and intersections, shall have the slurry seal removed as specified by the inspector. The CONTRACTOR shall remove any debris associated with the performance of the work on a daily basis.

3.9 Quality Control

A. Inspection
Inspectors assigned to projects must be familiar with the materials, equipment and application of slurry seal. Local conditions and specific project requirements should be considered when determining the parameters of field inspection.

Proper mix consistency should be one of the major areas of inspector concern. If mixes are too dry, streaking, lumping and roughness will be present in the mat surface. Mixes applied too wet will flow excessively and not hold straight lane lines. Excessive liquids may also cause an asphalt-rich surface with segregation.

B. Materials
To account for aggregate bulking, it is the responsibility of the CONTRACTOR to check stockpile moisture content and to set the machine accordingly. At the inspector's discretion, material tests may be run on representative samples of the aggregate and emulsion. Tests will be run at the expense of the CONTRACTOR and results shall be presented to the City immediately.

C. Slurry Seal
If required, representative samples of the slurry seal may be taken directly from the slurry unit(s). Consistency (ISSA TB No. 106) and residual asphalt content (ASTM D2172) tests shall be run on the samples as directed by the inspector. Please note that the consistency test may not be applicable to certain Quick-Set and Quick-Traffic systems because of erratic results due to setting characteristics.

If this test is run, it must be performed immediately after the sample is taken. Tests will be run at the expense of the CONTRACTOR and results shall be presented to the City immediately.

Data obtained from the proportioning devices on the slurry seal unit may be used to determine individual material quantities and application rate.

D. Non-Compliance
If any two successive tests fail on the stockpile aggregate, the job shall be stopped. If any two successive tests on the mix from the same machine fail, the use of the machine shall be suspended. It will be the responsibility of the CONTRACTOR, at his expense, to prove to the city that the problems have been corrected.

APPENDIX A

AGENCIES

AASHTO: American Association of State Highway and Transportation Officials
ASTM: American Society for Testing and Materials
ISSA: International Slurry Surfacing Association

TEST METHODS

EMULSIFIED ASPHALT

AASHTO TEST NO.	ASTM TEST NO.	TEST
M 140	D 977	Standard Specification for Emulsified Asphalt
M 208	D 2397	Specification for Cationic Emulsified Asphalt
T 40	D 140	Sampling Bituminous Materials
T 59	D 244	Test Methods and Practices for Emulsified Asphalts
T 59	D 6997	Distillation of Emulsified Asphalt

AGGREGATE AND MINERAL FILLER

AASHTO TEST NO.	ASTM TEST NO.	TEST
T 176	D 2419	Sand Equivalent Value of Soils and Fine Aggregate
T 104	C 88	Soundness of Aggregates by Use of Sodium Sulfate or Magnesium Sulfate
96	C 131	Resistance to Degradation of Small-Size Coarse Aggregate by Abrasion and Impact in the Los Angeles Machine (This test should be performed on the parent rock that is used for crushing the finer gradation Micro Surfacing material.)
T 27	C 136	Sieve Analysis of Fine and Coarse Aggregates
T 11	C 117	Test Method for Materials Finer than 75µm (No. 200) Sieve in Mineral Aggregates by Washing
T 2	D 75	Sampling Aggregates
M 17	D 242	Mineral Filler for Bituminous Paving Mixtures
T 19	C 29	Bulk Density (“Unit Weight”) and Voids in Aggregate

APPENDIX A

TEST METHODS (CONTINUED)

SLURRY SEAL SYSTEM

ISSA TEST NO.	Test
TB 100	Test Method for Wet Track Abrasion of Slurry Surfaces
TB 101	Guide for Sampling Slurry Mix for Extraction Test
TB 106	Measurement of Slurry Seal Consistency
TB 109	Test Method for Measurement of Excess Asphalt in Bituminous Mixtures by Use of a Loaded-Wheel Tester
TB 111	Outline Guide Design Procedure for Slurry Seal
TB 112	Method of Estimate Slurry Seal Spread Rates and To Measure Pavement Macrotexture
TB 113	Trial Mix Procedure for Slurry Seal Design
TB 114	Wet Stripping Test for Cured Slurry Seal Mixes
TB 115	Determination of Slurry Seal Compatibility
TB 139	Method of Classified Emulsified Asphalt, Aggregate Mixtures by Modified Cohesion Test Measurement of Set and Cure Characteristics
A105	Design, Testing, and Construction of Slurry Seal

Notes:

ASTM D 3910, Standard Practice for Design, Testing, and Construction of Slurry Seal, is a combined reference of the ISSA Test Bulletins listed above.

ASTM D 2172, Standard Test Methods for Quantitative Extraction of Bitumen From Bituminous Paving Mixtures, is referenced in Section 12.3.

END OF SECTION

SPECIAL PROVISIONS

SECTION K – Crack Seal

P21067 10th and N Sewer Upgrade – Phase 2

K1. General

CONTRACTOR shall follow manufacturer's recommendations for product application. See Bid Item 0096 Crack Seal in Special Provision Section C for more information.

K2. Procedure

A. Use a street sweeper to remove heavy accumulations of dirt or debris prior to the sealing process and to the satisfaction of the ENGINEER.

B. Establish a safety zone by proper traffic cones and barricade placement on high traffic volume streets, a flagger may be required. Submit a Temporary Traffic Control Plan to the City for approval prior to starting work.

C. Notify residents a minimum of 2-days prior to starting work about detours and road closures.

D. Clean cracks with propane/compressed air hot lance.

E. Fill cracks with hot liquid crack sealing material.

F. Squeegee excess crack sealing material flush with street surface.

Note: CONTRACTOR to schedule a test section of Crack Sealing with the inspector prior to starting work.

END OF SECTION

STANDARD CURB & GUTTER

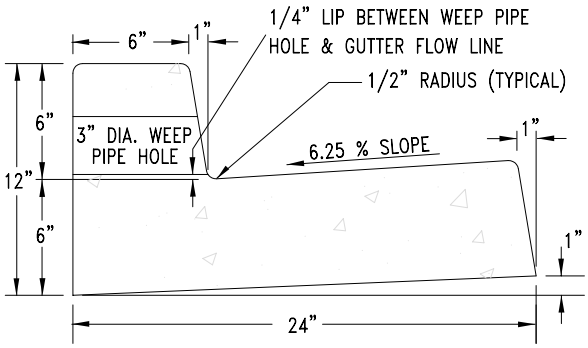

MOUNTABLE CURB & GUTTER

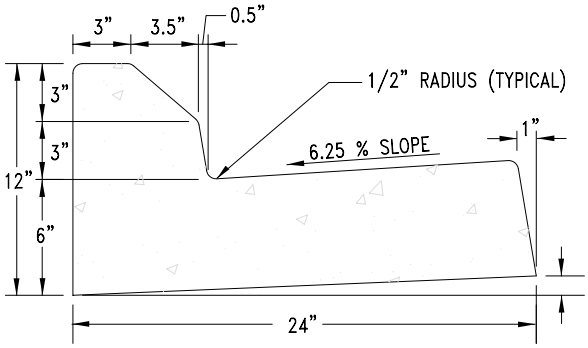

EXTRUDED CURB

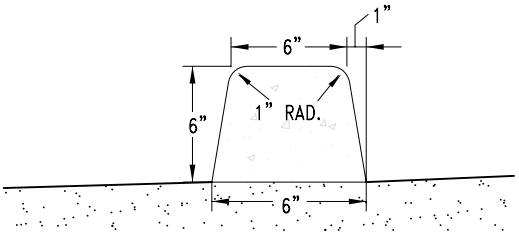

FULL DEPTH CURB

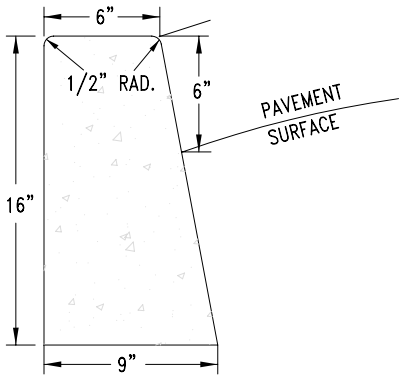

WEEP HOLES SHALL BE PLACED AT 75' O.C. OR AS OTHERWISE SPECIFIED REFER TO STD DWG. 3-XX FOR INSTALLATION DETAILS. IN NEW CONSTRUCTION, PLACE CONTRACTION JOINT OVER & IN FRONT OF PIPE

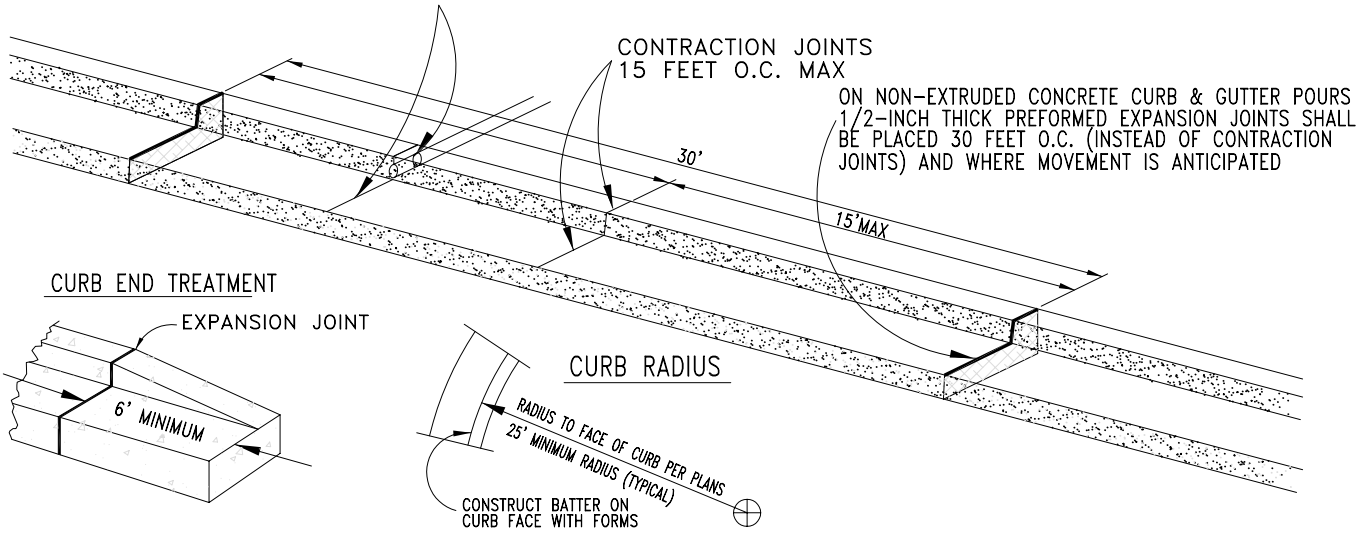

NOTES

* WHERE CONCRETE PAVEMENT WILL BE USED, CONTRACTION JOINTS SHALL BE PLACED TO MATCH TRANSVERSE CONTRACTION JOINT LOCATIONS IN STREET PAVEMENT AND 24" #5 REBAR TIE BARS SHALL BE PLACED IN GREEN CONCRETE.
* CURB AND GUTTER SURFACES SHALL HAVE A BROOM FINISH PARALLEL TO THE LENGTH OF THE CURB
* SIDEWALKS, ACCESS RAMPS, AND RESIDENTIAL DRIVEWAYS SHALL BE 3000 PSI FIELD STRENGTH (3450 PSI LAB STRENGTH) 6.0 SACK MIX CONCRETE
* CURBS & COMMERCIAL DRIVEWAYS SHALL BE 3500 PSI FIELD STRENGTH (4025 PSI LAB STRENGTH) 6.3 SACK MIX CONCRETE

NO	REVISION	DATE	BY	APPR.

CITY OF SPRINGFIELD
SPRINGFIELD
DEPT. OF PUBLIC WORKS

CURB & GUTTER

Al Peroutka City Engineer 2003

STANDARD DRAWING
3-5
2003

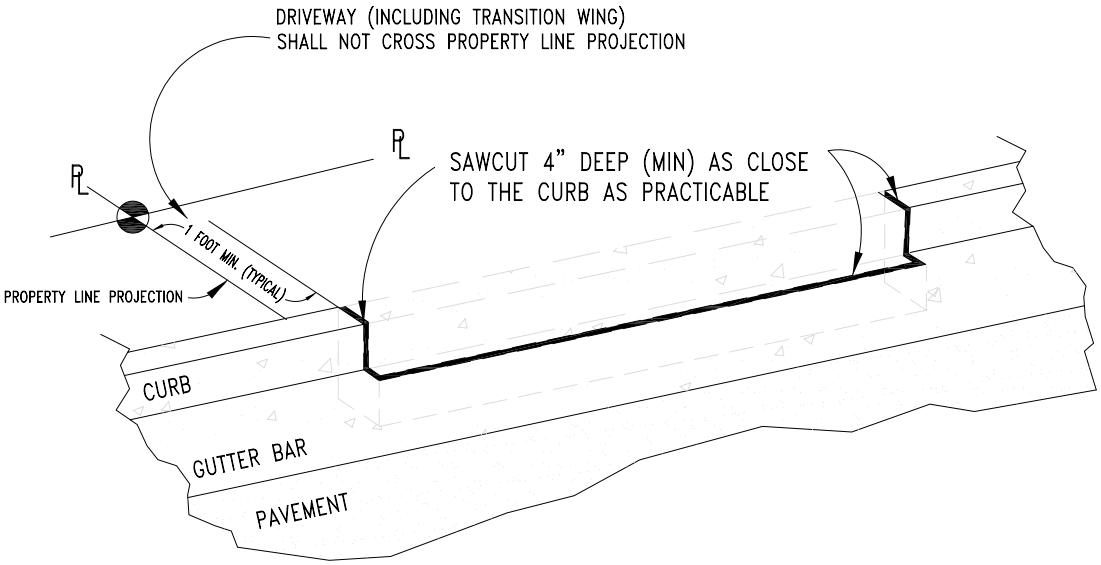

CURB REMOVAL
FOR DRIVEWAY OR RAMP PLACEMENT

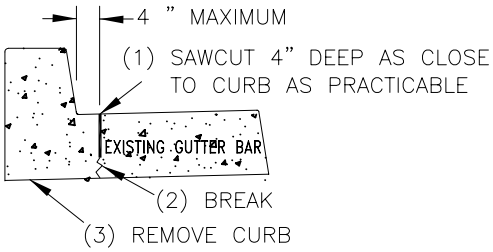

CURB REPLACEMENT
WITH STANDARD CURB

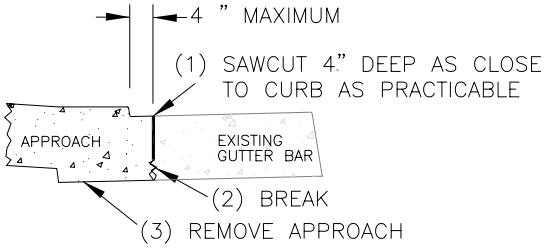

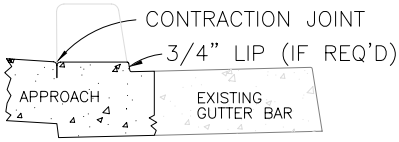

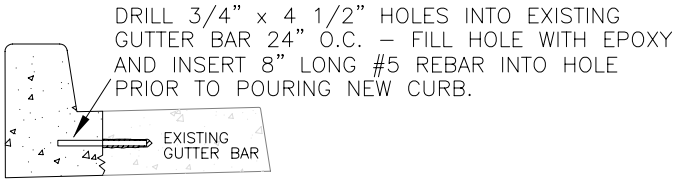

NOTES

* EXISTING GUTTER BAR SHALL NOT BE REMOVED WITHOUT PRIOR APPROVAL BY THE CITY
* CURB CUT WIDTH SHALL BE IN ACCORDANCE WITH PERMIT
* ALTERNATIVELY, CURB CUTS MAY BE SAWED USING THE "PRECISION CUT" METHOD OR EQUIVALENT
* SIDEWALKS, ACCESS RAMPS, AND RESIDENTIAL DRIVEWAYS SHALL BE 3000 PSI FIELD STRENGTH (3450 PSI LAB STRENGTH) 6.0 SACK MIX CONCRETE
* CURBS & COMMERCIAL DRIVEWAYS SHALL BE 3500 PSI FIELD STRENGTH (4025 PSI LAB STRENGTH) 6.3 SACK MIX CONCRETE

NO	REVISION	DATE	BY	APPR.

CITY OF SPRINGFIELD
SPRINGFIELD
DEPT. OF PUBLIC WORKS

CURB
REMOVAL & REPLACEMENT

Al Peroutka City Engineer 2003

STANDARD DRAWING
3-7
2003

DO NOT USE THIS DETAIL FOR STANDARD CURB REMOVAL
REFER TO STANDARD DRAWING 3-7

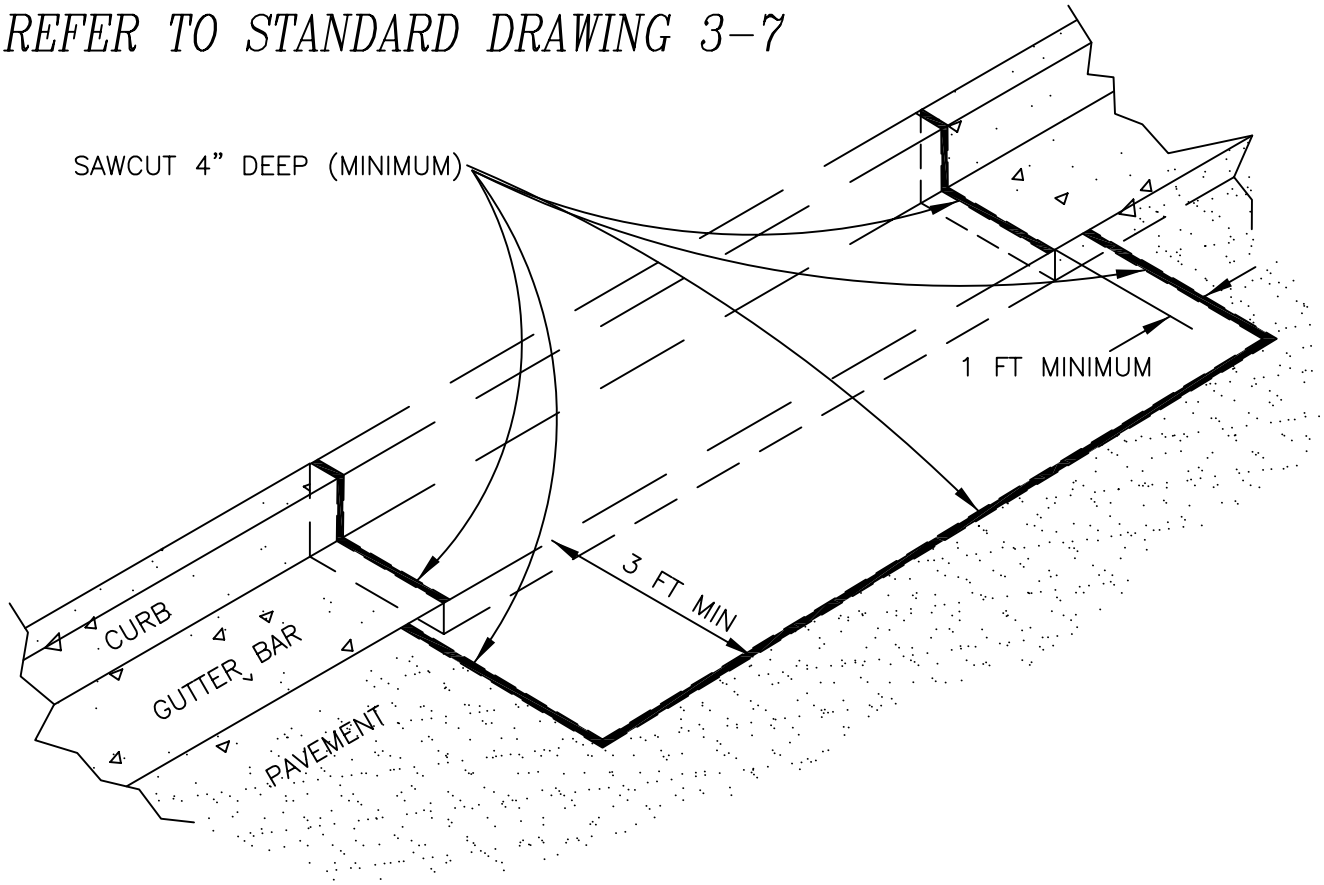

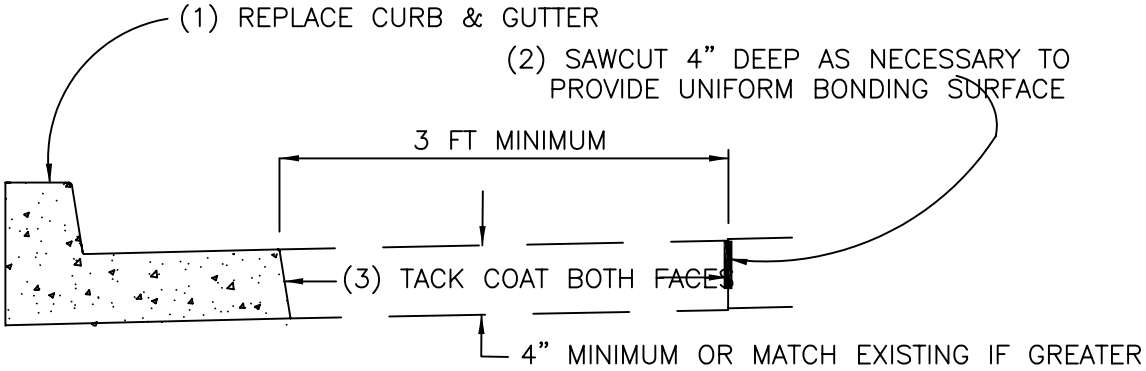

(4) PLACE HOT MIX ASPHALT AND USE MECHANICAL COMPACTION EQUIPMENT TO ACHIEVE REQUIRED DENSITY

(5) SEAL ALL JOINTS WITH POLYMERIZED ASPHALT AND SAND TO AVOID PICKUP

NOTES

* EXISTING GUTTER BAR SHALL NOT BE REMOVED WITHOUT PRIOR APPROVAL BY THE CITY
* CURB CUT WIDTH SHALL BE IN ACCORDANCE WITH PERMIT
* REFER TO SPRINGFIELD STANDARD SPECIFICATIONS FOR ROADWAY STRUCTURE COMPACTION REQUIREMENTS
* SIDEWALKS, ACCESS RAMPS, AND RESIDENTIAL DRIVEWAYS SHALL BE 3000 PSI FIELD STRENGTH (3450 PSI LAB STRENGTH) 6.0 SACK MIX CONCRETE
* CURBS & COMMERCIAL DRIVEWAYS SHALL BE 3500 PSI FIELD STRENGTH (4025 PSI LAB STRENGTH) 6.3 SACK MIX CONCRETE

NO	REVISION	DATE	BY	APPR.

CITY OF SPRINGFIELD
SPRINGFIELD
DEPT. OF PUBLIC WORKS

CURB & GUTTER
REMOVAL & REPLACEMENT

Al Peroutka City Engineer 2003

STANDARD DRAWING
3-8
2003

DETAIL 1
CONTRACTION JOINT TRANSVERSE OR LONGITUDINAL

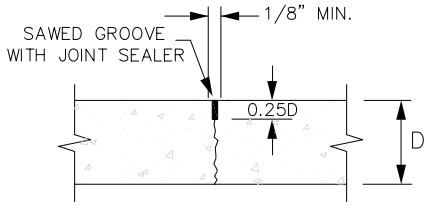

DETAIL 2
TIED CONTRACTION JOINT PAVEMENT TO CURB & GUTTER

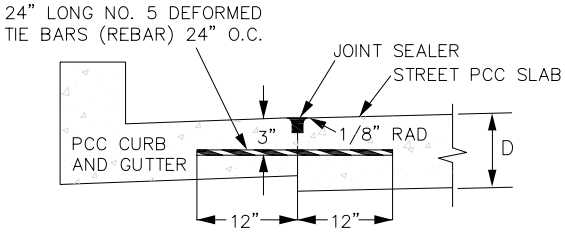

DETAIL 3
LONGITUDINAL CONSTRUCTION JOINT

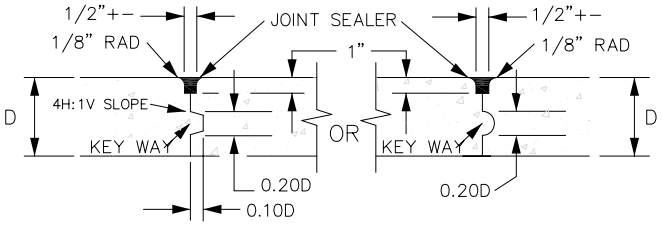

DETAIL 4
TRANSVERSE CONTRACTION JOINT

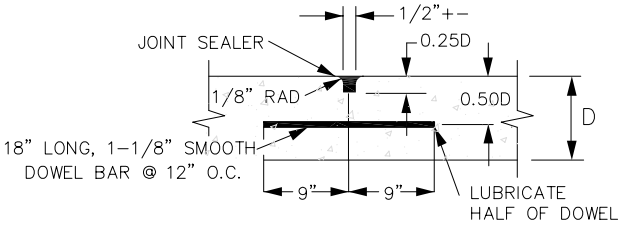

DETAIL 5
THICKENED EDGE EXPANSION JOINT CONCRETE TO ASPHALT PAVEMENT TRANSITION

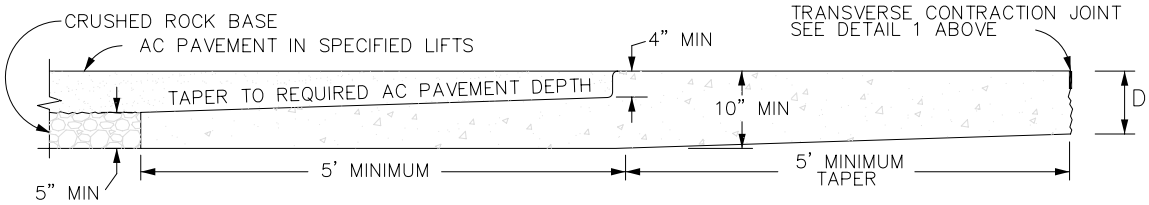

NOTES

* " D " IS THE DEPTH OF THE CONCRETE PAVEMENT AS SHOWN ON THE PLANS OR SPECIFIED IN THE CONSTRUCTION DOCUMENTS
* JOINTING AND PAVEMENT STRENGTH SHALL BE IN ACCORDANCE WITH THE PLANS AND CONTRACTION DOCUMENTS.
* THE CITY CONSTRUCTION INSPECTOR MAY ADJUST JOINTING AS NECESSARY IN THE FIELD.

NO	REVISION	DATE	BY	APPR.

CITY OF SPRINGFIELD
SPRINGFIELD
DEPT. OF PUBLIC WORKS

CONCRETE PAVEMENT
JOINTING DETAILS

Al Peroutka City Engineer 2003

STANDARD DRAWING
3-9
2003

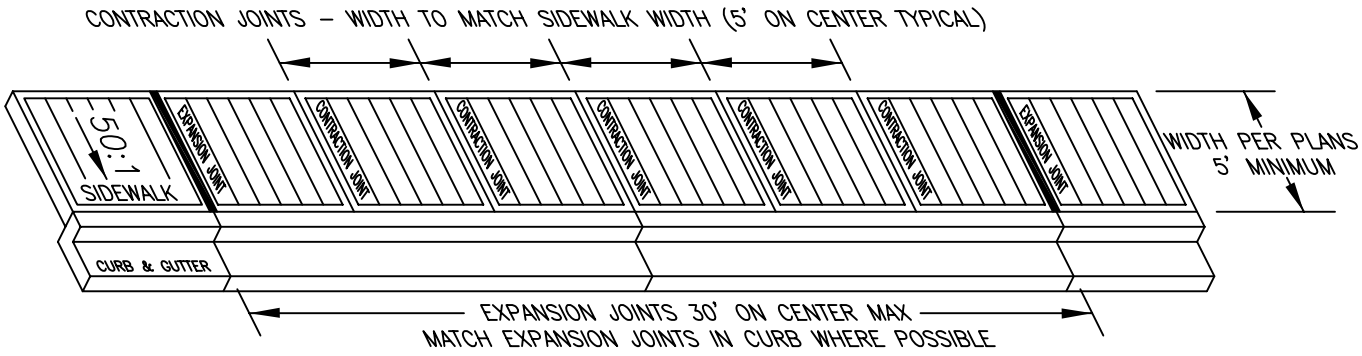

CURBSIDE SIDEWALK

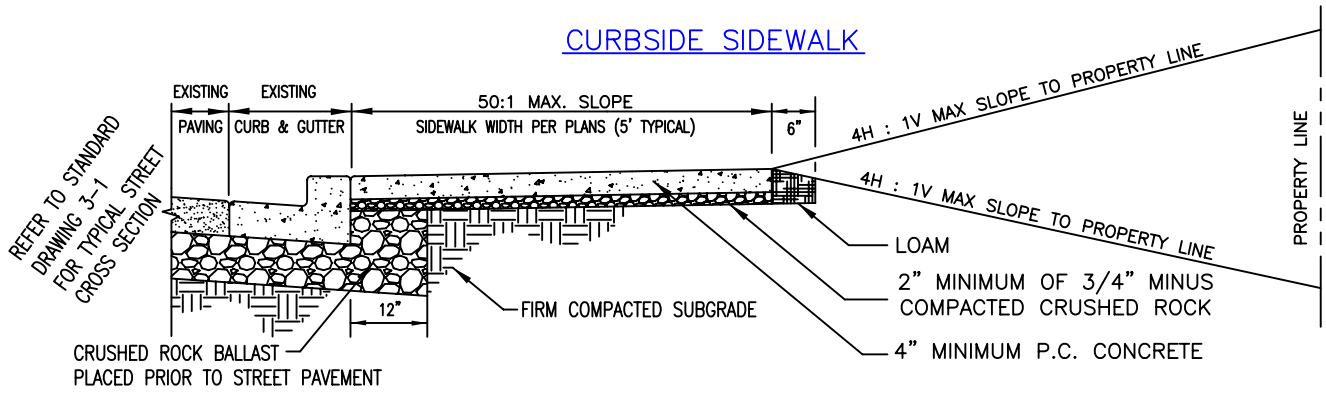

SETBACK SIDEWALK

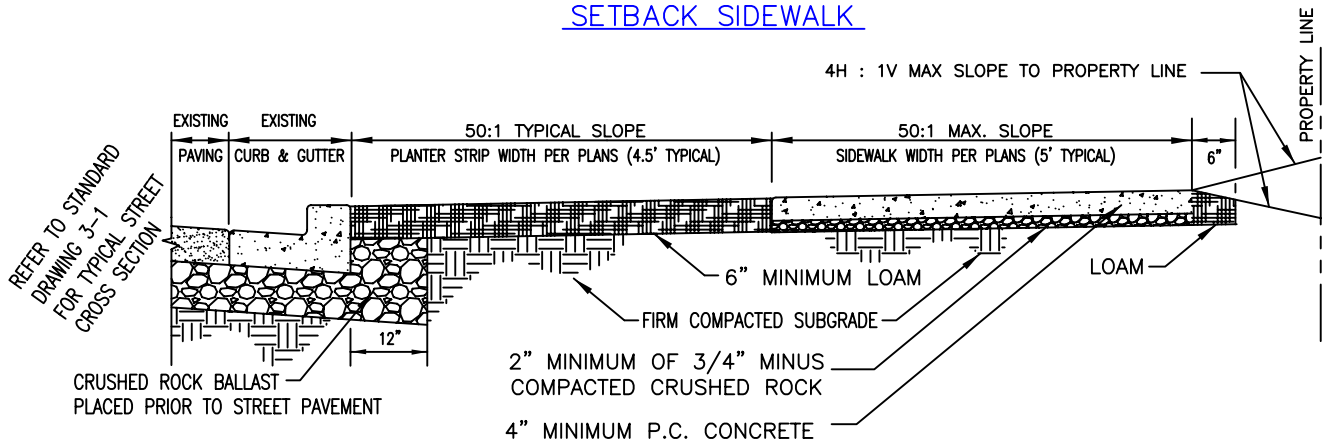

NOTES

* NO ABOVEGROUND FACILITIES (FIRE HYDRANTS, POWER POLES, CATCH BASINS, VALVES, J-BOXES, ETC.) SHALL BE PERMITTED WITHIN THE SIDEWALK AREA
* ALL SURFACES SHALL HAVE A BROOM FINISH.
* SIDEWALKS, ACCESS RAMPS, AND RESIDENTIAL DRIVEWAYS SHALL BE 3000 PSI FIELD STRENGTH (3450 PSI LAB STRENGTH) 6.0 SACK MIX CONCRETE
* CURBS & COMMERCIAL DRIVEWAYS SHALL BE 3500 PSI FIELD STRENGTH (4025 PSI LAB STRENGTH) 6.3 SACK MIX CONCRETE

NO	REVISION	DATE	BY	APPR.

CITY OF SPRINGFIELD
SPRINGFIELD
DEPT. OF PUBLIC WORKS

SIDEWALK CONSTRUCTION

Al Peroutka City Engineer 2003

STANDARD DRAWING
3-12
2003

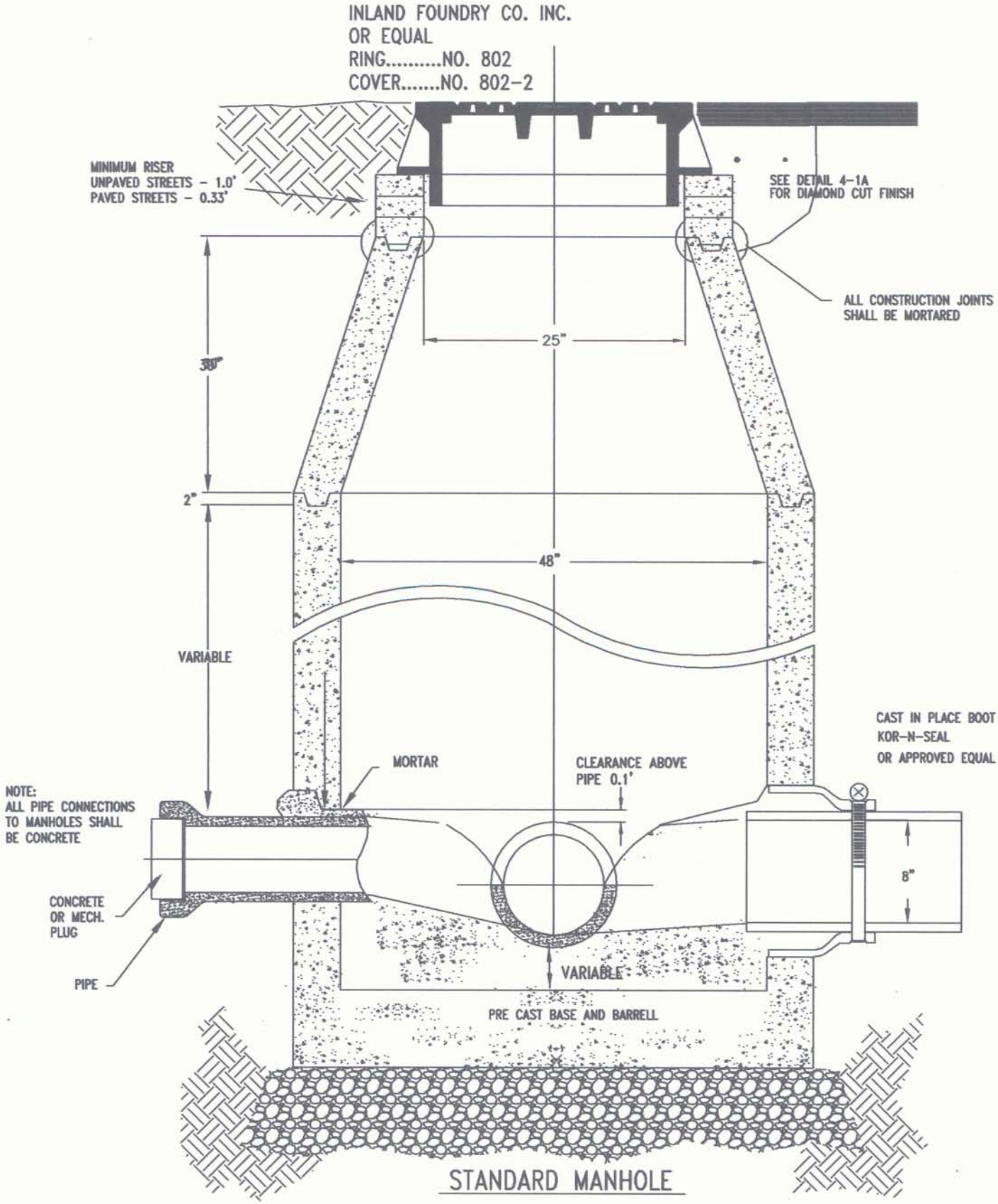

STANDARD MANHOLE

NO	REVISION	DATE	BY	APPR.

CITY OF SPRINGFIELD
SPRINGFIELD
DEPT. OF PUBLIC WORKS

STANDARD MANHOLE

Ken Vogeney
Ken Vogeney City Engineer 2006

STANDARD DRAWING
4-1
2006

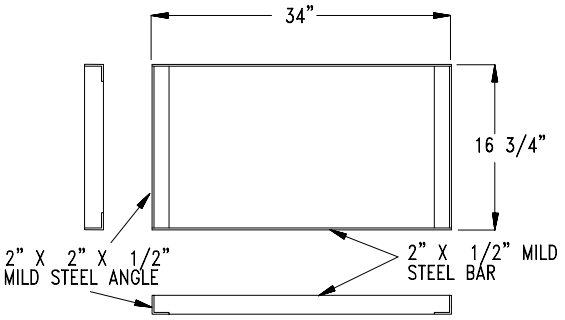

FABRICATED STEEL FRAME

"BICYCLE PROOF"
GRATE FRAME
AS APPROVED BY ENGINEER.

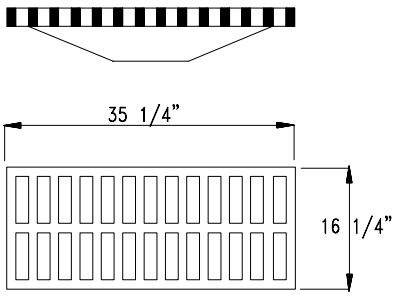

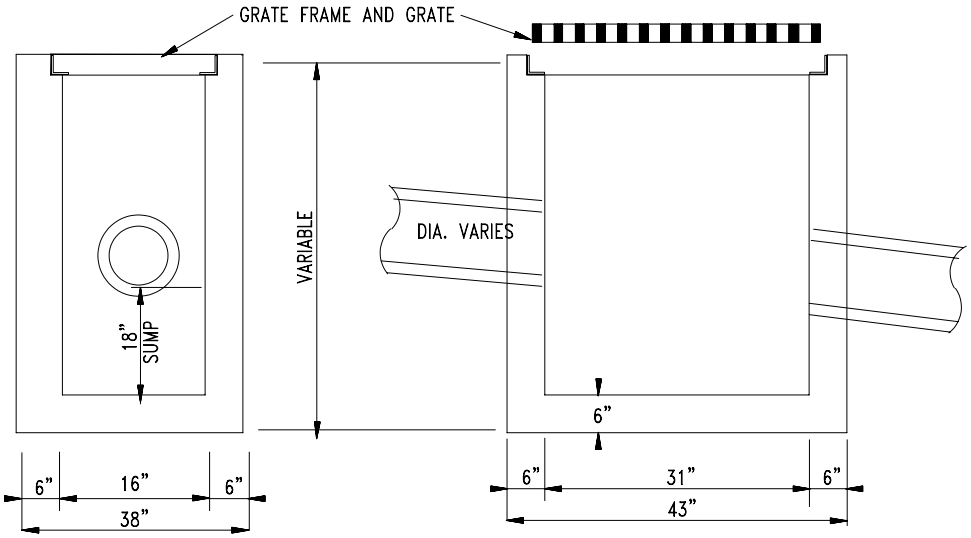

AREA DRAIN CATCH BASIN

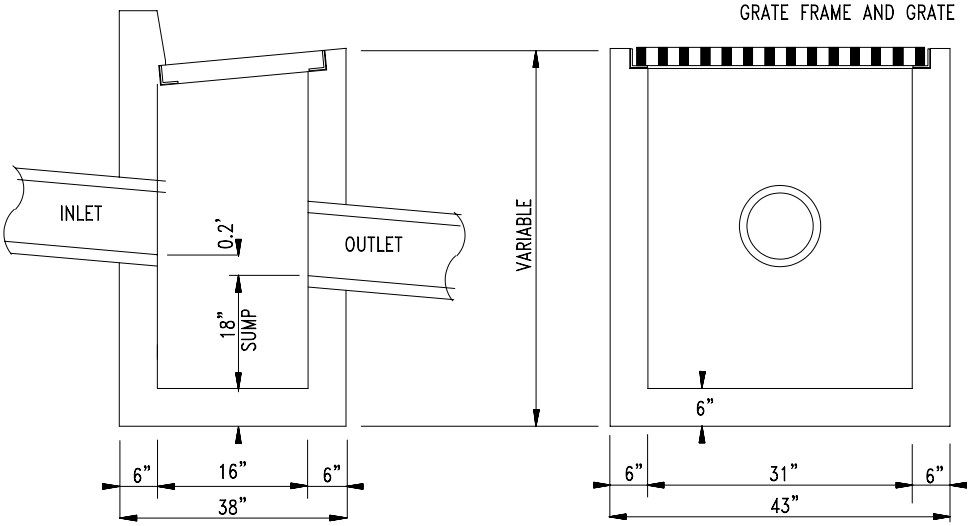

STREET DRAIN CATCH BASIN

NO	REVISION	DATE	BY	APPR.

CITY OF SPRINGFIELD
DEPT. OF PUBLIC WORKS

225 FIFTH STREET
SPRINGFIELD, OR. 97477

CATCH BASIN

STANDARD DRAWING

4-11

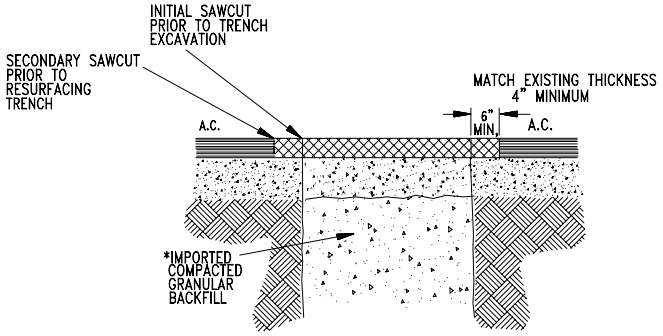

T – A
ASPHALT PAVED STREETS

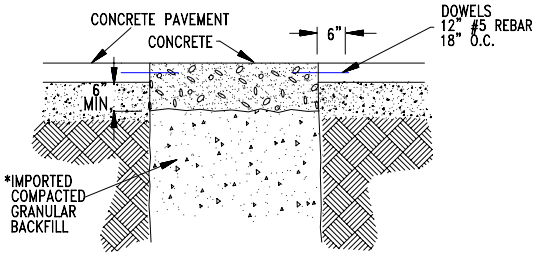

*CUTS CROSSING THE STREET OR WITHIN THE TRAVEL LANES MUST BE BACKFILLED WITH CONTROLLED DENSITY FILL (CDF)

T – B
CONCRETE PAVED STREETS

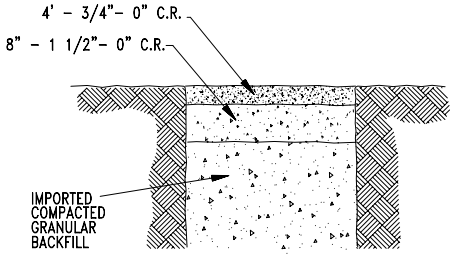

T – C
UNPAVED STREETS AND ALLEYS

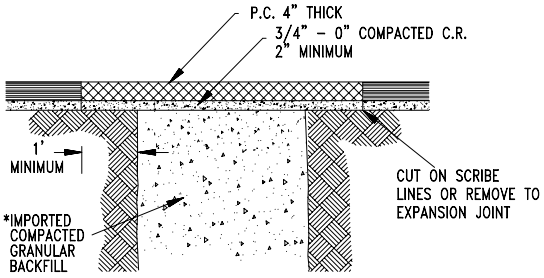

T – D
SIDEWALK AREAS

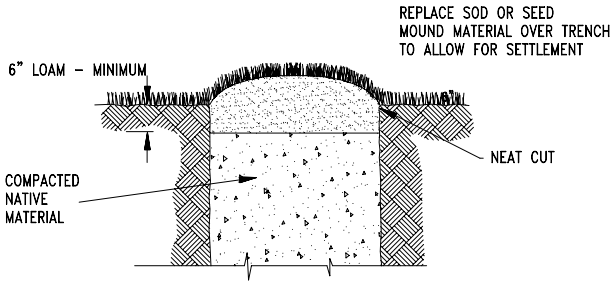

T – E
UNTRAVELED AREAS (LAWN)

NOTES:

1 ALL A.C. AND P.C. SURFACES SHALL BE SAWCUT
2 GRANULAR MATERIAL AS DIRECTED BY THE ENGINEER
3 CONSTRUCT PIPE BEDDING AS SHOWN ON STD. DWG. 4–1
4 SEE SPECIFICATIONS, SECTION 405, BACKFILL: NATIVE AND IMPORTED

NO	REVISION	DATE	BY	APPR.

CITY OF SPRINGFIELD
DEPT. OF PUBLIC WORKS

225 FIFTH STREET
SPRINGFIELD, OR. 97477

SURFACE RESTORATION OVER TRENCH EXCAVATION

STANDARD DRAWING

4–16

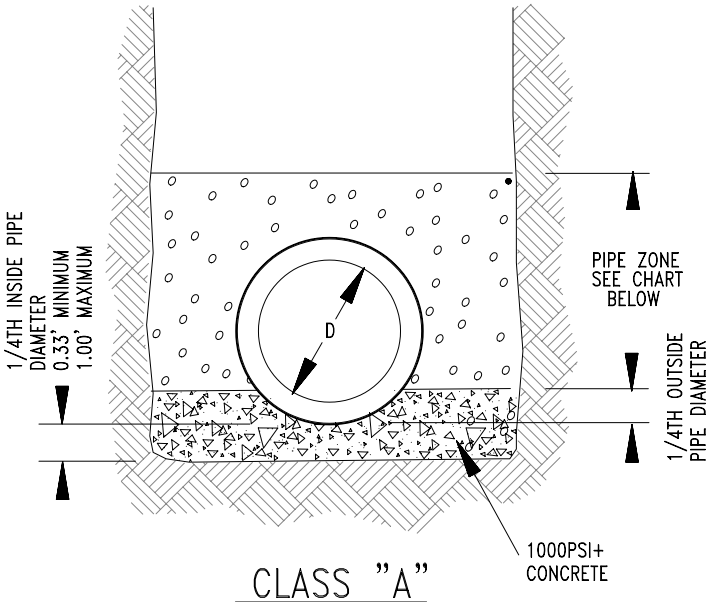

CLASS "A"

LOAD FACTOR 3.0

PIPE ZONE MATERIAL SHALL BE:

SANITARY SEWER	STORM SEWER
TIGHT JOINT PIPE PLASTIC PIPE	OPEN JOINTED PIPE PERFORATED PIPE
PEA ROCK BLEND SAND CRUSHED ROCK	ROUND ROCK (PEA ROCK) 3/8" MIN. DIAMETER 3/4" MAX. DIAMETER

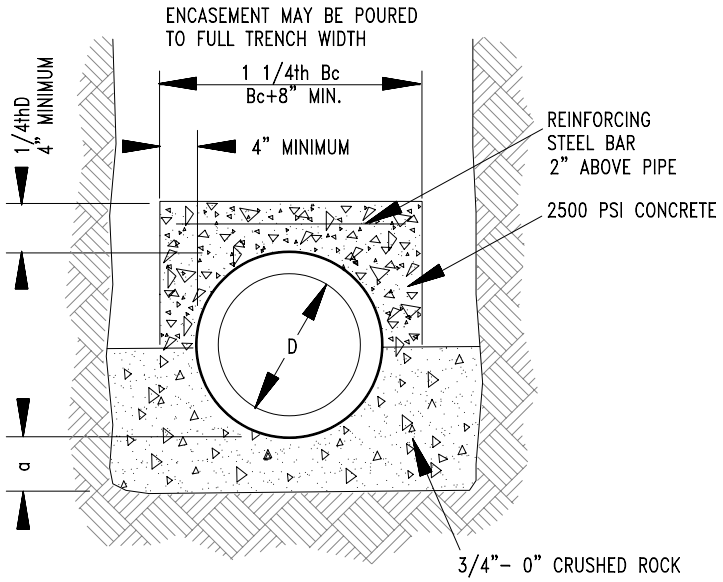

LOAD FACTORS

REINFORCED P = 1.00% - 4.8
REINFORCED P = 0.40% - 3.4
PLAIN 2.8

CLASS "B"

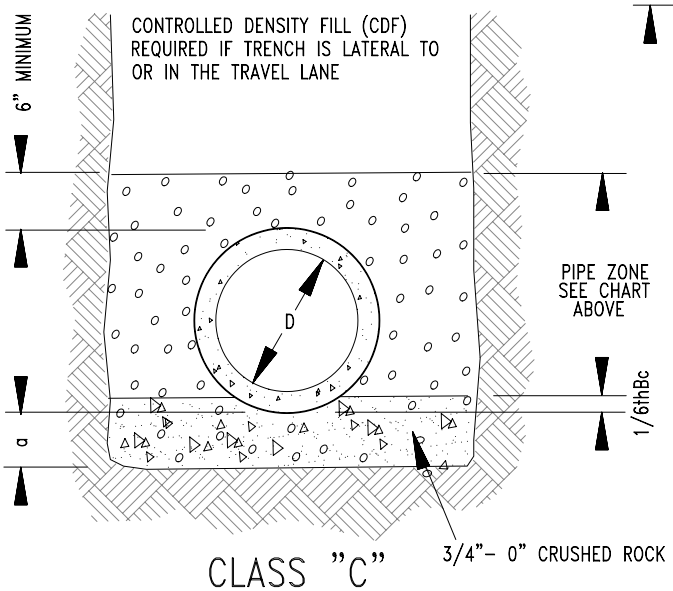

CLASS "C"

Bc - OUTSIDE DIAMETER OF PIPE
D - NOMINAL PIPE SIZE
a - FILL BELOW PIPE (SEE TABLE)
P - AREA OF TRANSVERSE STEEL IN THE CRADLE OR ARCH EXPRESSED AS A PERCENTAGE OF AREA OF CONCRETE AT INVERT OR CROWN.

TABLE OF FILL DEPTH BELOW PIPE	
D	a MINIMUM
0 - 27"	3"
30" - 60"	4"
66" +	6"

NO	REVISION	DATE	BY	APPR.

FILE: A.DWG

CITY OF SPRINGFIELD
DEPT. OF PUBLIC WORKS

225 FIFTH STREET
SPRINGFIELD, OR. 97477

TYPICAL PIPE ZONE AND PIPE BEDDING

STANDARD DRAWING

4-17

REMOVABLE

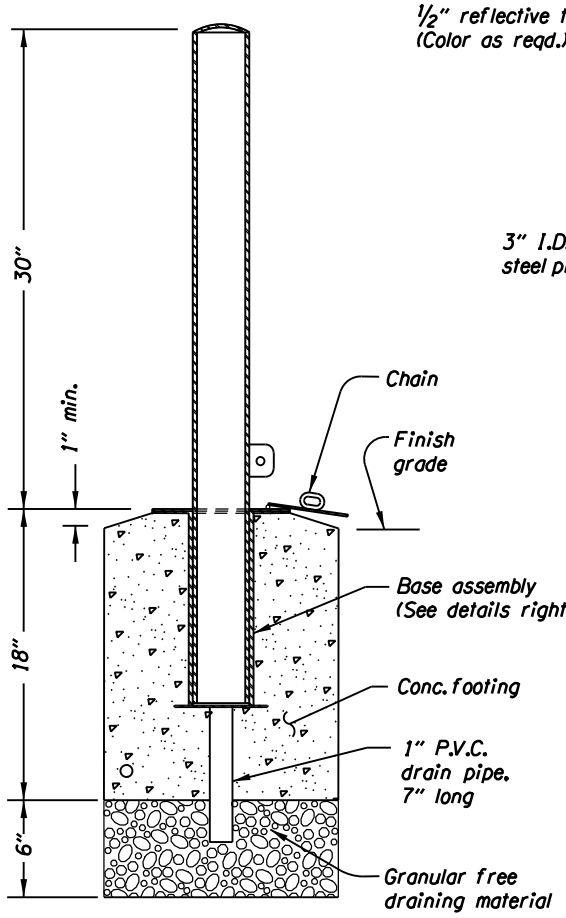

SECTION A-A

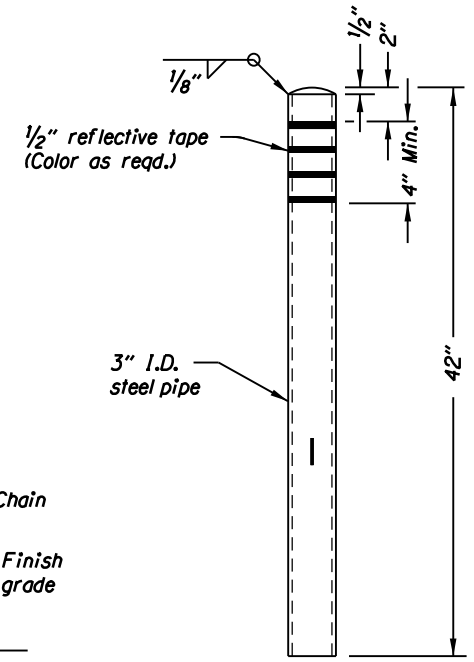

FRONT VIEW

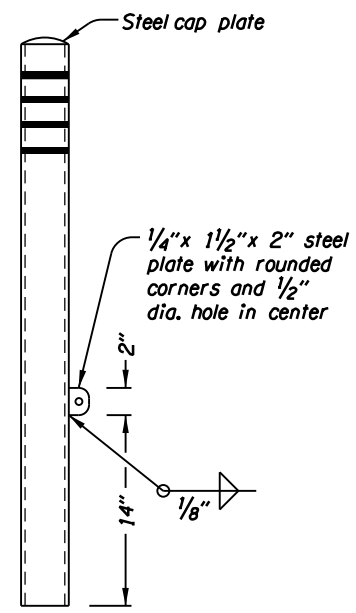

SIDE VIEW

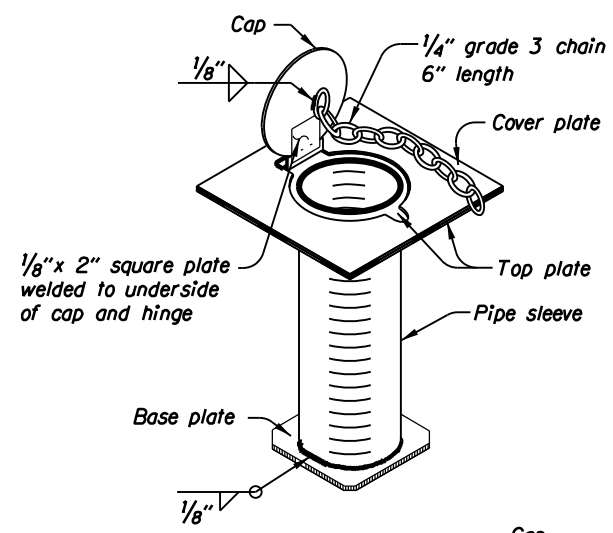

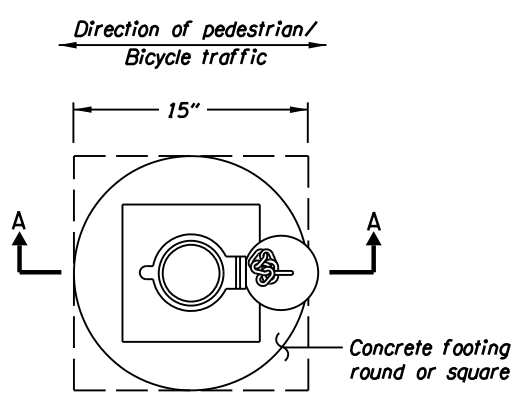

PLAN

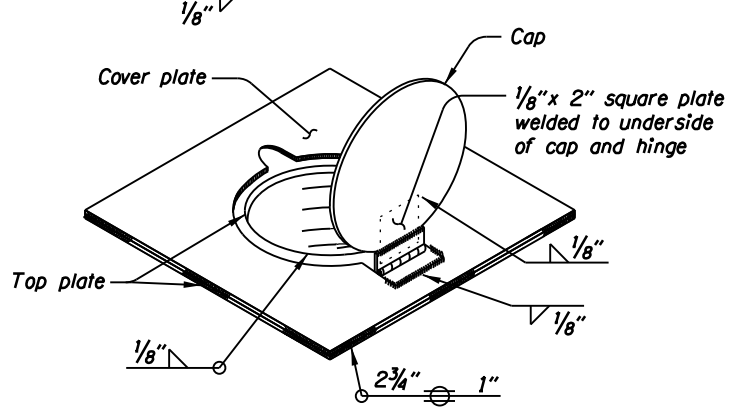

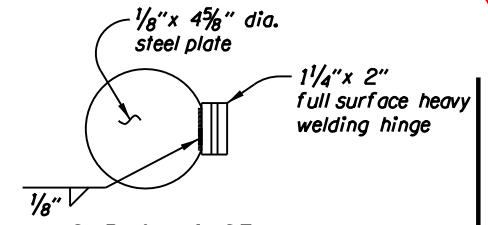

CAP & HINGE

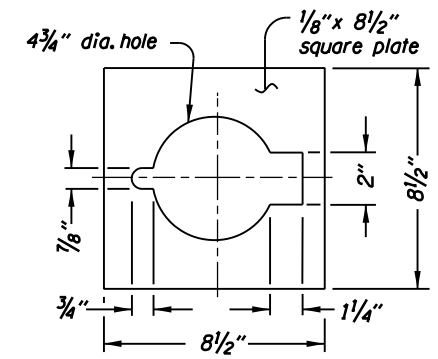

COVER PLATE

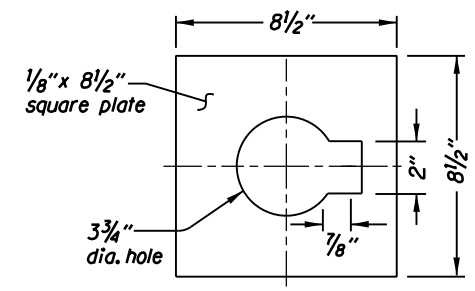

TOP PLATE

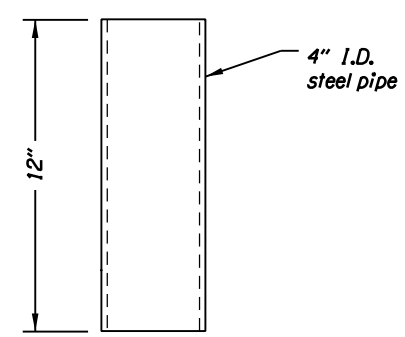

PIPE SLEEVE

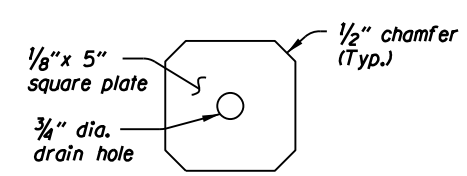

BASE PLATE

BASE ASSEMBLY

NON-REMOVABLE

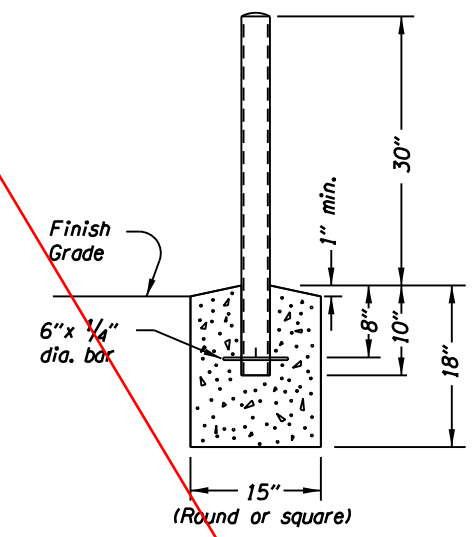

SECTION B-B

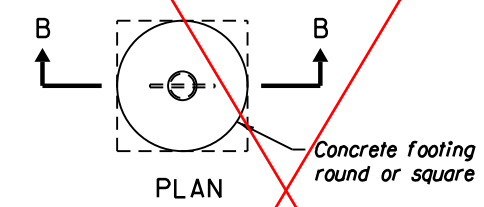

PLAN

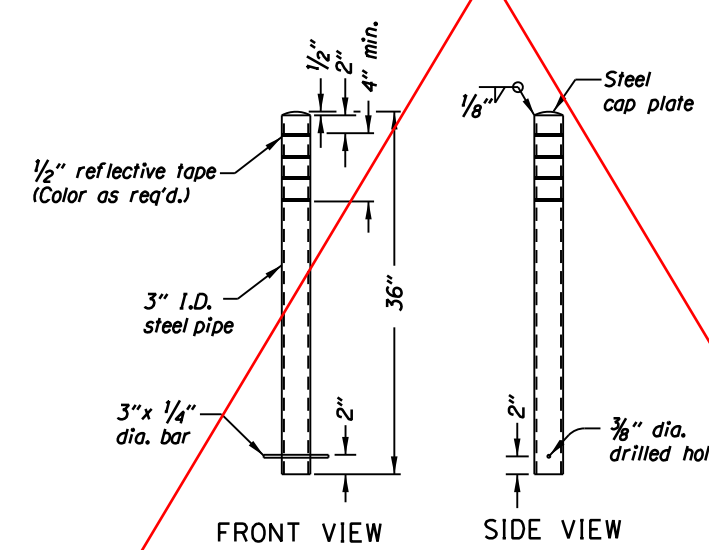

FRONT VIEW

SIDE VIEW

Not In Contract

The selection and use of this detail, while designed in accordance with generally accepted engineering principles and practices, is the sole responsibility of the user and should not be used without consulting a Registered Professional Engineer.

OREGON DEPARTMENT OF TRANSPORTATION
TECHNICAL SERVICES
DETAILS

BOLLARDS

DETAIL NO. DET1710

det1710.dgn 03-JUL-2013

DET1710

SECTION _____
HEAVY DUTY STOP LOGS

PART 1 GENERAL

1.01 SUMMARY

A. This Section includes all Stop Log systems required for the complete installation of the work.

1.02 REFERENCES

A. Design, fabricate and test stop log systems and materials in accordance with manufacturer's recommended procedures and the following codes and standards:

1.	ASTM A193	-	Stainless Steel Anchor Bolts
2.	ASTM A276	-	Stainless Steel Bars
3.	ASTM B584	-	Alloy 865 Manganese Bronze
4.	ASTM D256	-	Izod Impact Strength
5.	ASTM D570	-	Water Absorption Rate
6.	ASTM D638	-	Tensile Strength
7.	ASTM D695	-	Compressive Properties of Rigid Plastic
8.	ASTM D696	-	Coefficient of Linear Expansion
9.	ASTM D790	-	Flexural Properties
10.	ASTM D792	-	Density and Specific Gravity at 23^0 C
11.	ASTM D1056	-	Polymer Grade
12.	ASTM D2583	-	Indentation Hardness
13.	ASTM D2563-0	-	Visual Defects
14.	ASTM D2584	-	Resin, Glass & Filler Content
15.	AWWA C-563	-	Leakage Rate
16.	NSF-61	-	Potable Water

B. Composition of the stop log laminate shall be in accordance with the recommendations shown in the Quality Assurance Report for Reinforced Thermoset Plastic (RTP) Corrosion Resistant Equipment prepared under the sponsorship of the Society of the Plastics Industry, Inc. (SPI), and the Material Technology Institute (MTI) of the Chemical Process Industry for "Hand Lay-UP Laminates," and shall meet the specifications for Type I, Grade 10 laminates shown in Appendix M-1 of said report.

C. Manufacturer shall be experienced in the design and manufacture of specific valves and accessories for a minimum period of 20 years.

D. Manufacturer must provide warranty for 25 years against corrosion.

1.03 SUBMITTALS

A. Submit the following for acceptance:
   1. Approval Drawings
      a. Showing all critical dimensions.
      b. Showing principal parts and materials.
   2. Spare parts list (when applicable).

1.04 DELIVERY, STORAGE AND HANDLING

A. Ship all stop logs with suitable packaging to protect products from damage.
B. Protect stop logs, lifting pins, guide frames, lifting devices and storage racks from damage.

PART 2 PRODUCTS

2.01 MATERIALS

A. Stop log panels shall be:
   1. Engineered composite fiberglass reinforced plastic (FRP) completely encapsulating an internal steel reinforcing structure.
      a. Infusion molded to create a seamless corrosion barrier impervious to moisture.
      b. FRP resin shall be *polyester / vinyl ester*.
      c. Internal Steel Reinforcing: Carbon Steel as needed for deflection requirements.
      d. Sandwich design for superior strength.
      e. Foam core between steel reinforcing.
B. Guide Frames
   1. Guide Frame Rails to be: *vinyl ester resin FRP* / *T-304L / T-316L / PREN __ super duplex stainless steel*.
C. Lifting *Pins/Eyes*
   1. Lifting *Pins/Eyes* to be: Type *T-304L / T-316L / PREN __ super duplex stainless steel.*
D. Anchor Bolts (when applicable)
   1. Anchor Bolts to be: Type *T-304L / T-316L / PREN __ super duplex stainless steel.*
E. Lifting *Beam/Poles*
   1. Lifting *Beam/Poles* to be: Type *T-304L / T-316L / PREN __ super duplex stainless steel.*
F. Storage Racks
   1. Storage Racks to be: Type *T-304L / T-316L / PREN __ super duplex stainless steel.*

2.02 STOP LOGS

A. Acceptable Manufacturers:
   1. Plasti-Fab Inc
      a. Shall be Model HDSL *XXXX (width x height of channel).*
   2. Or approved equal. Pre-approved by Engineer at least 10 business days prior to bid date.
      a. Manufacturer must have a qualified Engineer on staff with at least 5 years experience with hydraulic control stop logs.

B. Stop Log systems shall exceed AWWA C-563:
   1. Leakage:

      Maximum allowable leakage of stop logs with seating head shall not exceed 0.10 GPM/ft (1.24 LPM/m) of wetted linear seal area under full design head when installed in manufacturer's Guide Frames.

2.03 DESIGN CRITERIA

A. Composition of the stop log laminate shall be in accordance with the recommendations shown in the Quality Assurance Report for Reinforced Thermostat Plastic (RTP) Corrosion Resistant Equipment prepared under the sponsorship the Society of the Plastics Industry, Inc. (SPI) and the Material Technology Institute of the Chemical Process Industries, Inc. (MTI) for "Hand Lay-up Laminates" and shall meet the specifications for Type 1, Grade 10 laminates shown in Appendix M-1 of said report.

1. Visual inspection for defects shall be made without the aid of magnification and defects shall be classified as to type and level as shown in Table 1 of ANSI/ASTM D2563-0, approved 1977, (or any subsequent revision). Allowable surface tolerances are as follows:

DEFECTS	ALLOWABLE TOLERANCE
Cracks Crazing Blisters Chips Pits Dry Spots Fish Eyes Burned Areas Entrapped Air	None
Wrinkles and solid blisters, not to exceed 1/8"	Maximum Deviation: 10% of thickness, but not to exceed 1/8 inch (0.3mm)
Surface porosity (pinholes or pores in the laminate surface)	None
Exposed Glass Exposure of cut edges	None
Scratches	None more than .002" deep (.05mm)
Foreign Matter	None

B. Maximum Fiber Stress

1. Ultimate or yield, whichever applies, does not exceed 2.5 times the working stress.

C. Deflection

1. Deflection across the stop log width shall be limited to: L/360 or ¼" (6mm), whichever is less, at the maximum operating head.

D. Head Pressure

1. Stop log system shall be designed for a maximum head pressure of: _____ *inches / millimeters.*

E. Stop log panel Size

1. Channel Width: _____ *inches / millimeters.*
2. Stop Log System Height (max fluid level): _____ *inches / millimeters.*
3. Channel Invert Elevation: _____ *inches / millimeters.*
4. Top of Wall Elevation: _____ *inches / millimeters.*
5. Number of Stop Log Panels __, Panel Height ___ *inches / millimeters.*

F. Surface Conditions

1. All stop log panels shall be flat and level.
2. Warpage throughout the entire stop log panel shall not produce a crown of more than 1/16" (1.6mm) in any direction.

2.04 CONSTRUCTION

A. Stop Log Panels

1. The stop log shall be fabricated by means of vacuum infusion so as to totally encapsulate the internal structural matrix and protect it against corrosion from moisture or chemical deterioration with a minimum thickness of ¼ inch (6mm) FRP on the front and back facings, and ¾ inch (19mm) FRP on the remaining perimeter. Stop logs shall be designed so that the maximum fiber stress (ultimate or yield, whichever applies) does not exceed 2.5 times the working stress. Stop logs shall be suitably reinforced to withstand the maximum seating head with a deflection less than ℓ/360 of the stop log width, or ¼ inch (6mm), whichever is less. Stop log covers that are fabricated from pressed or laminated sheet material and/or glued/bonded to a substructure shall not be acceptable. No seams or joints that may delaminate, allow seepage, or provide an avenue to collect debris will be acceptable. Each Stop Log shall be molded individually to the exact dimensions specified.
2. Stop Log shall be manufactured of reinforced thermoset plastic in the form of FRP.
3. Stop Log shall have UV Stabilizing pigment in the Resin to provide long-term protection from UV.
4. The surface shall be resin rich to a depth of .010 inches (2.5mm) to .020 inches (5mm) and reinforced with C-glass or polymeric fiber surfacing material.
5. The surface shall be free of exposed reinforcing fibers.
6. The composition of these layers shall be approximately 95% (by weight) resin. The remaining laminate shall be made up of copolymer composite and reinforcing fibers in a form, orientation and position to meet the mechanical requirements.
7. Structural reinforcing shall be utilized to attain the necessary stiffness to meet deflection requirements, and shall be well encapsulated with a laminate not less than ¼" (6mm) thick on each side to ensure against any permeation by water to the core areas. . Internal steel structure to be welded per ASME/ASTM standards, sandblasted and coated with vinyl ester resin immediately prior to vacuum infusion in order to ensure complete bonding with external corrosion barrier.
8. Type *T-304L / T-316L / PREN __ super duplex stainless steel* lifting pins shall be attached to the Stop Log by passing completely through the log. Stainless steel lifting pin shall be fastened to the log with sufficient reinforcing to withstand the lifting force. Lifting pins assemblies shall pass completely through the stop log, and shall be entirely encapsulated with a minimum thickness of ¼ inch (6mm) of FRP. Lifting pins attached to the surface of the log are not acceptable. The through holes shall not pass through or be in contact with the internal steel reinforcing.
9. Core material must be 100% resistant to decay and attack by fungus and bacteria and be resistant to hydrocarbons.
10. To assure maximum service life, the copolymer composite shall be ultraviolet stabilized and seamless to protect inner structural members from corrosion.
11. Metal, concrete, or wood stop logs subject to corrosion / bacterial breakdown / rot shall not be acceptable alternatives to composite FRP material.

12. Stop Log panels shall be manufactured using advanced technology vacuum infusion resin transfer processes. The closed mold vacuum process must completely evacuate all air from the mold prior to infusing the mold with premium quality resin as specified. The vacuum infusion process must eliminate the potential of air entrapment and/or voids in the matrix of the stop log panel (which cause defects and performance-detracting irregularities) thus producing a finished product that is one-piece, seamless and uniformly impenetrable by fluids eliminating interior corrosion as is produced by techniques that employ adhesives or mechanical fasteners to attach individual panels to a pre-fabricated framework resulting in seams along vertical and horizontal axes of the stop log which create stress-potential areas, portals for fluid infiltration, subsequent de-lamination and product failure due to corrosion.

B. Seals

1. The stop logs shall be equipped with elastomeric bottom seals to seal between the logs. A special labyrinth seal shall also be fastened to the guide to form a watertight joint with the stop logs. Seals shall be made of molded *EPDM / virgin Neoprene*, per ASTM D-2000 having a hardness of 55 – 65 Shore A Durometer, conforming to ASTM D-2000, with a maximum compression set of 25%, and low temperature brittleness to meet suffix F-17 (-40°F/C).

C. Guide Frames

1. Guide frames shall be styled for *embedment / wall mounting / in-channel* mounting as shown on the contract drawings and/or stop log schedule.
2. Guide frames shall be fabricated from *vinyl ester resin FRP* / *T-304L / T-316L / PREN __ super duplex stainless steel* and shall have a slot suitable for mating with the stop log panels.
3. Guides shall be fitted with molded *EPDM / virgin Neoprene / Teflon clad,* per ASTM D-2000 seal having two raised seating points fastened to the guide with a UHMW clamping bar and stainless steel flat head machine screws. Seals shall be on each side of the guide groove.

2.04 PHYSICAL PROPERTIES

A. Structural characteristics for a 1/8" (3mm) glass mat laminate shall meet the following minimum physical properties:

Tensile strength	15,000 psi (1034 ksc)
Flexural Modulus	1,000,000 psi (70307 ksc)
Flexural Strength	20,000 psi (1406 ksc)
Compressive Strength	22,000 psi (1547 ksc)
Impact Strength	9.0 ft-lbs/in. (1.24 kgf.m/25mm)
Water absorption	0.13% (in 24 hours)

B. Seals: Extruded *Virgin Neoprene / EPDM* Seals shall have the following physical characteristics:

Specific Gravity	1.25
Hardness	55 – 65 Shore A Durometer
Tensile Strength	1500 psi min. (0.07ksc)
Elongation	300%
Low temperature brittleness	- 40°

PART 3 EXECUTION

3.01 INSTALLATION

A. Thoroughly clean and remove all shipping materials prior to setting.
B. Install stop log systems per Manufacturer's recommendations.

3.02 FIELD TESTING (OPTIONAL)

A. Qualified Factory representative shall provide (8) hours of training for facility employees. (Optional)
B. Representative shall complete a Certification of Proper Installation and provide copies to the Owner, Engineer, Contractor and Manufacturing Facility. (When applicable)

END OF SECTION

HOMEOWNER APPROVAL AND RELEASE FORM
10TH AND N SEWER UPGRADE – PHASE 2
(PROJECT NO. P21067)
CITY OF SPRINGFIELD, OR

Site Address: _____

I/We hereby accept the restoration work performed on my/our property by (Name of Contractor). The work has been performed to my/our satisfaction and I/we release (Name of Contractor) and the City of Springfield from any further obligations with respect to this work.

Owner Name:_____

Date:_____

Signature:_____

Owner Name:_____

Date:_____

Signature:_____

City of Springfield – Traffic Control Plan (TCP)

PROJECT NAME: _____ **CITY PROJECT#:** _____

PROJECT ENGINEER: _____ **PHONE:** _____

PRIME CONTRACTOR: _____ **PHONE:** _____

SUB CONTRACTOR: _____ **PHONE:** _____

TCP SUPERVISOR: _____ **PHONE:** _____

WORK HOURS: _____ **START DATE:** _____ **END DATE:** _____

EQUIPMENT: _____

TRAFFIC IMPACTS: _____

TRAFFIC SIGNAL TURN OFF/ON: _____

CRITERA for CITY of SPRINGFIELD - TRAFFIC CONTROL PLAN SUBMITALS

Submit your Traffic Control Plan (TCP) with the following information on 8.5" x 11" or 11" x 17" paper. **Fill out and include this form with your TCP.**

1) The TCP shall be a legible hand drawing, or a computer aided design with the following information:
    a. A vicinity map, a north arrow, road names, intersection/driveway access points, curb lines, the work zone, and any special features (buildings, access points, sight obstructions) that could affect the TCP.
    b. Location(s) where the TCP will be active. - This can be a 'line drawing' of the work zone(s) and/or a map that clearly indicates where traffic control devices will be placed, including spacing and cone tapers.
    c. Attachments of the appropriate traffic control diagram(s) as shown in the current MUTCD and/or the ODOT - Oregon Temporary Traffic Control Handbook that reflect the work zone may be included as a standard reference.
    d. ODOT Traffic Control Handbook Website (PDF) - http://www.oregon.gov/ODOT/HWY/TRAFFIC-ROADWAY/docs/pdf/OTTCH_06.pdf?ga=t

TCP - CITY APPROVAL: _____ **DATE**:_____

SPECIAL CONDITIONS:

Traffic Control Plan - Example

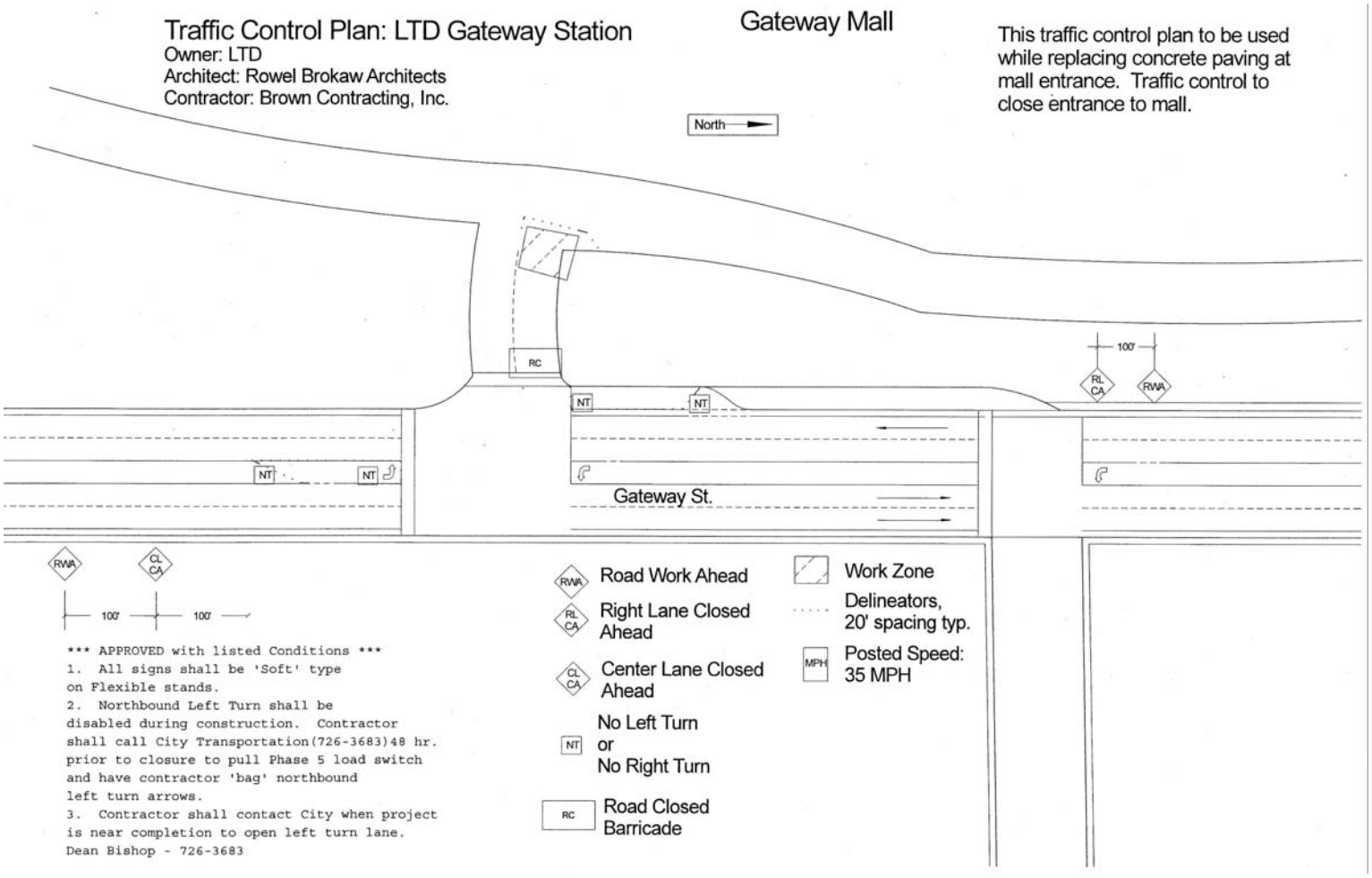

10TH AND N SEWER UPGRADE - PHASE 2

CITY PROJECT NO. P21067

VICINITY MAP 1

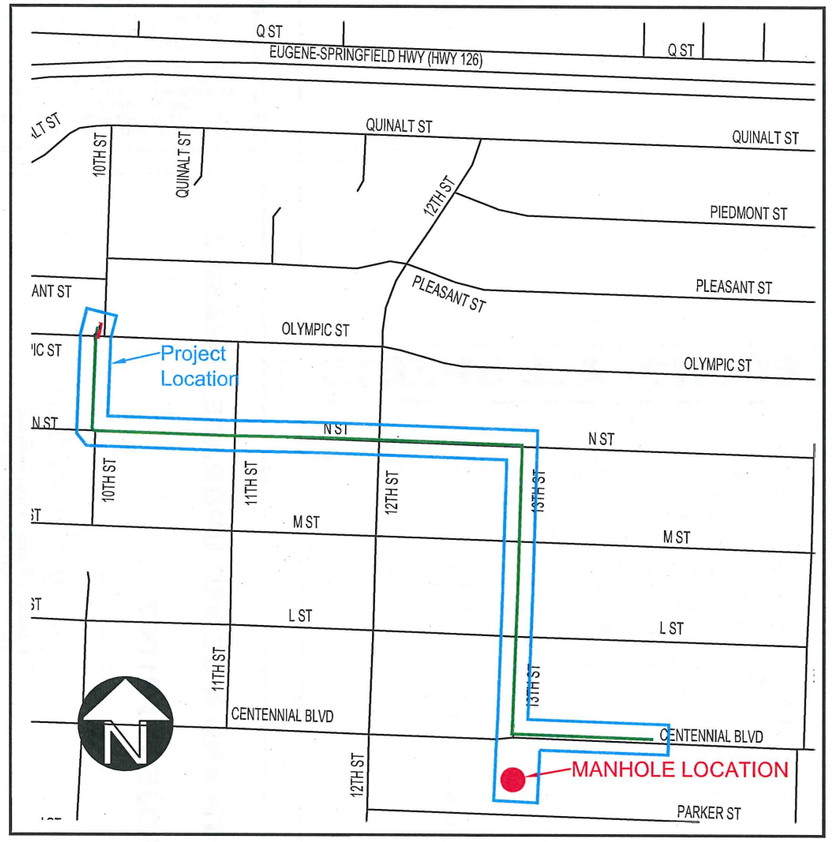

Scale 1" = 500'

SHEET INDEX

COVER SHEET	pg. 1
LOCATION MAP	pg. 2
GENERAL NOTES	pg. 3
EROSION NOTES & DETAILS	pg. 4A / 4B
Line A - Sta. 1+00 - 1+54	pg. 5A / 5B
Line B - Sta. 10+00 - 14+00	pg. 6A / 6B
Line B - Sta. 14+00 - 18+00	pg. 7A / 7B
Line B - Sta. 18+00 - 22+50	pg. 8A / 8B
Line B - Sta. 22+50 - 27+00	pg. 9A / 9B
Line B - Sta. 27+00 - 32+00	pg. 10A / 10B
Line B - Sta. 32+00 - 37+00	pg. 11A / 11B
Line B - Sta. 37+00 - 41+00	pg. 12A / 12B
Line B - Sta. 41+00 - 41+93	pg. 13A / 13B
SS Manhole Replacement	pg. 14A / 14B / 14C
Flow Control Manhole Detail	pg. 15A
10th and N Manhole Detail	pg. 15B
13th and Centennial Manhole Detail	pg. 15C
Stormwater Relocation Sheets	pg. 16A / 16B
CURB RAMP / PED PATH DETAILS	
10th & Olympic Streets Vcty	pg. 17
NW 10th & Olympic Streets	pg. 18
NE 10th & Olympic Streets	pg. 19
SW 10th & Olympic Streets	pg. 20
10th & 'N' Streets Vcty	pg. 21
S 10th & 'N' Streets	pg. 21A
N 10th & 'N' Streets	pg. 22
13th & 'N' Streets Vcty	pg. 23
North 13th & 'N' Streets	pg. 23A
South 13th & 'N' Streets	pg. 23B
13th & 'M' Streets	pg. 24
13th - N to M Path	pg. 24A
13th & 'L' Streets Vcty	pg. 25
S 13th & 'L' Streets Vcty	pg. 25A
N 13th & 'L' Streets Vcty	pg. 26
13th - M to L Path	pg. 26A
Pedestrian Path	pg. 27
Pedestrian Path	pg. 28
Slurry Seal and Street Reconstruct	pg. 29

No.	Revision/Issue	Date

NOTE:

UTILITY LOCATIONS ARE APPROXIMATE
DO NOT
SCALE OR LOCATE UTILITY LINES OR MAINS FROM THESE DRAWINGS
CALL FOR UTILITY LOCATES
1-800-332-2344

THE CONTRACTOR SHALL BE RESPONSIBLE FOR DETERMINING UTILITY LOCATIONS PRIOR TO BEGINNING OF CONSTRUCTION.
THESE PLANS MAY NOT SHOW ALL UTILITIES OR THE CORRECT LOCATIONS.

10TH AND N SEWER UPGRADE - PHASE 2

PROJECT P21067

City of Springfield
PUBLIC WORKS / ENGINEERING
225 FIFTH STREET, SPRINGFIELD, OR 97477
PHONE (541) 726-3753 FAX (541) 736-1021
INTERNET www.ci.springfield.or.gov

REGISTERED PROFESSIONAL ENGINEER
59,604
Kenneth J. Vogeney 7/10/13
OREGON
JAN 12, 1999
KENNETH JAY VOGENEY

EXPIRES 6/30/14

SHEET 1

LOCATION MAP OF PROJECT

Scale 1" = 300'

LEGEND- ALL SHEETS

GAS LINE	GAS
FIBER OPTIC (NO. OF CABLES)	COM
WATER LINE	W
POWER (ELECTRIC)	E
STORM SEWER (NEW)	SD
STORM SEWER (EXISTING)	SD
RIGHT OF WAY	ROW
SANITARY SEWER (NEW)	SS
SANITARY SEWER (EXISTING)	SS
EASEMENT	EA
TEMPORARY CONSTRUCTION EASEMENT	TCE
SANITARY SEWER LATERAL	
GAS VALVE	
WATER VALVE	
FIRE HYDRANT	
WATER METER	
UTILITY BOX	
POWER POLE/LIGHT	
CATCH BASIN	
CURB INLET	
STORM MANHOLE	D
SANITARY MANHOLE	S
MAIL BOX	MB
UTILITY POLE	
GUY WIRE	
TREE	
POWER PEDESTAL	P
LIGHT POLE	
BUSH/HEDGE	
TELEPHONE PEDESTAL	T

THIS SHEET ONLY

ASSOCIATED SHEET NUMBER 8

No.	Revision/Issue	Date

NOTE:

UTILITY LOCATIONS ARE APPROXIMATE
DO NOT
SCALE OR LOCATE UTILITY LINES OR MAINS
FROM THESE DRAWINGS
CALL FOR UTILITY LOCATES
1-800-332-2344

THE CONTRACTOR SHALL BE RESPONSIBLE FOR DETERMINING UTILITY LOCATIONS PRIOR TO BEGINNING OF CONSTRUCTION.
THESE PLANS MAY NOT SHOW ALL UTILITIES OR THE CORRECT LOCATIONS.

10TH AND N SEWER UPGRADE - PHASE 2

PROJECT P21067

City of Springfield
PUBLIC WORKS / ENGINEERING
225 FIFTH STREET, SPRINGFIELD, OR 97477
PHONE (541) 726-3753 FAX (541) 736-1021
INTERNET www.ci.springfield-or.gov

REGISTERED PROFESSIONAL ENGINEER
59,604
Kenneth J. Vogeney 7/10/13
OREGON
JAN 12, 1999
KENNETH JAY VOGENEY

EXPIRES 6/30/14

SHEET
2

GENERAL CONSTRUCTION NOTES

A. ALL MATERIALS AND WORKMANSHIP WITHIN THE PUBLIC RIGHT-OF-WAY OR PUBLIC EASEMENTS SHALL MEET CITY OF SPRINGFIELD DEPARTMENT OF PUBLIC WORKS "STANDARD CONSTRUCTION SPECIFICATIONS, 1994" AS AMENDED IN 1998 (OR CURRENT EDITION), IN ADDITION TO THESE PLANS.

B. OREGON LAW REQUIRES THE CONTRACTOR TO FOLLOW RULES ADOPTED BY THE OREGON UTILITY NOTIFICATION CENTER. THOSE RULES ARE SET FORTH IN OAR 952-001-0010 THROUGH OAR 952-001-0100. THE CONTRACTOR MAY OBTAIN COPIES OF THE RULES BY CALLING THE CENTER. NOTE: THE TELEPHONE NUMBER FOR THE OREGON UTILITY NOTIFICATION CENTER IS (800) 332-2344.

C. LOCATION AND/OR DEPTH OF EXISTING UTILITIES SHOWN ON PLANS ARE APPROXIMATE. IT IS THE CONTRACTOR'S RESPONSIBILITY TO CONTACT ALL UTILITY COMPANIES FOR UNDERGROUND LOCATION OF FACILITIES AT LEAST 48 HOURS PRIOR TO EXCAVATING OR "POTHOLING". THE "ONE-CALL" NUMBER (800) 332-2344.

D. CONTRACTOR SHALL BE RESPONSIBLE FOR COORDINATION WITH UTILITY COMPANIES ON THE TIMING OF INSTALLATION OF THEIR FACILITIES.

E. CONTRACTOR REQUIRED TO NOTIFY UTILITIES OF OPEN TRENCHING FOR THE PROJECT TO ALLOW POSSIBLE COMMUNICATION CABLE INSTALLATION.

F. THE CONTRACTOR SHALL PROVIDE ALL TRAFFIC CONTROL DEVICES NECESSARY TO PROTECT AND SAFEGUARD THE PUBLIC AND WORKERS AGAINST INJURY AND PROTECT THE WORK AGAINST DAMAGE. ALL TEMPORARY TRAFFIC CONTROL SIGNING AND DEVICES SHALL BE IN PLACE PRIOR TO BEGINNING WORK. ALL TRAFFIC CONTROL SHALL CONFORM TO THE MANUAL ON UNIFORM TRAFFIC CONTROL DEVICES FOR STREETS AND HIGHWAYS (MUTCD), CURRENT EDITION, AS SUPPLEMENTED AND AMENDED BY THE OREGON SUPPLEMENTS. FLAGGING SHALL BE PERFORMED AS SHOWN IN THE "OREGON TEMPORARY TRAFFIC CONTROL HANDBOOK FOR OPERATIONS OF THREE DAYS OR LESS", 2006 OR CURRENT EDITION. THE CONTRACTOR SHALL BE RESPONSIBLE FOR ANY REQUIRED TRAFFIC CONTROL AS FIELD CONDITIONS WARRANT. THE CONTRACTOR SHALL SUBMIT A TRAFFIC CONTROL PLAN AT THE PRE-CONSTRUCTION CONFERENCE FOR CITY REVIEW AND APPROVAL.

G. ALL SANITARY AND STORM SEWER CONNECTIONS TO EXISTING CITY OWNED FACILITIES (PIPE, CATCH BASINS, MANHOLES, ETC.) SHALL BE INSPECTED BY THE INSPECTOR PRIOR TO HOOK UP. CONTACT THE INSPECTOR NO LESS THAN 48 HOURS PRIOR TO DESIRED INSPECTION TIME.

H. BEFORE BACK-FILLING THE END OF A MAINLINE PIPE, NOT ENDING AT A MANHOLE OR A CLEAN OUT, THE CONTRACTOR SHALL PERFORM THE T.V. INSPECTION AS REQUIRED BY THE STANDARD SPECIFICATIONS AND ALLOW THE ENGINEER TO DETERMINE THE EXACT LOCATION AND ELEVATION OF THE END OF THE PIPE.

I. WHERE CONNECTING TO AN EXISTING PIPE. THE CONTRACTOR SHALL EXPOSE THE END OF THE EXISTING PIPE AND ALLOW THE ENGINEER TO VERIFY EXACT LOCATION AND ELEVATION, CONDITION, AND POSITIVE FLOW BEFORE LAYING ANY NEW PIPE ON THAT SYSTEM.

J. THE SEWER GRADE SHALL BE PER THE PLANS SPECIFICATIONS AND WITH THE MINIMUM COVER AS SHOWN ON THE PLANS.

K. THE CONTRACTOR SHALL INSPECT THE SEWER BY T.V. INSPECTION AFTER ALL BACKFILL AND BEFORE THE FINAL LIFT OF ASPHALT PAVING. THE CONTRACTOR SHALL SUPPLY THE CITY WITH A WRITTEN T.V. REPORT AND VIDEO TAPE OR DVD FOR CITY APPROVAL AT LEAST 2 WORKING DAYS BEFORE THE PRE-PAVING MEETING.

L. CONTRACTOR TO SCHEDULE A PRE-PAVING MEETING 24 HOURS PRIOR TO PAVING. CONTACT THE ENGINEER TO SCHEDULE THE MEETING.

M. ALL JOINTS BETWEEN EXISTING AND NEW ASPHALT PAVING SHALL BE SEALED WITH POLYMERIZED ASPHALT TO PREVENT PICK UP.

N. COMPACTION REQUIREMENTS:

LAYER	RATE	TEST
SUBGRADE	95%	T99
CRUSHED ROCK (BASE/TRENCH)	95%	T180
ASPHALT (LOCAL)	90%	RICE
ASPHALT (COLLECTOR/ARTERIAL)	92%	RICE

O. CONCRETE COMPRESSIVE STRENGTH REQUIREMENTS (PSI):

CONCRETE USE	FIELD	LABORATORY
SIDEWALK/ADA RAMPS	3000	3450
CURBS/GUTTERS	3500	4025
DRIVEWAYS	3500	4025
PAVEMENT	4000	4600

P. THIS PROJECT SHALL COMPLY WITH THE AMERICAN DISABILITIES ACT REQUIREMENTS SUCH AS INCORPORATION OF DESIGN CRITERIA FOR HANDICAP RAMPS, MAXIMUM PROFILE AND CROSS SECTION SLOPES FOR SIDEWALKS, UPGRADING EXISTING HANDICAP FACILITIES WHERE MAJOR CONSTRUCTION IS OCCURRING, AND BUILDING WARNING FOR OBJECTS IN SIDEWALK SUCH AS CURBING OR LANDSCAPING AROUND MAILBOXES.

Q. CONTRACTOR IS RESPONSIBLE TO OBTAIN APPLICABLE PERMITS FROM OTHER AGENCIES WITH JURISDICTIONS INCLUDING BUT NOT LIMITED TO LANE COUNTY, OREGON DEPARTMENT OF TRANSPORTATION, OREGON DIVISION OF STATE LANDS, THE ARMY CORPS OF ENGINEERS, OR THE DEPARTMENT OF ENVIRONMENTAL QUALITY.

R. ALL IMPROVEMENTS THAT WILL BE PRIVATELY OWNED AND MAINTAINED WILL BE BOUND BY THE CURRENT REQUIREMENTS OF THE STATE OF OREGON STRUCTURAL SPECIALTY CODE, PLUMBING SPECIALTY CODE, AND/OR CITY OF SPRINGFIELD BUILDING DIVISION REQUIREMENTS. CONTRACTOR IS RESPONSIBLE TO OBTAIN APPLICABLE PERMITS FROM OTHER CITY DEPARTMENTS PRIOR TO DOING PRIVATE WORK.

S. EROSION CONTROL MEASURES SHALL BE IN PLACE PRIOR TO THE START OF CONSTRUCTION.

T. STREET TREES: ONLY STREET TREES WITH A MINIMUM TRUNK CALIPER OF 2 IN. MEASURED 6 IN. ABOVE THE ROOT STEM SHALL BE SELECTED FOR PLANTING. REFER TO CHAPTER 6 OF CITY OF SPRINGFIELD ENGINEERING DESIGN STANDARDS AND PROCEDURES FOR APPROVED STREET TREES.

U. A PRE-CONSTRUCTION CONFERENCE IS REQUIRED BEFORE START OF CONSTRUCTION. ALL UTILITIES, CONTRACTORS AND CITY REPRESENTATIVES SHALL HAVE RECEIVED THE FINAL APPROVED PLANS AT LEAST 5 WORKING DAYS PRIOR TO THE PRE CONSTRUCTION CONFERENCE.

V. THE ENGINEER AND/OR CITY HAVE THE RIGHT TO REQUIRE ADDITIONAL WORK NOT SHOWN HEREIN BUT NECESSARY FOR THE SUCCESSFUL COMPLETION OF THE PROJECT.

W. REQUESTS BY THE CONTRACTOR FOR CHANGES SHALL BE APPROVED BY THE ENGINEER AND THE CITY IN WRITING PRIOR TO IMPLEMENTATION.

X. CONTRACTOR SHALL SUBMIT EVIDENCE OF INSURANCE IN ACCORDANCE WITH THE STANDARD SPECIFICATION TO THE CITY FOR APPROVAL PRIOR TO BEGINNING WORK.

Y. CONTRACTOR SHALL BE AWARE IF PAVING IS NOT SCHEDULED OR DOES NOT OCCUR PRIOR TO OCTOBER 15TH, WET WEATHER PROVISIONS INCLUDING ADDITIONAL ROCK SUBSTRUCTURE AND GEOTEXTILE FABRIC SHALL BE USED. REFER TO STANDARD SPECIFICATION SECTION 301.1.01 AND THE TYPICAL CROSS SECTIONS CONTAINED HEREIN FOR DETAILS. ADDITIONAL PROVISIONS SHALL BE AT THE CONTRACTOR'S EXPENSE.

Z. THE CONTRACTOR SHALL VERIFY EACH EXISTING SANITARY AND STORM CONNECTION.

No.	Revision/Issue	Date

NOTE:

UTILITY LOCATIONS ARE APPROXIMATE
DO NOT
SCALE OR LOCATE UTILITY LINES OR MAINS FROM THESE DRAWINGS
CALL FOR UTILITY LOCATES
1-800-332-2344

THE CONTRACTOR SHALL BE RESPONSIBLE FOR DETERMINING UTILITY LOCATIONS PRIOR TO BEGINNING OF CONSTRUCTION.
THESE PLANS MAY NOT SHOW ALL UTILITIES OR THE CORRECT LOCATIONS.

10TH AND N SEWER UPGRADE - PHASE 2

PROJECT P21067

City of Springfield
PUBLIC WORKS / ENGINEERING
225 FIFTH STREET, SPRINGFIELD, OR 97477
PHONE (541) 726-3753 FAX (541) 736-1021
INTERNET www.ci.springfield.or.gov

REGISTERED PROFESSIONAL ENGINEER 59,604 OREGON JAN 12, 1999 KENNETH JAY VOGENEY

Kenneth J. Vogeney 7/14/13

EXPIRES 6/30/14

SHEET 3

NOTES:

1. PLACE INLET/CATCH BASIN PROTECTION AT EXISTING FIXTURES (SEE DETAIL ON SHEET 4B.)

GENERAL NOTES:

1. CONCRETE WASHOUTS ARE NOT PROVIDED ON THIS PROJECT
2. SAW CUTTING SLURRY IS TO BE VACUUMED
3. ANY AREAS OF EXPOSED SOILS. INCLUDING ROADWAY EMBANKMENTS, THAT WILL NOT BE DISTURBED FOR TWO DAYS DURING THE WET SEASON (OCTOBER 1 TO APRIL 30) OR SEVEN DAYS DURING THE DRY SEASON (MAY 1 TO SEPTEMBER 30) SHALL BE IMMEDIATELY STABILIZED WITH AN APPROVED ESC METHOD (SEEDING & MULCHING WITH STRAW, BARK, COMPOST, OR PLASTIC COVERING, ETC.).

EROSION CONTROL STANDARD NOTES:

A. Approval of this Erosion and Sedimentation Control Plan (ESCP) does not constitute an approval of permanent road or drainage design (e.g., size and location of roads, pipes, restrictors, channels, retention facilities, utilities, etc.).

B. Approval of this ESCP does not relieve the permit holder and or the contractor from all other permitting requirements. Prior to beginning construction activities, all other necessary approvals shall be obtained.

C. An inspection of the erosion control measures by City LDAP staff is required prior to any ground disturbance on the site.

D. The erosion and sediment control measures shown on the plan are the minimum requirements for anticipated site conditions. During the construction period, these measures shall be upgraded as needed for unexpected storm events and to ensure that sediment and sediment-laden water does not leave the site.

E. The implementation of the ESCP and the construction, maintenance, replacement, and upgrading of the erosion and sediment control measures is the responsibility of the permit holder and or the contractor until all construction is completed and accepted by the City and vegetation/landscaping is established per the required warranty period.

F. In the event the ESC facilities identified on the ESCP are not functioning properly, the contractor is responsible for immediately implementing changes to the ESCP as directed by the ESCP engineer or his inspector. The engineer, his inspector or the City may stop all construction activity on site until the erosion problem is corrected and all ESC facilities are functioning properly. If the contractor does not immediately implement changes to the ESCP identified by the ESCP engineer or his inspector, the City may implement the necessary changes and require payment from the contractor prior to project acceptance by the City.

G. The boundaries of the clearing limits shown on this plan shall be clearly flagged in the field by the engineer prior to construction. During the construction period, no disturbance beyond the flagged clearing limits shall be permitted. The flagging shall be maintained by the permit holder and or the contractor for the duration of construction.

H. The erosion and sediment control measures on active sites shall be inspected and maintained daily and within the 24 hours after any storm event of greater than 0.5 inches of rain per 24 hour period. Measures shall be inspected by the permit holder and or the contractor after each rainfall and at least daily during prolonged rainfall. Any required repairs or adjustments shall be made immediately. The erosion and sediment control measures on inactive sites shall be inspected a minimum of once every two (2) weeks or within 48 hours following a storm event. Written records shall be kept of weekly reviews of the ESC facilities during the wet season (October 1 to April 30) and of monthly reviews during the dry season (May1 to September 30).

I. All erosion and sediment control measures shall be protected from damage at all times. Control measures shall remain in place until permanent or temporary re-vegetation has been stabilized. Any measure that is damaged or destroyed shall be repaired or replaced immediately.

J. Any areas of exposed soils, including roadway embankments, that will not be disturbed for two days during the wet season (October 1 to April 30) or seven days during the dry season (May 1 to September 30) shall be immediately stabilized with an approved ESC method (seeding & mulching with straw, bark, compost, or plastic covering, etc.).

K. A supply of materials necessary to meet compliance and implement the LDAP or other best management erosion practices under all weather conditions shall be maintained at all times on the construction site.

L. No hazardous substances, such as paints, thinners, fuels and other chemicals shall be released onto the site, adjacent properties, or into water features, the City's storm water system, or related natural resources.

M. Street sweeping shall be performed as needed or when directed by the City inspector to ensure public right-of-ways are kept clean and free of debris. Street flushing is prohibited.

N. When trucking saturated soils from the site, either water-tight trucks shall be used or loads shall be drained on site until dripping has been reduced to no more than one gallon per hour. Sediment laden water will not be allowed to enter the storm water system

O. Extracted ground water from excavated trenches shall be disposed of in a suitable manner without damage to adjacent property, public storm water system, water features, and related natural resources. Approval of a dewatering system does not guarantee that it will meet compliance or be acceptable for use in all situations. Modifications to the dewatering system will be required if compliance can not be met. At no time will sediment laden water be allowed to leave the construction site.

P. At no time shall more than one foot of sediment be allowed to accumulate within a catch basin. All catch basins and conveyance lines shall be cleaned prior to paving. The cleaning operation shall not flush sediment laden water into the downstream system.

Q. Any required stabilized construction entrances and roads shall be installed at the beginning of construction and maintained for the duration of the project. Additional measures, such as wash pads, may be required to ensure that all paved areas are kept clean for the duration of the project.

R. Any permanent flow control facility used as a temporary settling basin shall be modified with the necessary erosion control measures and shall provide adequate storage capacity.

S. Where straw mulch for temporary erosion control is required, it shall be applied at a minimum thickness of two to three inches.

T. In preparation of the wet season, all disturbed areas shall be reviewed to identify which ones can be seeded in preparation for the winter rains. A sketch map of those areas to be seeded and those areas to remain uncovered shall be submitted to the City by September 15. The City can require seeding of additional areas in order to protect surface waters, adjacent properties, or drainage facilities. Disturbed areas identified for seeding shall be seeded prior to the beginning of the wet season (October 1).

No.	Revision/Issue	Date

NOTE:

UTILITY LOCATIONS ARE APPROXIMATE
DO NOT
SCALE OR LOCATE UTILITY LINES OR MAINS FROM THESE DRAWINGS
CALL FOR UTILITY LOCATES
1-800-332-2344

THE CONTRACTOR SHALL BE RESPONSIBLE FOR DETERMINING UTILITY LOCATIONS PRIOR TO BEGINNING OF CONSTRUCTION.
THESE PLANS MAY NOT SHOW ALL UTILITIES OR THE CORRECT LOCATIONS.

10TH AND N SEWER UPGRADE - PHASE 2

PROJECT P21067

City of Springfield
PUBLIC WORKS / ENGINEERING
225 FIFTH STREET, SPRINGFIELD, OR 97477
PHONE (541) 726-3753 FAX (541) 736-1021
INTERNET www.ci.springfield-or.gov

REGISTERED PROFESSIONAL ENGINEER
59,604
OREGON
JAN 12, 1999
KENNETH JAY VOGENEY

Kenneth J. Vogeney 1/10/13

EXPIRES 6/30/14

SHEET
4A

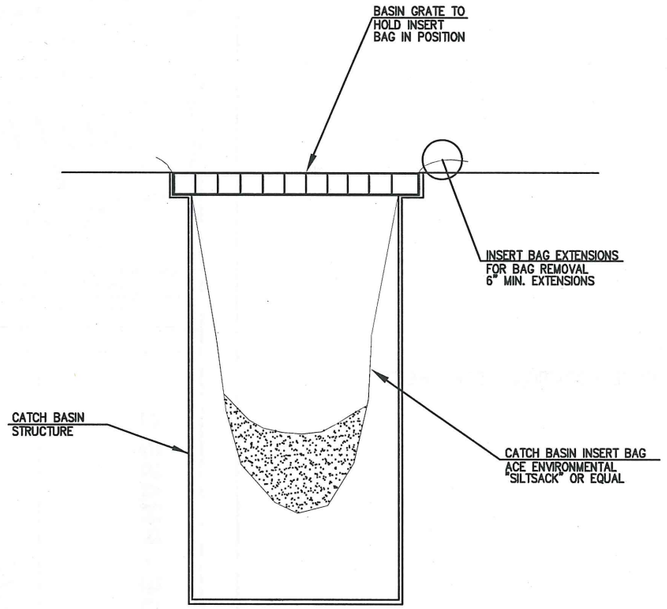

1 CATCH BASIN INSERT BAG

NO SCALE

INLET PROTECTION

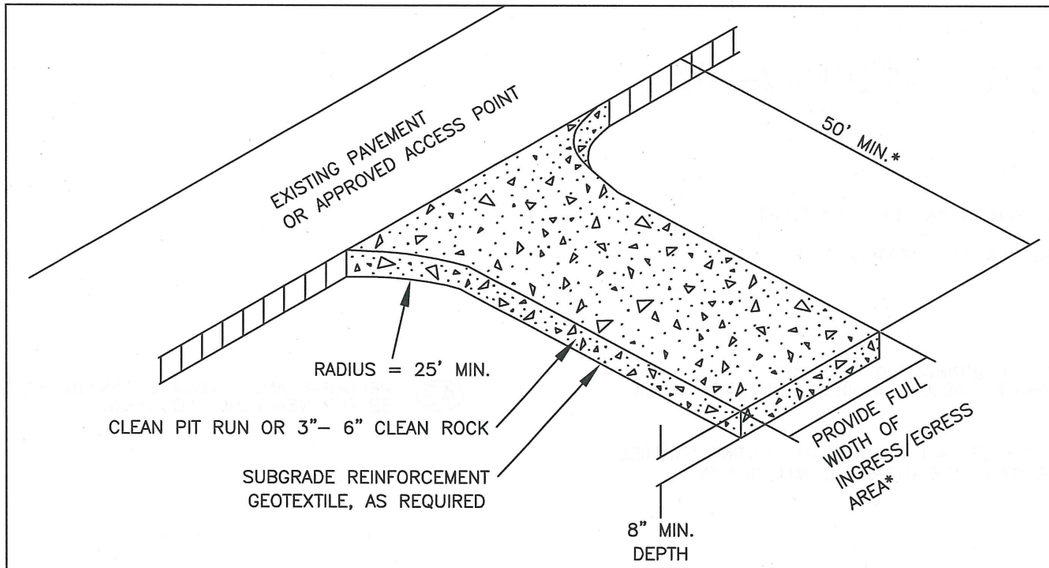

*20' MIN. FOR SINGLE FAMILY AND DUPLEX RESIDENTIAL

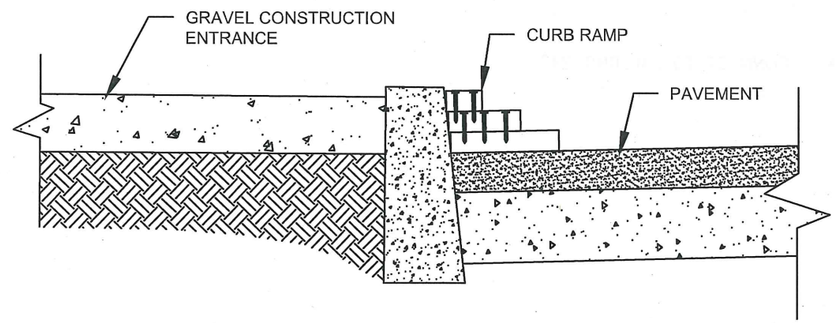

NOTES:

1. THE ENTRANCE SHALL BE MAINTAINED IN A CONDITION THAT WILL PREVENT TRACKING OR FLOWING OF SEDIMENT ONTO PUBLIC RIGHT–OF–WAYS. THIS MAY REQUIRE TOP DRESSING, REPAIR AND/OR CLEAN OUT OF ANY MEASURES USED TO TRAP SEDIMENT.
2. WHEN NECESSARY, WHEELS SHALL BE CLEANED PRIOR TO ENTRANCE ONTO PUBLIC RIGHT–OF– WAY.
3. WHEN WASHING IS REQUIRED, IT SHALL BE DONE ON AN AREA STABILIZED WITH CRUSHED STONE THAT DRAINS INTO AN APPROVED SEDIMENT TRAP OR SEDIMENT BASIN.
4. WHERE RUNOFF CONTAINING SEDIMENT LADEN WATER IS LEAVING THE SITE VIA THE CONSTRUCTION ENTRANCE, OTHER MEASURES SHALL BE IMPLEMENTED TO DIVERT RUNOFF THROUGH AN APPROVED FILTERING SYSTEM.
5. DIMENSIONS
   - SINGLE FAMILY
     20' LONG BY 20' WIDE 8" DEEP OF ¾" MINUS CLEAN ROCK.
   - COMMERCIAL
     50' LONG BY 20' WIDE 3–6" CLEAN ROCK, GOVERNING AUTHORITY MAY REQUIRE GEOTEXTILE FABRIC TO PREVENT SUB–SOIL PUMPING.

FOR FURTHER INFORMATION ON DESIGN CRITERIA SEE CHAPTER 4 OF CLEAN WATER SERVICES EROSION PREVENTION AND SEDIMENT CONTROL PLANNING AND DESIGN MANUAL.

CONSTRUCTION ENTRANCE

Detail Drawing 855 REVISED 12–06

Clean Water Services
Our commitment is clear.

No.	Revision/Issue	Date

NOTE:

UTILITY LOCATIONS ARE APPROXIMATE
DO NOT
SCALE OR LOCATE UTILITY LINES OR MAINS FROM THESE DRAWINGS
CALL FOR UTILITY LOCATES
1-800-332-2344

THE CONTRACTOR SHALL BE RESPONSIBLE FOR DETERMINING UTILITY LOCATIONS PRIOR TO BEGINNING OF CONSTRUCTION.
THESE PLANS MAY NOT SHOW ALL UTILITIES OR THE CORRECT LOCATIONS.

10TH AND N SEWER UPGRADE - PHASE 2

PROJECT P21067

City of Springfield
PUBLIC WORKS / ENGINEERING
225 FIFTH STREET, SPRINGFIELD, OR 97477
PHONE (541) 726–3753 FAX (541) 736–1021
INTERNET www.ci.springfield-or.gov

REGISTERED PROFESSIONAL ENGINEER 59,604 OREGON JAN 12, 1999 KENNETH JAY VOGENEY

Kenneth J. Vogeney 3/19/13

EXPIRES 6/30/14

SHEET 4B

(1) SAWCUT. SEE CITY OF SPRINGFIELD STANDARD DETAIL 4–16 (TYP).

(2) REMOVE MAX 6' WIDTH OF AC. INSTALL SEWER PIPE AND REPLACE AC WITH LANE COUNTY APPROVED LEVEL 2 "C" MIX. SEE CITY OF SPRINGFIELD STANDARD DETAIL 4–17.

(4) INSTALL ADA RAMP PER DETAILS. SEE SHEETS 17–26.

(5) APPROXIMATE LOCATION OF WATER LINE TO REMAIN AND PROTECT (TYP).

(6) APPROXIMATE LOCATION OF GAS LINE TO REMAIN AND PROTECT (TYP).

(9) INSTALL STANDARD 48" MANHOLE, SEE CITY OF SPRINGFIELD STANDARD DETAIL 4–1. MANHOLE RIMS ARE APPROXIMATE. ADJUST MANHOLE TO FINISH GRADE.

(10) INSTALL 24" PVC ASTM F 679 PIPE(TYP).

(11) EXISTING STORM DRAINAGE PIPE TO BE PRESERVED. ALL DAMAGE TO EXISTING UTILITIES DURING CONSTRUCTION SHALL BE PAID FOR BY CONTRACTOR AND WILL NOT BE REIMBURSED BY CITY (TYP).

(13) EXISTING SANITARY SEWER PIPE TO BE PRESERVED. ALL DAMAGE TO EXISTING UTILITIES DURING CONSTRUCTION SHALL BE PAID FOR BY CONTRACTOR AND WILL NOT BE REIMBURSED BY CITY (TYP).

(15) REMOVE EXISTING WATERTIGHT MECHANICAL PLUG AND CONNECT TO EXISTING 24" STUBOUT.

(21) INSTALL CDF IN TOP 2 FEET OF TRENCH UNDER ASPHALT.

(29) REMOVE APPROXIMATELY 40 FEET OF EXISTING SANITARY SEWER PIPE.

(30) REMOVE EXISTING MANHOLE.

(42) PRESERVE AND RELOCATE EXISTING PAVERS TO NEW FENCE LOCATION. SEE SHEET 6B FOR NEW FENCE LOCATION.

No.	Revision/Issue	Date

NOTE:

UTILITY LOCATIONS ARE APPROXIMATE
DO NOT
SCALE OR LOCATE UTILITY LINES OR MAINS FROM THESE DRAWINGS
CALL FOR UTILITY LOCATES
1-800-332-2344

THE CONTRACTOR SHALL BE RESPONSIBLE FOR DETERMINING UTILITY LOCATIONS PRIOR TO BEGINNING OF CONSTRUCTION.
THESE PLANS MAY NOT SHOW ALL UTILITIES OR THE CORRECT LOCATIONS.

10TH AND N SEWER UPGRADE - PHASE 2

PROJECT P21067

City of Springfield
PUBLIC WORKS / ENGINEERING
225 FIFTH STREET, SPRINGFIELD, OR 97477
PHONE (541) 726–3753 FAX (541) 736–1021
INTERNET www.ci.springfield–or.gov

REGISTERED PROFESSIONAL ENGINEER
59,604
OREGON
JAN 12, 1999
KENNETH JAY VOGENEY

Kenneth J. Vogeney 7/10/13

EXPIRES 6/30/14

SHEET

5A

Project Limit

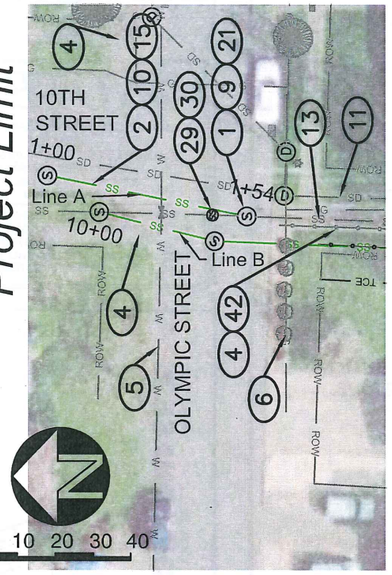

See Sheet 6

Line A STA. 1+00-1+54

Scale 1" = 40'

Project Limit

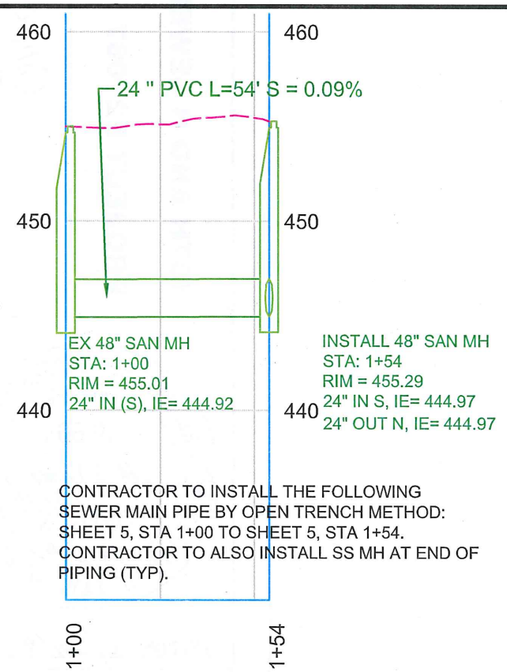

CONTRACTOR TO INSTALL THE FOLLOWING SEWER MAIN PIPE BY OPEN TRENCH METHOD: SHEET 5, STA 1+00 TO SHEET 5, STA 1+54. CONTRACTOR TO ALSO INSTALL SS MH AT END OF PIPING (TYP).

See Sheet 6

Line A STA. 1+00-1+54

Scale 1" = 40'

No.	Revision/Issue	Date

NOTE:

UTILITY LOCATIONS ARE APPROXIMATE
DO NOT
SCALE OR LOCATE UTILITY LINES OR MAINS FROM THESE DRAWINGS
CALL FOR UTILITY LOCATES
1-800-332-2344

THE CONTRACTOR SHALL BE RESPONSIBLE FOR DETERMINING UTILITY LOCATIONS PRIOR TO BEGINNING OF CONSTRUCTION.
THESE PLANS MAY NOT SHOW ALL UTILITIES OR THE CORRECT LOCATIONS.

10TH AND N SEWER UPGRADE - PHASE 2

PROJECT P21067

City of Springfield
PUBLIC WORKS / ENGINEERING
225 FIFTH STREET, SPRINGFIELD, OR 97477
PHONE (541) 726-3753 FAX (541) 736-1021
INTERNET www.ci.springfield.or.gov

REGISTERED PROFESSIONAL ENGINEER
59,604
Kenneth J Vogeney 7/18/13
OREGON
JAN 12, 1999
KENNETH JAY VOGENEY

EXPIRES 6/30/14

SHEET

5B

1. SAWCUT. SEE CITY OF SPRINGFIELD STANDARD DETAIL 4–16 (TYP).
2. REMOVE MAX 6' WIDTH OF AC. INSTALL SEWER PIPE AND REPLACE AC WITH LANE COUNTY APPROVED LEVEL 2 "C" MIX. SEE CITY OF SPRINGFIELD STANDARD DETAIL 4–17.

4. INSTALL ADA RAMP PER DETAILS. SEE SHEETS 17–26.
5. APPROXIMATE LOCATION OF WATER LINE TO REMAIN AND PROTECT (TYP).
6. APPROXIMATE LOCATION OF GAS LINE TO REMAIN AND PROTECT (TYP).

9. INSTALL STANDARD 48" MANHOLE, SEE CITY OF SPRINGFIELD STANDARD DETAIL 4–1. MANHOLE RIMS ARE APPROXIMATE. ADJUST MANHOLE TO FINISH GRADE.
10. INSTALL 24" PVC ASTM F 679 PIPE(TYP).
11. EXISTING STORM DRAINAGE PIPE TO BE PRESERVED. ALL DAMAGE TO EXISTING UTILITIES DURING CONSTRUCTION SHALL BE PAID FOR BY CONTRACTOR AND WILL NOT BE REIMBURSED BY CITY (TYP).
12. EXISTING CURB INLET OR CATCH BASIN TO BE PRESERVED. ALL DAMAGE TO EXISTING UTILITIES DURING CONSTRUCTION SHALL BE PAID FOR BY CONTRACTOR AND WILL NOT BE REIMBURSED BY CITY (TYP).
13. EXISTING SANITARY SEWER PIPE TO BE PRESERVED. ALL DAMAGE TO EXISTING UTILITIES DURING CONSTRUCTION SHALL BE PAID FOR BY CONTRACTOR AND WILL NOT BE REIMBURSED BY CITY (TYP).

16. REMOVE EXISTING FENCE TO ALLOW FOR INSTALLATION OF NEW SANITARY SEWER. FENCE SHALL BE REPLACED WITH EXISTING OR NEW AS NEEDED PER ENGINEER.

19. SANITARY SEWER MANHOLE LOCATION TO CHANGE TO 15' WEST. CONTRACTOR TO PLACE NEW MANHOLE AND PIPE PER PLANS TO ACCOMMODATE NEW 24" SANITARY SEWER PIPE.

21. INSTALL CDF IN TOP 2 FEET OF TRENCH UNDER ASPHALT.

23. MAINTAIN AND PROTECT EXISTING 24" CONCRETE SANITARY SEWER PIPE.
24. INSTALL CONSTRUCTION ENTRANCE, SEE CLEAN WATER SERVICES CONSTRUCTION ENTRANCE DETAIL ON SHEET 4B.

28. INSTALL COMBINED FLOW MANHOLE. SEE PROFILE FOR SIZE. SEE DETAIL SHEETS 15B AND 15C.

30. REMOVE EXISTING MANHOLE.

35. REMOVE AND REPLACE EXISTING CURB AND GUTTER PER CITY OF SPRINGFIELD STANDARD DETAIL 3–8.

43. INSTALL 10' WIDE MULTI–USE PATH WITH SIGNAGE AND ADA RAMPS. SEE SHEETS 27–28.

45. SALVAGE EXISTING FENCE AND PAVERS TO BE REUSED AT NEW FENCE LOCATION. SEE NOTE 46.
46. PLACE SALVAGED FENCE AND PAVERS FROM NOTE 45 AT NEW LOCATION.
47. EXISTING FENCE TO BE REMOVED. REINSTALL FENCE AT NEW LOCATION TO ACCOMMODATE WIDENED MULTI–USE PATH. SEE NOTE 48.
48. INSTALL NEW FENCE FROME NOTE 47 AT NEW LOCATION.

No.	Revision/Issue	Date

NOTE:

UTILITY LOCATIONS ARE APPROXIMATE
DO NOT
SCALE OR LOCATE UTILITY LINES OR MAINS FROM THESE DRAWINGS
CALL FOR UTILITY LOCATES
1-800-332-2344

THE CONTRACTOR SHALL BE RESPONSIBLE FOR DETERMINING UTILITY LOCATIONS PRIOR TO BEGINNING OF CONSTRUCTION.
THESE PLANS MAY NOT SHOW ALL UTILITIES OR THE CORRECT LOCATIONS.

10TH AND N SEWER UPGRADE - PHASE 2

PROJECT P21067

City of Springfield
PUBLIC WORKS / ENGINEERING
225 FIFTH STREET, SPRINGFIELD, OR 97477
PHONE (541) 726-3753 FAX (541) 736-1021
INTERNET www.ci.springfield-or.gov

REGISTERED PROFESSIONAL ENGINEER
59,604
Kenneth J Vogeney 7/16/13
OREGON
JAN 12, 1999
KENNETH JAY VOGENEY

EXPIRES 6/30/14

SHEET
6A

See Sheet 7

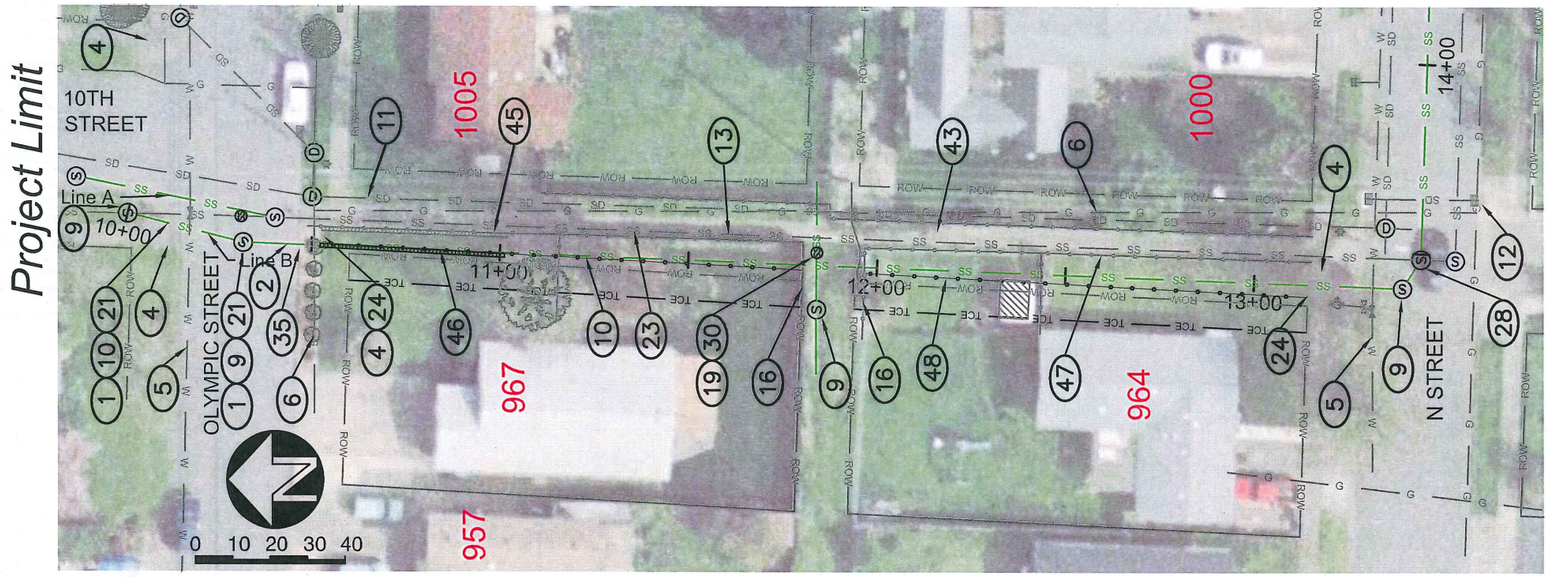

Line B STA. 10+00-14+00

Scale 1" = 40'

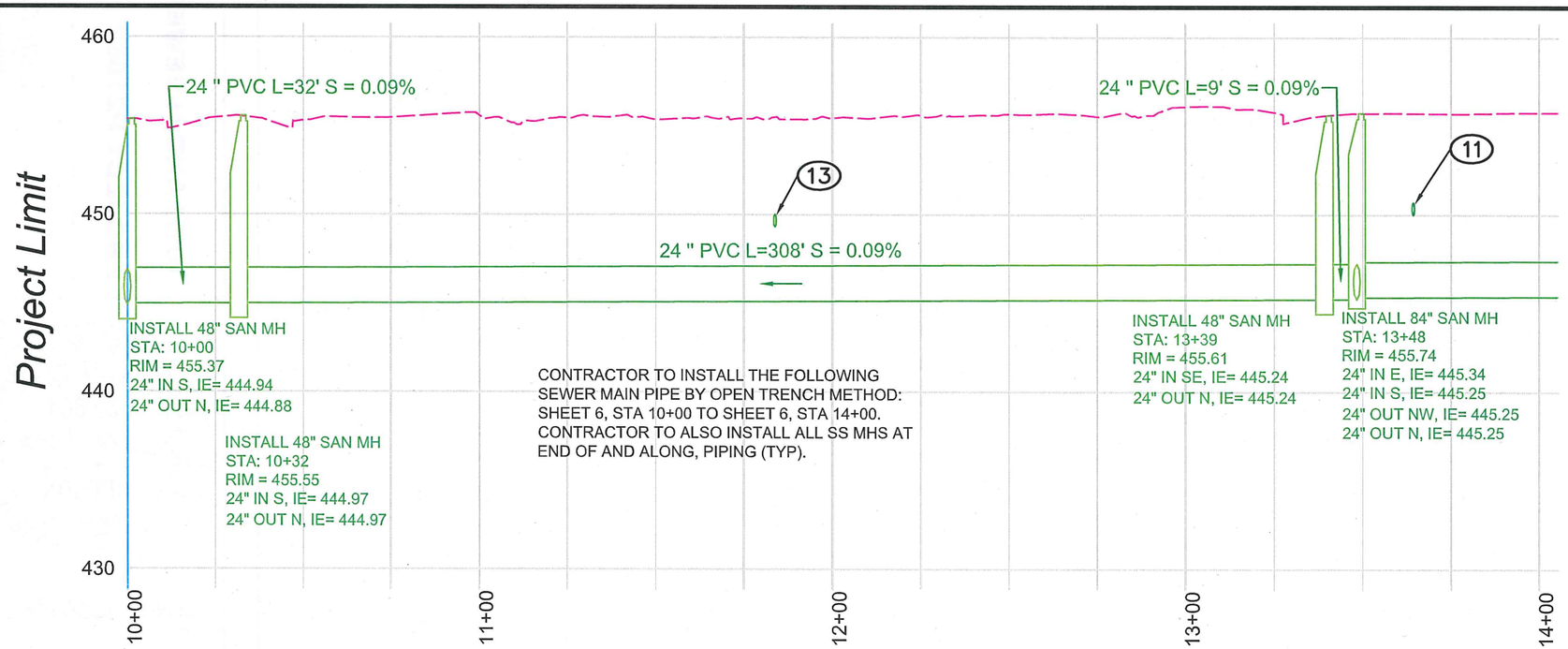

See Sheet 7

Line B STA. 10+00-14+00

Scale 1" = 40'

No.	Revision/Issue	Date

NOTE:

UTILITY LOCATIONS ARE APPROXIMATE
DO NOT
SCALE OR LOCATE UTILITY LINES OR MAINS
FROM THESE DRAWINGS
CALL FOR UTILITY LOCATES
1-800-332-2344

THE CONTRACTOR SHALL BE RESPONSIBLE FOR DETERMINING UTILITY LOCATIONS PRIOR TO BEGINNING OF CONSTRUCTION.
THESE PLANS MAY NOT SHOW ALL UTILITIES OR THE CORRECT LOCATIONS.

10TH AND N SEWER UPGRADE - PHASE 2

PROJECT P21067

City of Springfield
PUBLIC WORKS / ENGINEERING
225 FIFTH STREET, SPRINGFIELD, OR 97477
PHONE (541) 726-3753 FAX (541) 736-1021
INTERNET www.ci.springfield.or.gov

REGISTERED PROFESSIONAL ENGINEER 59,604 OREGON JAN 12, 1999 KENNETH JAY VOGENEY

EXPIRES 6/30/14

SHEET

6B

(1) SAWCUT. SEE CITY OF SPRINGFIELD STANDARD DETAIL 4–16 (TYP).

(2) REMOVE MAX 6' WIDTH OF AC. INSTALL SEWER PIPE AND REPLACE AC WITH LANE COUNTY APPROVED LEVEL 2 "C" MIX. SEE CITY OF SPRINGFIELD STANDARD DETAIL 4–17.

(5) APPROXIMATE LOCATION OF WATER LINE TO REMAIN AND PROTECT (TYP).

(6) APPROXIMATE LOCATION OF GAS LINE TO REMAIN AND PROTECT (TYP).

(9) INSTALL STANDARD 48" MANHOLE, SEE CITY OF SPRINGFIELD STANDARD DETAIL 4–1. MANHOLE RIMS ARE APPROXIMATE. ADJUST MANHOLE TO FINISH GRADE.

(10) INSTALL 24" PVC ASTM F 679 PIPE(TYP).

(11) EXISTING STORM DRAINAGE PIPE TO BE PRESERVED. ALL DAMAGE TO EXISTING UTILITIES DURING CONSTRUCTION SHALL BE PAID FOR BY CONTRACTOR AND WILL NOT BE REIMBURSED BY CITY (TYP).

(21) INSTALL CDF IN TOP 2 FEET OF TRENCH UNDER ASPHALT.

No.	Revision/Issue	Date

NOTE:

UTILITY LOCATIONS ARE APPROXIMATE
DO NOT
SCALE OR LOCATE UTILITY LINES OR MAINS FROM THESE DRAWINGS
CALL FOR UTILITY LOCATES
1-800-332-2344

THE CONTRACTOR SHALL BE RESPONSIBLE FOR DETERMINING UTILITY LOCATIONS PRIOR TO BEGINNING OF CONSTRUCTION.
THESE PLANS MAY NOT SHOW ALL UTILITIES OR THE CORRECT LOCATIONS.

10TH AND N SEWER UPGRADE - PHASE 2

PROJECT P21067

City of Springfield
PUBLIC WORKS / ENGINEERING
225 FIFTH STREET, SPRINGFIELD, OR 97477
PHONE (541) 726–3753 FAX (541) 736–1021
INTERNET www.ci.springfield–or.gov

REGISTERED PROFESSIONAL ENGINEER
59,604
Kenneth J. Vogeney 7/10/13
OREGON
JAN 12, 1999
KENNETH JAY VOGENEY

EXPIRES 6/30/14

SHEET

7A

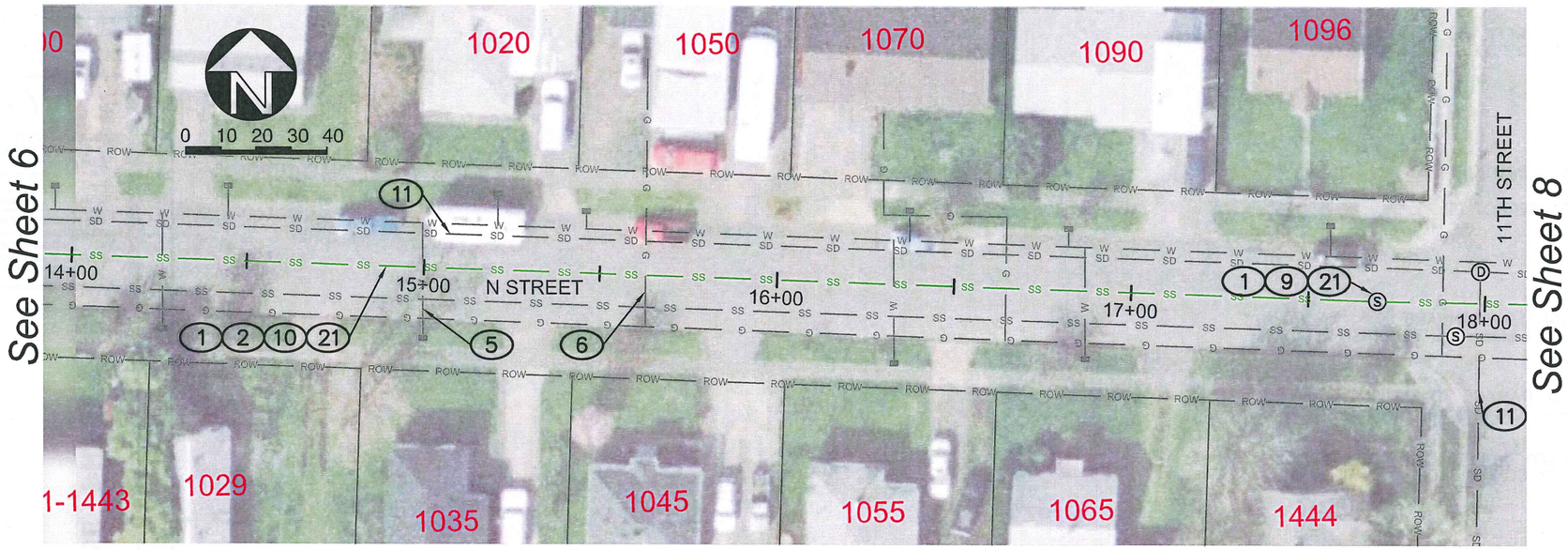

Line B STA. 14+00-18+00

Scale 1" = 40'

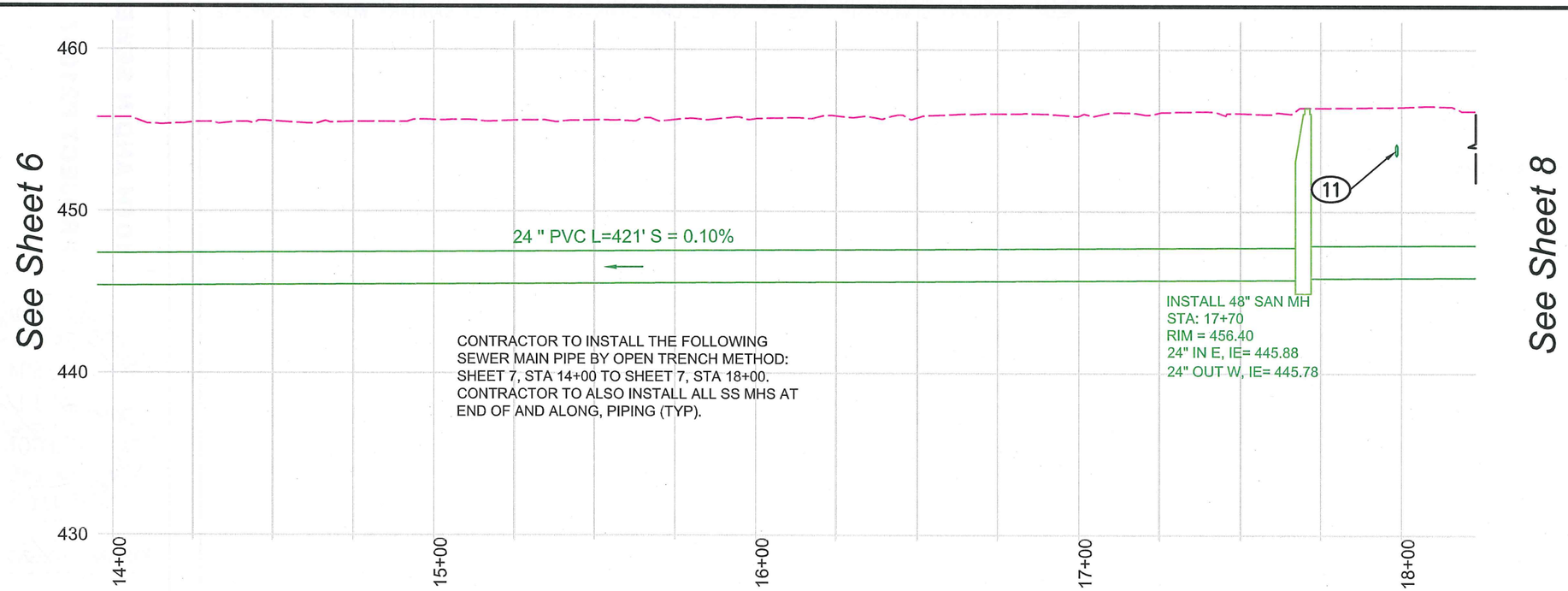

Line B STA. 14+00-18+00

Scale 1" = 40'

No.	Revision/Issue	Date

NOTE:

UTILITY LOCATIONS ARE APPROXIMATE
DO NOT
SCALE OR LOCATE UTILITY LINES OR MAINS
FROM THESE DRAWINGS
CALL FOR UTILITY LOCATES
1-800-332-2344

THE CONTRACTOR SHALL BE RESPONSIBLE FOR DETERMINING UTILITY LOCATIONS PRIOR TO BEGINNING OF CONSTRUCTION.
THESE PLANS MAY NOT SHOW ALL UTILITIES OR THE CORRECT LOCATIONS.

10TH AND N SEWER UPGRADE - PHASE 2

PROJECT P21067

City of Springfield

PUBLIC WORKS / ENGINEERING
225 FIFTH STREET, SPRINGFIELD, OR 97477
PHONE (541) 726-3753 FAX (541) 736-1021
INTERNET www.ci.springfield.or.gov

REGISTERED PROFESSIONAL ENGINEER
59,604
OREGON
JAN 12, 1999
KENNETH JAY VOGENEY

Kenneth J. Vogeney 2/10/13

EXPIRES 6/30/14

SHEET

7B

(1) SAWCUT. SEE CITY OF SPRINGFIELD STANDARD DETAIL 4–16 (TYP).

(2) REMOVE MAX 6' WIDTH OF AC. INSTALL SEWER PIPE AND REPLACE AC WITH LANE COUNTY APPROVED LEVEL 2 "C" MIX. SEE CITY OF SPRINGFIELD STANDARD DETAIL 4–17.

(5) APPROXIMATE LOCATION OF WATER LINE TO REMAIN AND PROTECT (TYP).

(6) APPROXIMATE LOCATION OF GAS LINE TO REMAIN AND PROTECT (TYP).

(9) INSTALL STANDARD 48" MANHOLE, SEE CITY OF SPRINGFIELD STANDARD DETAIL 4–1. MANHOLE RIMS ARE APPROXIMATE. ADJUST MANHOLE TO FINISH GRADE.

(10) INSTALL 24" PVC ASTM F 679 PIPE(TYP).

(11) EXISTING STORM DRAINAGE PIPE TO BE PRESERVED. ALL DAMAGE TO EXISTING UTILITIES DURING CONSTRUCTION SHALL BE PAID FOR BY CONTRACTOR AND WILL NOT BE REIMBURSED BY CITY (TYP).

(12) EXISTING CURB INLET OR CATCH BASIN TO BE PRESERVED. ALL DAMAGE TO EXISTING UTILITIES DURING CONSTRUCTION SHALL BE PAID FOR BY CONTRACTOR AND WILL NOT BE REIMBURSED BY CITY (TYP).

(50) REMOVE EXISTING STORM DRAINAGE PIPE AS NECESSARY TO FACILITATE INSTALLATION OF NEW SANITARY SEWER PIPE. INSTALL NEW STORM DRAINAGE PIPE AFTER SANITARY WORK IS COMPLETE.

(21) INSTALL CDF IN TOP 2 FEET OF TRENCH UNDER ASPHALT.

No.	Revision/Issue	Date

NOTE:

UTILITY LOCATIONS ARE APPROXIMATE
DO NOT
SCALE OR LOCATE UTILITY LINES OR MAINS FROM THESE DRAWINGS
CALL FOR UTILITY LOCATES
1-800-332-2344

THE CONTRACTOR SHALL BE RESPONSIBLE FOR DETERMINING UTILITY LOCATIONS PRIOR TO BEGINNING OF CONSTRUCTION.
THESE PLANS MAY NOT SHOW ALL UTILITIES OR THE CORRECT LOCATIONS.

10TH AND N SEWER UPGRADE - PHASE 2

PROJECT P21067

City of Springfield
PUBLIC WORKS / ENGINEERING
225 FIFTH STREET, SPRINGFIELD, OR 97477
PHONE (541) 726–3753 FAX (541) 736–1021
INTERNET www.ci.springfield–or.gov

REGISTERED PROFESSIONAL ENGINEER
59,604
Kenneth J. Vogeney 7/10/13
OREGON
JAN 12, 1999
KENNETH JAY VOGENEY

EXPIRES 6/30/14

SHEET
8A

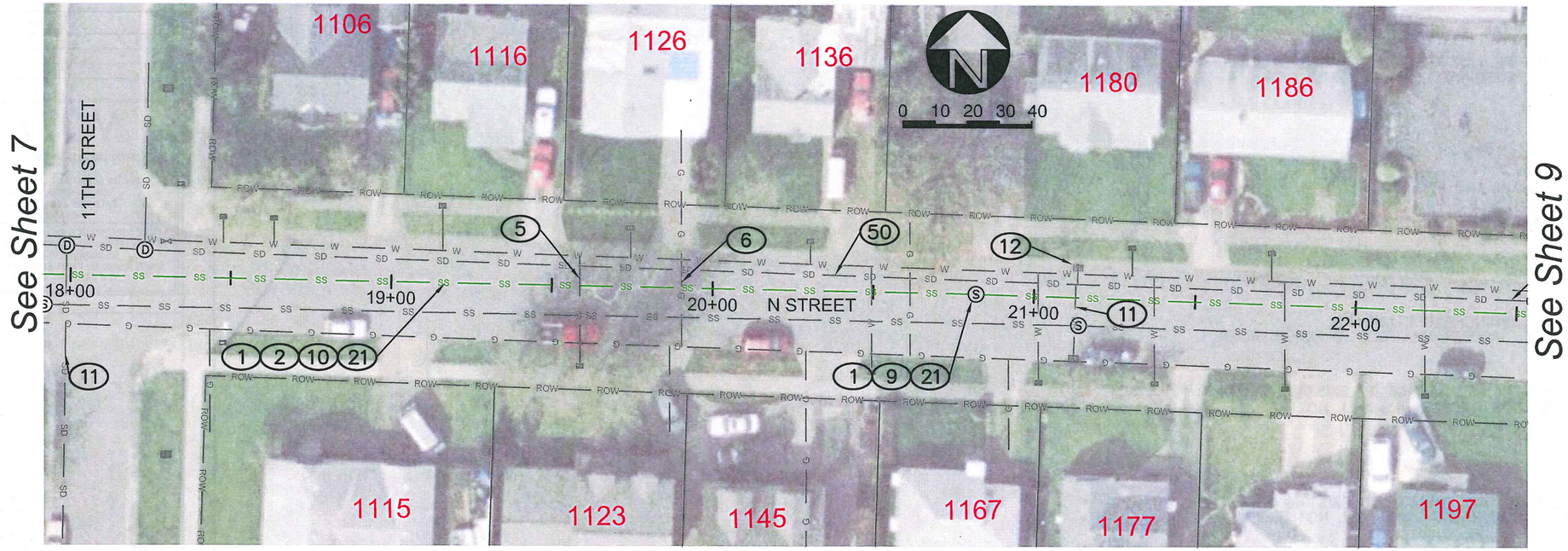

Line B STA. 18+00-22+50

Scale 1" = 40'

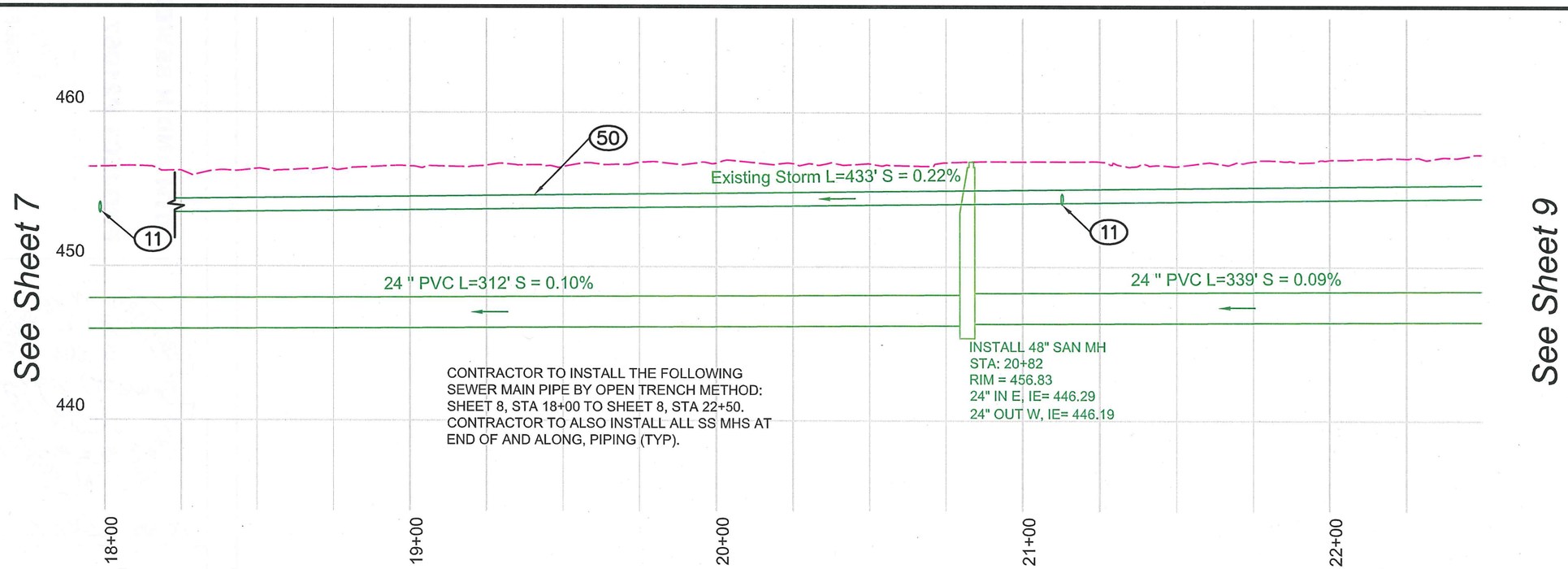

Line B STA. 18+00-22+50

Scale 1" = 40'

No.	Revision/Issue	Date

NOTE:

UTILITY LOCATIONS ARE APPROXIMATE
DO NOT
SCALE OR LOCATE UTILITY LINES OR MAINS
FROM THESE DRAWINGS
CALL FOR UTILITY LOCATES
1-800-332-2344

THE CONTRACTOR SHALL BE RESPONSIBLE FOR DETERMINING UTILITY LOCATIONS PRIOR TO BEGINNING OF CONSTRUCTION.
THESE PLANS MAY NOT SHOW ALL UTILITIES OR THE CORRECT LOCATIONS.

10TH AND N SEWER UPGRADE - PHASE 2

PROJECT P21067

City of Springfield

PUBLIC WORKS / ENGINEERING
225 FIFTH STREET, SPRINGFIELD, OR 97477
PHONE (541) 726-3753 FAX (541) 736-1021
INTERNET www.ci.springfield.or.gov

REGISTERED PROFESSIONAL ENGINEER
59,604
OREGON
JAN 12, 1999
KENNETH JAY VOGENEY

Kenneth J. Vogeney 7/8/13

EXPIRES 6/30/14

SHEET

8B

(1) SAWCUT. SEE CITY OF SPRINGFIELD STANDARD DETAIL 4–16 (TYP).

(2) REMOVE MAX 6' WIDTH OF AC. INSTALL SEWER PIPE AND REPLACE AC WITH LANE COUNTY APPROVED LEVEL 2 "C" MIX. SEE CITY OF SPRINGFIELD STANDARD DETAIL 4–17.

(5) APPROXIMATE LOCATION OF WATER LINE TO REMAIN AND PROTECT (TYP).

(6) APPROXIMATE LOCATION OF GAS LINE TO REMAIN AND PROTECT (TYP).

(9) INSTALL STANDARD 48" MANHOLE, SEE CITY OF SPRINGFIELD STANDARD DETAIL 4–1. MANHOLE RIMS ARE APPROXIMATE. ADJUST MANHOLE TO FINISH GRADE.

(10) INSTALL 24" PVC ASTM F 679 PIPE(TYP).

(11) EXISTING STORM DRAINAGE PIPE TO BE PRESERVED. ALL DAMAGE TO EXISTING UTILITIES DURING CONSTRUCTION SHALL BE PAID FOR BY CONTRACTOR AND WILL NOT BE REIMBURSED BY CITY (TYP).

(13) EXISTING SANITARY SEWER PIPE TO BE PRESERVED. ALL DAMAGE TO EXISTING UTILITIES DURING CONSTRUCTION SHALL BE PAID FOR BY CONTRACTOR AND WILL NOT BE REIMBURSED BY CITY (TYP).

(21) INSTALL CDF IN TOP 2 FEET OF TRENCH UNDER ASPHALT.

No.	Revision/Issue	Date

NOTE:

UTILITY LOCATIONS ARE APPROXIMATE
DO NOT
SCALE OR LOCATE UTILITY LINES OR MAINS FROM THESE DRAWINGS
CALL FOR UTILITY LOCATES
1-800-332-2344

THE CONTRACTOR SHALL BE RESPONSIBLE FOR DETERMINING UTILITY LOCATIONS PRIOR TO BEGINNING OF CONSTRUCTION.
THESE PLANS MAY NOT SHOW ALL UTILITIES OR THE CORRECT LOCATIONS.

10TH AND N SEWER UPGRADE - PHASE 2

PROJECT P21067

City of Springfield
PUBLIC WORKS / ENGINEERING
225 FIFTH STREET, SPRINGFIELD, OR 97477
PHONE (541) 726-3753 FAX (541) 736-1021
INTERNET www.ci.springfield.or.gov

REGISTERED PROFESSIONAL ENGINEER
59,604
Kenneth J. Vogeney 7/10/13
OREGON
JAN 12, 1999
KENNETH JAY VOGENEY

EXPIRES 6/30/14

SHEET
9A

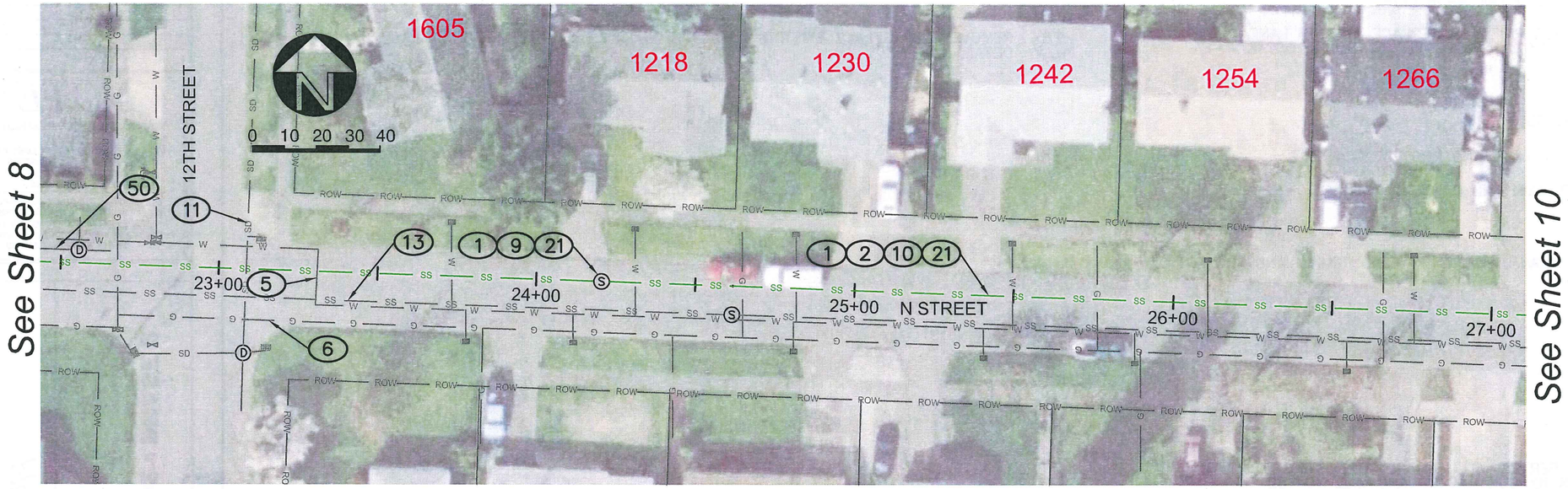

Line B STA. 22+50-27+00

Scale 1" = 40'

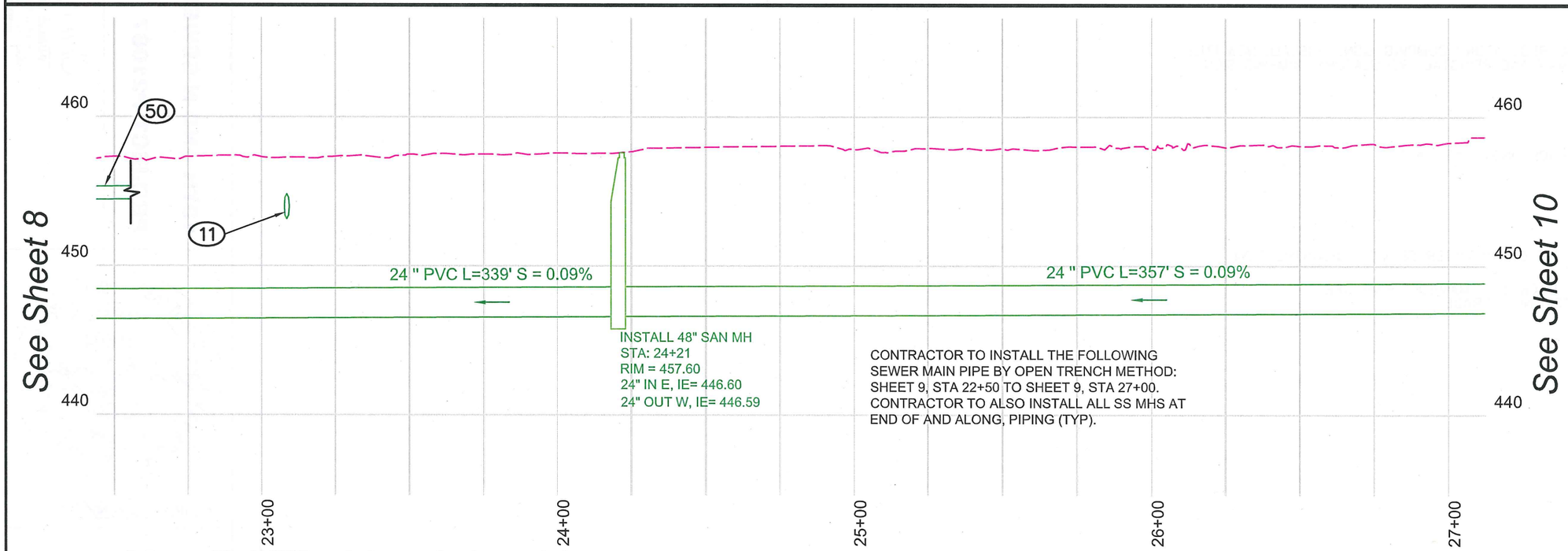

Line B STA. 22+50-27+00

Scale 1" = 40'

No.	Revision/Issue	Date

NOTE:

UTILITY LOCATIONS ARE APPROXIMATE
DO NOT
SCALE OR LOCATE UTILITY LINES OR MAINS
FROM THESE DRAWINGS
CALL FOR UTILITY LOCATES
1-800-332-2344

THE CONTRACTOR SHALL BE RESPONSIBLE FOR DETERMINING UTILITY LOCATIONS PRIOR TO BEGINNING OF CONSTRUCTION.
THESE PLANS MAY NOT SHOW ALL UTILITIES OR THE CORRECT LOCATIONS.

10TH AND N SEWER UPGRADE - PHASE 2

PROJECT P21067

City of Springfield

PUBLIC WORKS / ENGINEERING
225 FIFTH STREET, SPRINGFIELD, OR 97477
PHONE (541) 726-3753 FAX (541) 736-1021
INTERNET www.ci.springfield.or.gov

REGISTERED PROFESSIONAL ENGINEER
59,604
Kenneth J. Vogeney 7/10/13
OREGON
JAN 12, 1999
KENNETH JAY VOGENEY

EXPIRES 6/30/14

SHEET

9B

(1) SAWCUT. SEE CITY OF SPRINGFIELD STANDARD DETAIL 4–16 (TYP).

(2) REMOVE MAX 6' WIDTH OF AC. INSTALL SEWER PIPE AND REPLACE AC WITH LANE COUNTY APPROVED LEVEL 2 "C" MIX. SEE CITY OF SPRINGFIELD STANDARD DETAIL 4–17.

(4) INSTALL ADA RAMP PER DETAILS. SEE SHEETS 17–26.

(5) APPROXIMATE LOCATION OF WATER LINE TO REMAIN AND PROTECT (TYP).

(6) APPROXIMATE LOCATION OF GAS LINE TO REMAIN AND PROTECT (TYP).

(8) APPROXIMATE LOCATION OF UNDERGROUND COMMUNICATION LINE TO REMAIN AND PROTECT (TYP).

(10) INSTALL 24" PVC ASTM F 679 PIPE(TYP).

(13) EXISTING SANITARY SEWER PIPE TO BE PRESERVED. ALL DAMAGE TO EXISTING UTILITIES DURING CONSTRUCTION SHALL BE PAID FOR BY CONTRACTOR AND WILL NOT BE REIMBURSED BY CITY (TYP).

(18) DISMANTLE EXISTING GUARDRAIL AND REGULATORY DUMPING SIGN. INSTALL NEW FULL WIDTH GUARDRAIL EXCLUDING PATHWAY AND REINSTALL REGULATORY DUMPING SIGN.

(21) INSTALL CDF IN TOP 2 FEET OF TRENCH UNDER ASPHALT.

(24) INSTALL CONSTRUCTION ENTRANCE, SEE CLEAN WATER SERVICES CONSTRUCTION ENTRANCE DETAIL ON SHEET 4B.

(25) INSTALL 60" MANHOLE WITH 2' CDF BACKFILL. MANHOLE RIMS ARE APPROXIMATE. ADJUST MANHOLE TO FINISH GRADE.

(33) REMOVE AND REPLACE EXISTING SIDEWALK PER CITY OF SPRINGFIELD STANDARD DETAIL 3–12.

(35) REMOVE AND REPLACE EXISTING CURB AND GUTTER PER CITY OF SPRINGFIELD STANDARD DETAIL 3–8.

(49) SEE SHEETS 24A AND 26A FOR NEW PATH CONSTRUCTION.

No.	Revision/Issue	Date

NOTE:

UTILITY LOCATIONS ARE APPROXIMATE
DO NOT
SCALE OR LOCATE UTILITY LINES OR MAINS FROM THESE DRAWINGS
CALL FOR UTILITY LOCATES
1-800-332-2344

THE CONTRACTOR SHALL BE RESPONSIBLE FOR DETERMINING UTILITY LOCATIONS PRIOR TO BEGINNING OF CONSTRUCTION.
THESE PLANS MAY NOT SHOW ALL UTILITIES OR THE CORRECT LOCATIONS.

10TH AND N SEWER UPGRADE - PHASE 2

PROJECT P21067

City of Springfield
PUBLIC WORKS / ENGINEERING
225 FIFTH STREET, SPRINGFIELD, OR 97477
PHONE (541) 726–3753 FAX (541) 736–1021
INTERNET www.ci.springfield.or.gov

REGISTERED PROFESSIONAL ENGINEER
59,604
Kenneth J. Vogeney 7/10/13
OREGON
JAN 12, 1999
KENNETH JAY VOGENEY

EXPIRES 6/30/14

SHEET
10A

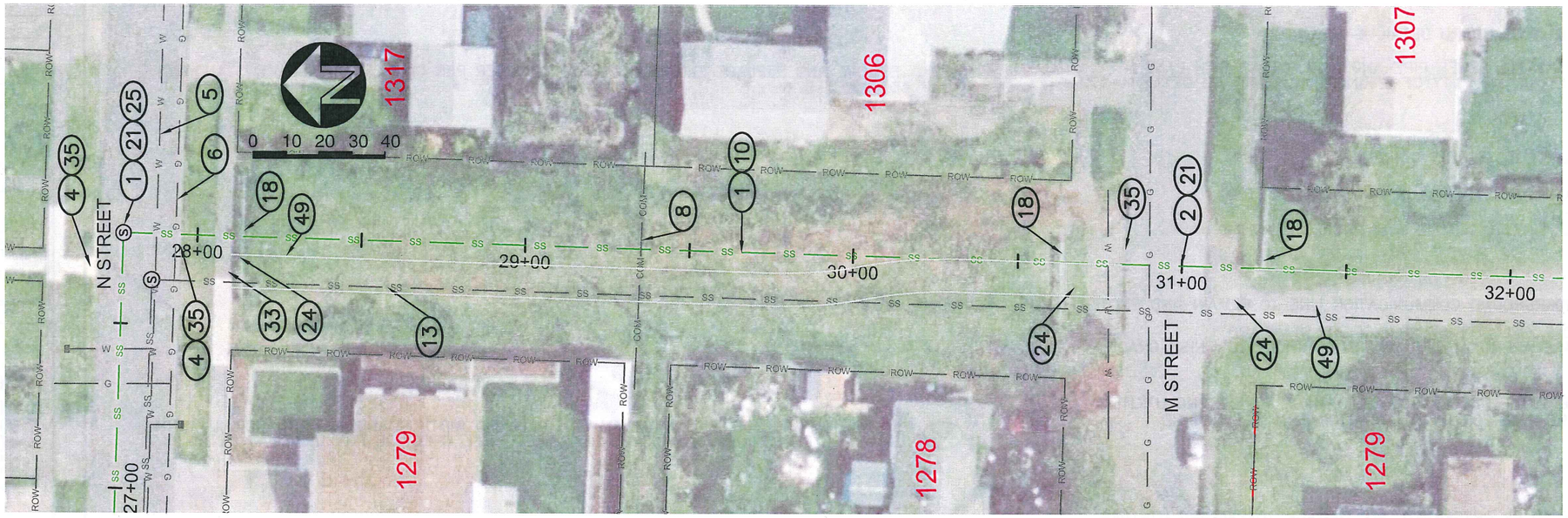

Line B STA. 27+00-32+00

Scale 1" = 40'

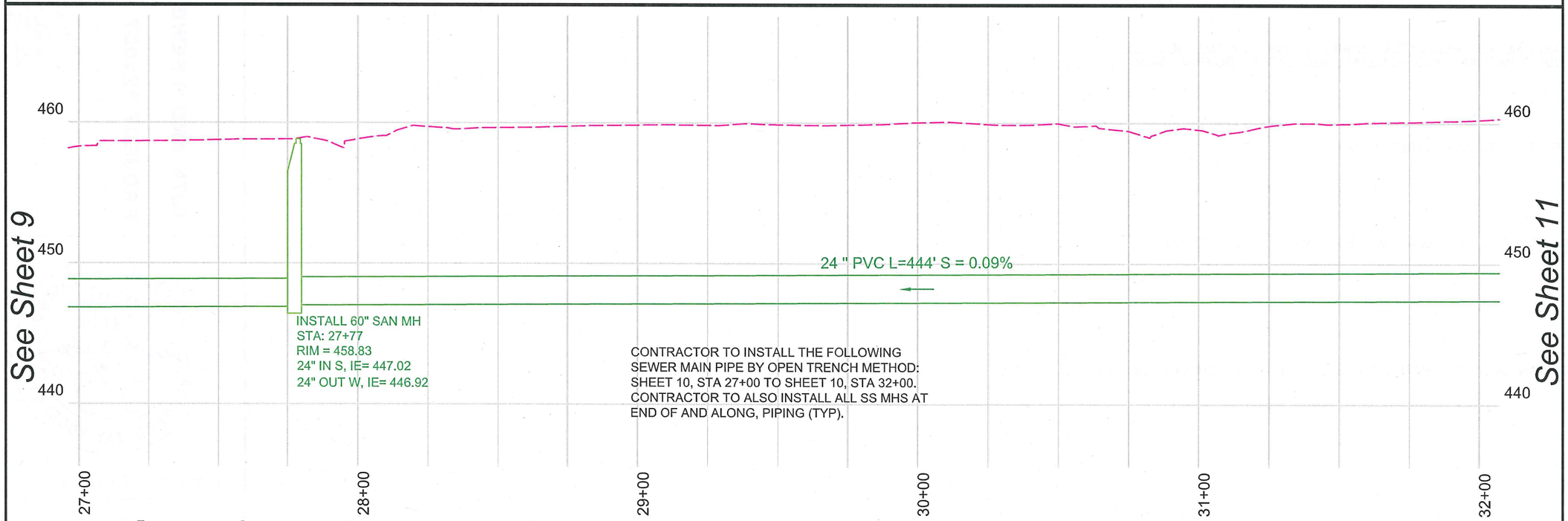

Line B STA. 27+00-32+00

Scale 1" = 40'

No.	Revision/Issue	Date

NOTE:

UTILITY LOCATIONS ARE APPROXIMATE
DO NOT
SCALE OR LOCATE UTILITY LINES OR MAINS
FROM THESE DRAWINGS
CALL FOR UTILITY LOCATES
1-800-332-2344

THE CONTRACTOR SHALL BE RESPONSIBLE FOR DETERMINING UTILITY LOCATIONS PRIOR TO BEGINNING OF CONSTRUCTION.
THESE PLANS MAY NOT SHOW ALL UTILITIES OR THE CORRECT LOCATIONS.

10TH AND N SEWER UPGRADE - PHASE 2

PROJECT P21067

City of Springfield

PUBLIC WORKS / ENGINEERING
225 FIFTH STREET, SPRINGFIELD, OR 97477
PHONE (541) 726-3753 FAX (541) 736-1021
INTERNET www.ci.springfield.or.gov

REGISTERED PROFESSIONAL ENGINEER
59,604
Kenneth J. Vogeney 7/10/13
OREGON
JAN 12, 1999
KENNETH JAY VOGENEY

EXPIRES 6/30/14

SHEET

10B

(1) SAWCUT. SEE CITY OF SPRINGFIELD STANDARD DETAIL 4–16 (TYP).

(2) REMOVE MAX 6' WIDTH OF AC. INSTALL SEWER PIPE AND REPLACE AC WITH LANE COUNTY APPROVED LEVEL 2 "C" MIX. SEE CITY OF SPRINGFIELD STANDARD DETAIL 4–17.

(4) INSTALL ADA RAMP PER DETAILS. SEE SHEETS 17–26.

(5) APPROXIMATE LOCATION OF WATER LINE TO REMAIN AND PROTECT (TYP).

(6) APPROXIMATE LOCATION OF GAS LINE TO REMAIN AND PROTECT (TYP).

(8) APPROXIMATE LOCATION OF UNDERGROUND COMMUNICATION LINE TO REMAIN AND PROTECT (TYP).

(9) INSTALL STANDARD 48" MANHOLE, SEE CITY OF SPRINGFIELD STANDARD DETAIL 4–1. MANHOLE RIMS ARE APPROXIMATE. ADJUST MANHOLE TO FINISH GRADE.

(10) INSTALL 24" PVC ASTM F 679 PIPE(TYP).

(11) EXISTING STORM DRAINAGE PIPE TO BE PRESERVED. ALL DAMAGE TO EXISTING UTILITIES DURING CONSTRUCTION SHALL BE PAID FOR BY CONTRACTOR AND WILL NOT BE REIMBURSED BY CITY (TYP).

(13) EXISTING SANITARY SEWER PIPE TO BE PRESERVED. ALL DAMAGE TO EXISTING UTILITIES DURING CONSTRUCTION SHALL BE PAID FOR BY CONTRACTOR AND WILL NOT BE REIMBURSED BY CITY (TYP).

(18) DISMANTLE EXISTING GUARDRAIL AND REGULATORY DUMPING SIGN. INSTALL NEW FULL WIDTH GUARDRAIL EXCLUDING PATHWAY AND REINSTALL REGULATORY DUMPING SIGN.

(21) INSTALL CDF IN TOP 2 FEET OF TRENCH UNDER ASPHALT.

(24) INSTALL CONSTRUCTION ENTRANCE, SEE CLEAN WATER SERVICES CONSTRUCTION ENTRANCE DETAIL ON SHEET 4B.

(28) INSTALL COMBINED FLOW MANHOLE. SEE PROFILE FOR SIZE. SEE DETAIL SHEETS 15B AND 15C.

(33) REMOVE AND REPLACE EXISTING SIDEWALK PER CITY OF SPRINGFIELD STANDARD DETAIL 3–12.

(35) REMOVE AND REPLACE EXISTING CURB AND GUTTER PER CITY OF SPRINGFIELD STANDARD DETAIL 3–8.

(44) INSTALL NEW RESIDENTIAL DRIVEWAY WITH REDUCED WIDTH GUARDRAIL. GUARDRAIL WIDTH SHALL BE DETERMINED IN FIELD PER ENGINEER. SEE SHEET 26 FOR DRIVEWAY DETAIL.

No.	Revision/Issue	Date

NOTE:

UTILITY LOCATIONS ARE APPROXIMATE
DO NOT
SCALE OR LOCATE UTILITY LINES OR MAINS FROM THESE DRAWINGS
CALL FOR UTILITY LOCATES
1-800-332-2344

THE CONTRACTOR SHALL BE RESPONSIBLE FOR DETERMINING UTILITY LOCATIONS PRIOR TO BEGINNING OF CONSTRUCTION.
THESE PLANS MAY NOT SHOW ALL UTILITIES OR THE CORRECT LOCATIONS.

10TH AND N SEWER UPGRADE - PHASE 2

PROJECT P21067

City of Springfield
PUBLIC WORKS / ENGINEERING
225 FIFTH STREET, SPRINGFIELD, OR 97477
PHONE (541) 726-3753 FAX (541) 736-1021
INTERNET www.ci.springfield-or.gov

REGISTERED PROFESSIONAL ENGINEER
59,604
Kenneth J. Vogeney 7/10/13
OREGON
JAN 12, 1999
KENNETH JAY VOGENEY

EXPIRES 6/30/14

SHEET

11A

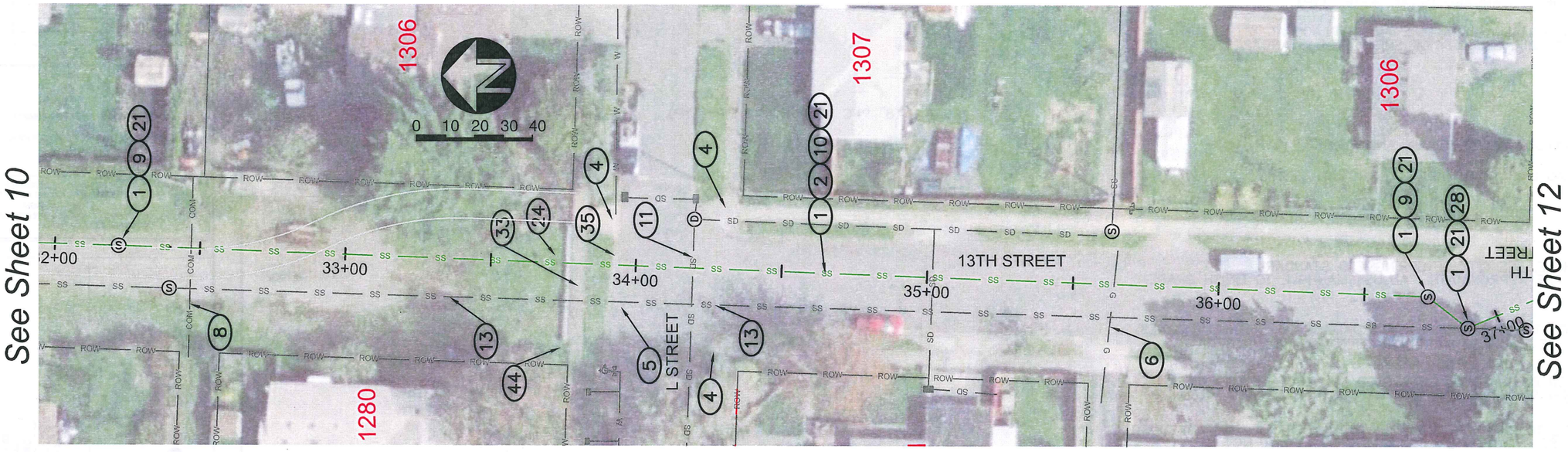

Line B STA. 32+00-37+00

Scale 1" = 40'

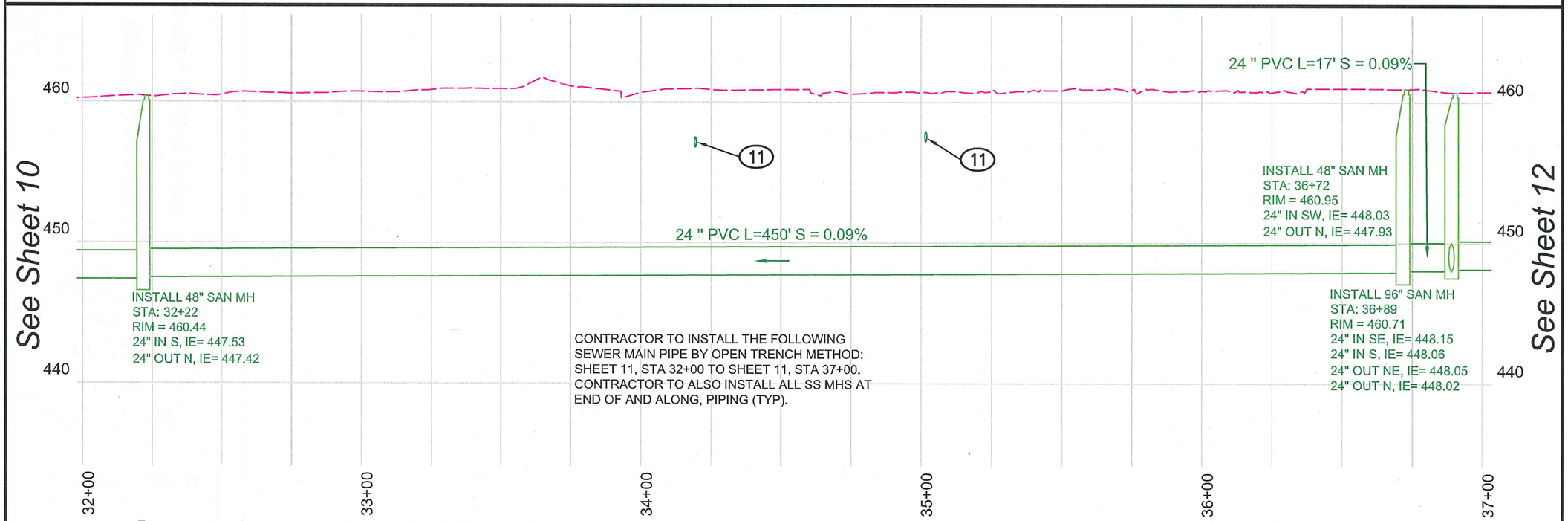

Line B STA. 32+00-37+00

Scale 1" = 40'

No.	Revision/Issue	Date

NOTE:

UTILITY LOCATIONS ARE APPROXIMATE
DO NOT
SCALE OR LOCATE UTILITY LINES OR MAINS FROM THESE DRAWINGS
CALL FOR UTILITY LOCATES
1-800-332-2344

THE CONTRACTOR SHALL BE RESPONSIBLE FOR DETERMINING UTILITY LOCATIONS PRIOR TO BEGINNING OF CONSTRUCTION.
THESE PLANS MAY NOT SHOW ALL UTILITIES OR THE CORRECT LOCATIONS.

10TH AND N SEWER UPGRADE - PHASE 2

PROJECT P21067

City of Springfield

PUBLIC WORKS / ENGINEERING
225 FIFTH STREET, SPRINGFIELD, OR 97477
PHONE (541) 726-3753 FAX (541) 736-1021
INTERNET www.ci.springfield.or.gov

REGISTERED PROFESSIONAL ENGINEER 59,604 OREGON JAN 12, 1999 KENNETH JAY VOGENEY

Kenneth J. Vogeney 7/10/13

EXPIRES 6/30/14

SHEET

11B

(1) SAWCUT. SEE CITY OF SPRINGFIELD STANDARD DETAIL 4–16 (TYP).

(2) REMOVE MAX 6' WIDTH OF AC. INSTALL SEWER PIPE AND REPLACE AC WITH LANE COUNTY APPROVED LEVEL 2 "C" MIX. SEE CITY OF SPRINGFIELD STANDARD DETAIL 4–17.

(5) APPROXIMATE LOCATION OF WATER LINE TO REMAIN AND PROTECT (TYP).

(6) APPROXIMATE LOCATION OF GAS LINE TO REMAIN AND PROTECT (TYP).

(9) INSTALL STANDARD 48" MANHOLE, SEE CITY OF SPRINGFIELD STANDARD DETAIL 4–1. MANHOLE RIMS ARE APPROXIMATE. ADJUST MANHOLE TO FINISH GRADE.

(11) EXISTING STORM DRAINAGE PIPE TO BE PRESERVED. ALL DAMAGE TO EXISTING UTILITIES DURING CONSTRUCTION SHALL BE PAID FOR BY CONTRACTOR AND WILL NOT BE REIMBURSED BY CITY (TYP).

(12) EXISTING CURB INLET OR CATCH BASIN TO BE PRESERVED. ALL DAMAGE TO EXISTING UTILITIES DURING CONSTRUCTION SHALL BE PAID FOR BY CONTRACTOR AND WILL NOT BE REIMBURSED BY CITY (TYP).

(13) EXISTING SANITARY SEWER PIPE TO BE PRESERVED. ALL DAMAGE TO EXISTING UTILITIES DURING CONSTRUCTION SHALL BE PAID FOR BY CONTRACTOR AND WILL NOT BE REIMBURSED BY CITY (TYP).

(21) INSTALL CDF IN TOP 2 FEET OF TRENCH UNDER ASPHALT.

(24) INSTALL CONSTRUCTION ENTRANCE, SEE CLEAN WATER SERVICES CONSTRUCTION ENTRANCE DETAIL ON SHEET 4B.

(37) INSTALL 18" PVC ASTM F 679 PIPE(TYP).

No.	Revision/Issue	Date

NOTE:

UTILITY LOCATIONS ARE APPROXIMATE
DO NOT
SCALE OR LOCATE UTILITY LINES OR MAINS FROM THESE DRAWINGS
CALL FOR UTILITY LOCATES
1-800-332-2344

THE CONTRACTOR SHALL BE RESPONSIBLE FOR DETERMINING UTILITY LOCATIONS PRIOR TO BEGINNING OF CONSTRUCTION. THESE PLANS MAY NOT SHOW ALL UTILITIES OR THE CORRECT LOCATIONS.

10TH AND N SEWER UPGRADE - PHASE 2

PROJECT P21067

City of Springfield
PUBLIC WORKS / ENGINEERING
225 FIFTH STREET, SPRINGFIELD, OR 97477
PHONE (541) 726-3753 FAX (541) 736-1021
INTERNET www.ci.springfield-or.gov

REGISTERED PROFESSIONAL ENGINEER
59,604
Kenneth J. Vogeney 7/01/13
OREGON
JAN 12, 1999
KENNETH JAY VOGENEY

EXPIRES 6/30/14

SHEET

12A

See Sheet 11

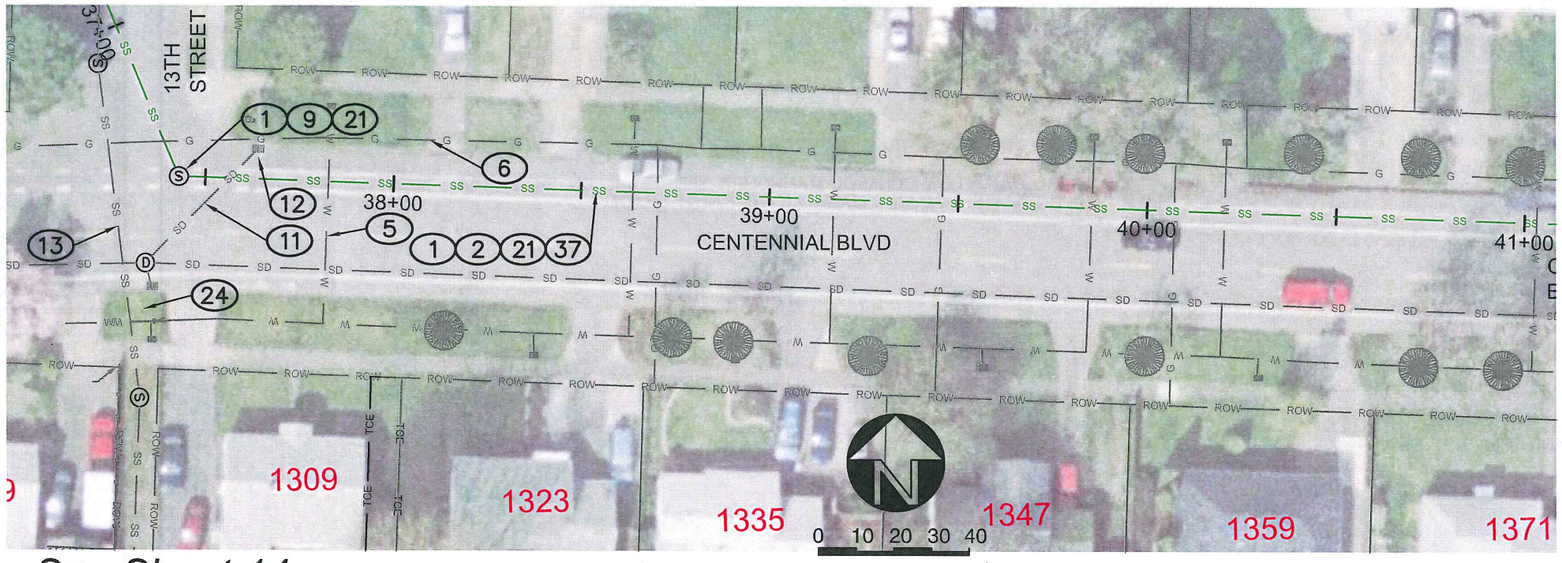

See Sheet 13

See Sheet 14

Line B STA. 37+00-41+00

Scale 1" = 40'

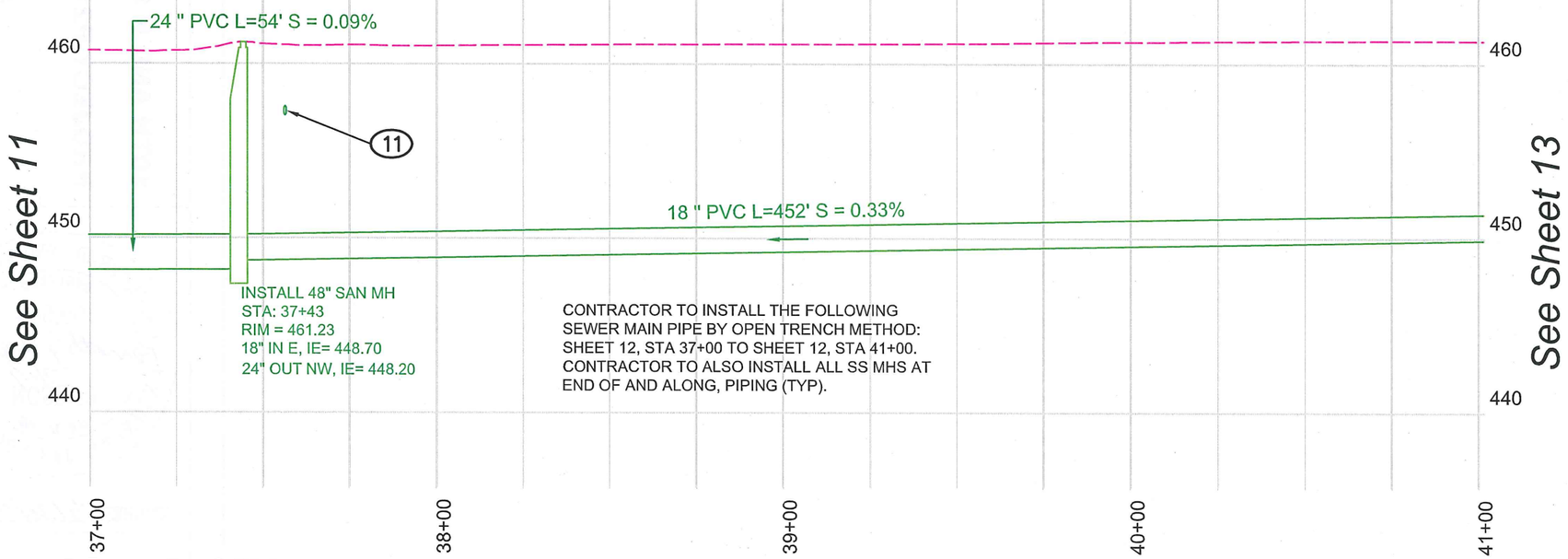

See Sheet 11

See Sheet 13

Line B STA. 37+00-41+00

Scale 1" = 40'

No.	Revision/Issue	Date

NOTE:

UTILITY LOCATIONS ARE APPROXIMATE
DO NOT
SCALE OR LOCATE UTILITY LINES OR MAINS
FROM THESE DRAWINGS
CALL FOR UTILITY LOCATES
1-800-332-2344

THE CONTRACTOR SHALL BE RESPONSIBLE FOR DETERMINING UTILITY LOCATIONS PRIOR TO BEGINNING OF CONSTRUCTION.
THESE PLANS MAY NOT SHOW ALL UTILITIES OR THE CORRECT LOCATIONS.

10TH AND N SEWER UPGRADE - PHASE 2

PROJECT P21067

City of Springfield
PUBLIC WORKS / ENGINEERING
225 FIFTH STREET, SPRINGFIELD, OR 97477
PHONE (541) 726-3753 FAX (541) 736-1021
INTERNET www.ci.springfield.or.gov

REGISTERED PROFESSIONAL ENGINEER
59,604
Kenneth J Vogeney 7/10/13
OREGON
JAN 12, 1999
KENNETH JAY VOGENEY

EXPIRES 6/30/14

SHEET

12B

(1) SAWCUT. SEE CITY OF SPRINGFIELD STANDARD DETAIL 4–16 (TYP).

(2) REMOVE MAX 6' WIDTH OF AC. INSTALL SEWER PIPE AND REPLACE AC WITH LANE COUNTY APPROVED LEVEL 2 "C" MIX. SEE CITY OF SPRINGFIELD STANDARD DETAIL 4–17.

(6) APPROXIMATE LOCATION OF GAS LINE TO REMAIN AND PROTECT (TYP).

(11) EXISTING STORM DRAINAGE PIPE TO BE PRESERVED. ALL DAMAGE TO EXISTING UTILITIES DURING CONSTRUCTION SHALL BE PAID FOR BY CONTRACTOR AND WILL NOT BE REIMBURSED BY CITY (TYP).

(21) INSTALL CDF IN TOP 2 FEET OF TRENCH UNDER ASPHALT.

(33) REMOVE AND REPLACE EXISTING SIDEWALK PER CITY OF SPRINGFIELD STANDARD DETAIL 3–12.

(34) SEE SHEET 16B FOR STORM STRUCTURE RELOCATIONS.

(37) INSTALL 18" PVC ASTM F 679 PIPE(TYP).

(38) INSTALL 72" FLOW CONTROL MANHOLE. SEE DETAIL ON SHEET 15A. MANHOLE RIMS ARE APPROXIMATE. ADJUST MANHOLE TO FINISH GRADE.

No.	Revision/Issue	Date

NOTE:

UTILITY LOCATIONS ARE APPROXIMATE
DO NOT
SCALE OR LOCATE UTILITY LINES OR MAINS FROM THESE DRAWINGS
CALL FOR UTILITY LOCATES
1-800-332-2344

THE CONTRACTOR SHALL BE RESPONSIBLE FOR DETERMINING UTILITY LOCATIONS PRIOR TO BEGINNING OF CONSTRUCTION.
THESE PLANS MAY NOT SHOW ALL UTILITIES OR THE CORRECT LOCATIONS.

10TH AND N SEWER UPGRADE - PHASE 2

PROJECT P21067

City of Springfield
PUBLIC WORKS / ENGINEERING
225 FIFTH STREET, SPRINGFIELD, OR 97477
PHONE (541) 726–3753 FAX (541) 736–1021
INTERNET www.ci.springfield–or.gov

REGISTERED PROFESSIONAL ENGINEER
59,604
Kenneth J Vogeney 7/10/13
OREGON
JAN 12, 1999
KENNETH JAY VOGENEY

EXPIRES 6/30/14

SHEET

13A

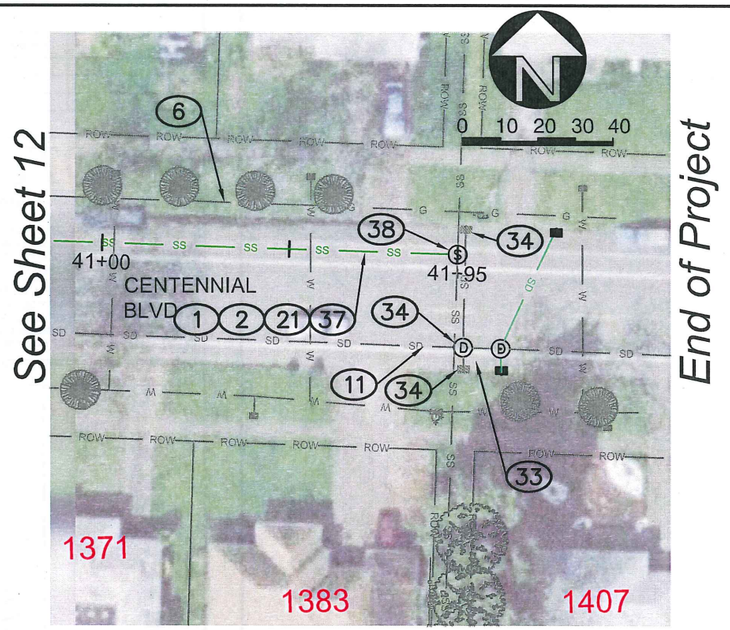

Line B STA. 41+00-41+93

Scale 1" = 40'

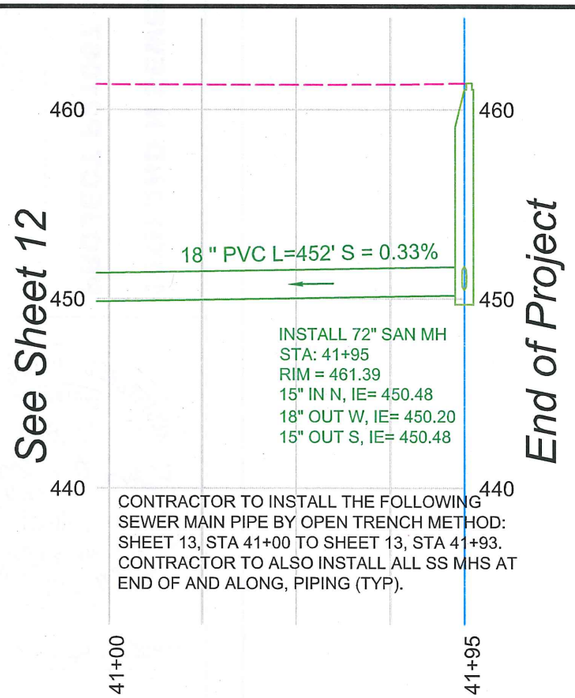

Line B STA. 41+00-41+93

Scale 1" = 40'

No.	Revision/Issue	Date

NOTE:

UTILITY LOCATIONS ARE APPROXIMATE
DO NOT
SCALE OR LOCATE UTILITY LINES OR MAINS
FROM THESE DRAWINGS
CALL FOR UTILITY LOCATES
1-800-332-2344

THE CONTRACTOR SHALL BE RESPONSIBLE FOR DETERMINING UTILITY LOCATIONS PRIOR TO BEGINNING OF CONSTRUCTION.
THESE PLANS MAY NOT SHOW ALL UTILITIES OR THE CORRECT LOCATIONS.

10TH AND N SEWER UPGRADE - PHASE 2

PROJECT P21067

City of Springfield
PUBLIC WORKS / ENGINEERING
225 FIFTH STREET, SPRINGFIELD, OR 97477
PHONE (541) 726-3753 FAX (541) 736-1021
INTERNET www.ci.springfield.or.gov

REGISTERED PROFESSIONAL ENGINEER
59,604
Kenneth J. Vogeney 2/10/13
OREGON
JAN 12, 1999
KENNETH JAY VOGENEY

EXPIRES 6/30/14

SHEET
13B

(13) EXISTING SANITARY SEWER PIPE TO BE PRESERVED. ALL DAMAGE TO EXISTING UTILITIES DURING CONSTRUCTION SHALL BE PAID FOR BY CONTRACTOR AND WILL NOT BE REIMBURSED BY CITY (TYP).

(16) REMOVE EXISTING FENCE TO ALLOW FOR INSTALLATION OF NEW SANITARY SEWER. FENCE SHALL BE REPLACED WITH EXISTING OR NEW AS NEEDED PER ENGINEER.

(17) EXISTING POWER POLE TO BE HELD BY SUB ELECTRIC. SEE SPECIAL PROVISIONS FOR MORE INFORMATION ON COORDINATION WITH SUB ELECTRIC FOR POLE HOLDING.

(32) REMOVE EXISTING STRUCTURE AND REPLACE WITH NEW 72" FLOW CONTROL MANHOLE. SEE DETAIL ON SHEET 14C FOR MORE INFORMATION. MANHOLE RIMS ARE APPROXIMATE. ADJUST MANHOLE TO FINISH GRADE.

No.	Revision/Issue	Date

NOTE:

UTILITY LOCATIONS ARE APPROXIMATE
DO NOT
SCALE OR LOCATE UTILITY LINES OR MAINS FROM THESE DRAWINGS
CALL FOR UTILITY LOCATES
1-800-332-2344

THE CONTRACTOR SHALL BE RESPONSIBLE FOR DETERMINING UTILITY LOCATIONS PRIOR TO BEGINNING OF CONSTRUCTION.
THESE PLANS MAY NOT SHOW ALL UTILITIES OR THE CORRECT LOCATIONS.

10TH AND N SEWER UPGRADE - PHASE 2

PROJECT P21067

City of Springfield
PUBLIC WORKS / ENGINEERING
225 FIFTH STREET, SPRINGFIELD, OR 97477
PHONE (541) 726-3753 FAX (541) 736-1021
INTERNET www.ci.springfield-or.gov

REGISTERED PROFESSIONAL ENGINEER
59,604
Kenneth J. Vogeney 7/10/13
OREGON
JAN 12, 1999
KENNETH JAY VOGENEY

EXPIRES 6/30/14

SHEET
14A

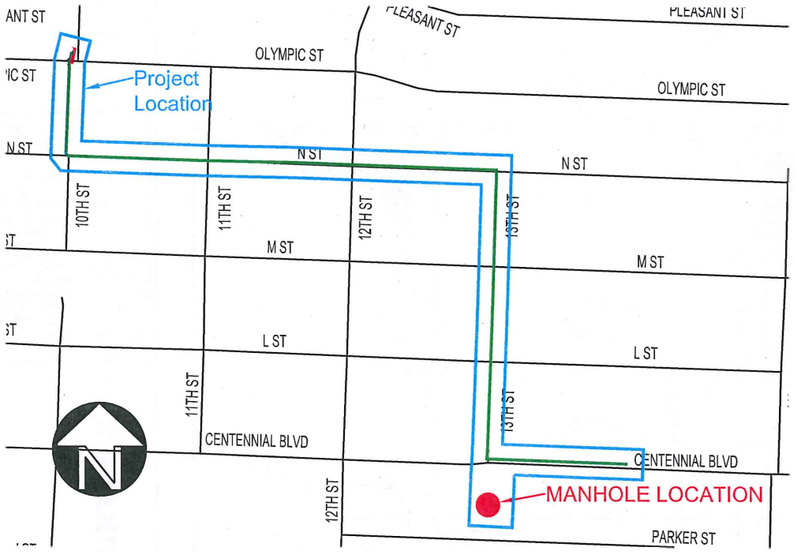

Scale 1" = 500'

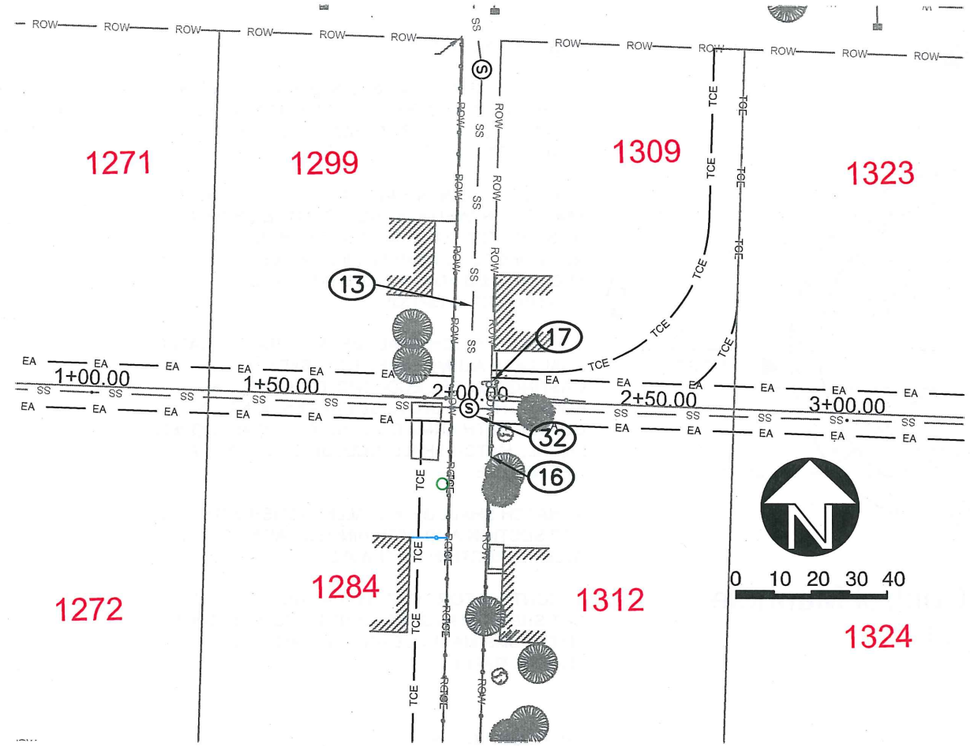

Scale 1" = 40'

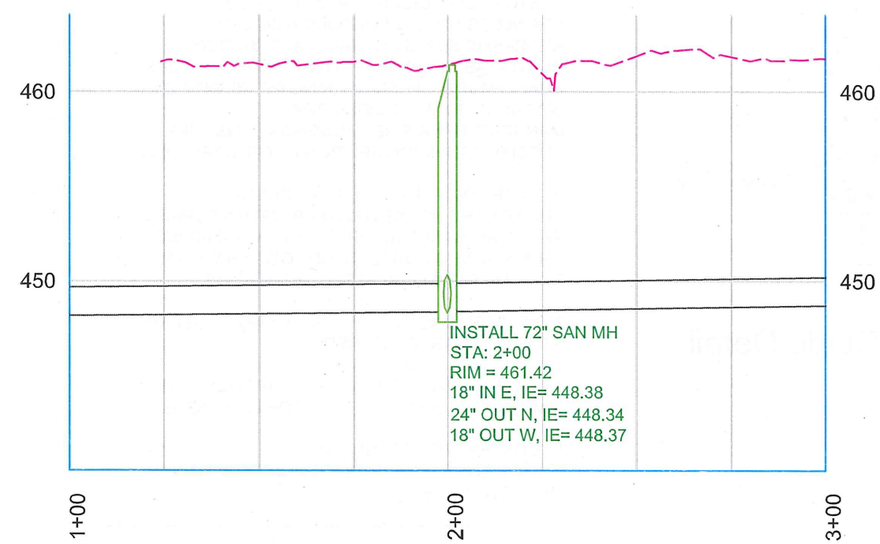

CONTRACTOR TO INSTALL THE FOLLOWING SEWER MANHOLE BY OPEN TRENCH METHOD: SHEET 14, STA 2+00.

Scale 1" = 40'

No.	Revision/Issue	Date

NOTE:

UTILITY LOCATIONS ARE APPROXIMATE
DO NOT
SCALE OR LOCATE UTILITY LINES OR MAINS FROM THESE DRAWINGS
CALL FOR UTILITY LOCATES
1-800-332-2344

THE CONTRACTOR SHALL BE RESPONSIBLE FOR DETERMINING UTILITY LOCATIONS PRIOR TO BEGINNING OF CONSTRUCTION.
THESE PLANS MAY NOT SHOW ALL UTILITIES OR THE CORRECT LOCATIONS.

10TH AND N SEWER UPGRADE - PHASE 2

PROJECT P21067

City of Springfield
PUBLIC WORKS / ENGINEERING
225 FIFTH STREET, SPRINGFIELD, OR 97477
PHONE (541) 726-3753 FAX (541) 736-1021
INTERNET www.ci.springfield.or.gov

REGISTERED PROFESSIONAL ENGINEER
59,604
OREGON
JAN 12, 1999
KENNETH JAY VOGENEY

Kenneth J. Vogeney 7/10/13

EXPIRES 6/30/14

SHEET

14B

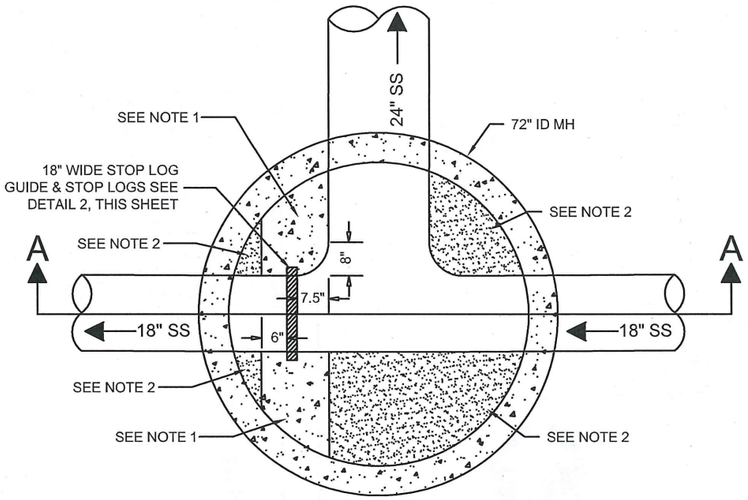

Detail 1 - Flow Control Manhole PLAN

SCALE: 1" = 3'

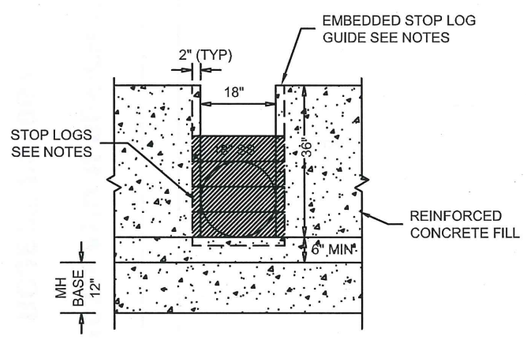

Detail 2 - Stop Log Guide Detail

SCALE: 1" = 3'

MANHOLE NOTES:

1. CONCRETE FILL, #4 REBAR @ 6" ON CENTER EACH WAY, ALL EXPOSED FACES MAINTAIN 2" CLEAR FROM CONCRETE SURFACE (TYP). CLASS 3500 - I CONCRETE.

2. FILL SPACE W/ NON-SHRINK GROUT. CREATE SMOOTH TRANSITION FROM SQUARE CHANNEL AT STOP LOG GUIDE TO ROUND CHANNEL. REINFORCED CONCRETE FILL CAN BE SUBSTITUTED FOR NON-SHRINK GROUT AT CONTRACTORS OPTION.

3. ACCESS HATCH SHALL BE H-20 TRAFFIC RATED DUAL LEAF ALUMINUM HATCH, SYRACUSE CASTINGS MODEL ECD-15HD, OR APPROVED EQUAL.. HATCH SHALL BE PROFESSIONALLY COATED WITH ARMA COATING 952 OR APPROVED EQUAL. HATCH SHALL INCLUDE SLAM LOCK AND LIFT HANDLE.

4. HATCH SHALL BE INSTALLED FLUSH WITH FLAT TOP SECTION AND WITH HINGES PARALLEL TO ALLEY DIRECTION OF TRAVEL.

5. CONTRACTOR TO SUBMIT MANUFACTURERS CUT SHEET WITH SUFFICIENT DOCUMENTATION TO ENSURE MANHOLE AND HATCH IS H-20 TRAFFIC RATED.

STOP LOG NOTES:

1. STOP LOG GUIDES SHALL BE TYPE 316 STAINLESS STEEL EMBEDDED GUIDE WITH NEOPRENE SEALS, AS MANUFACTURED BY PLASTI-FAB INC, OR APPROVED EQUAL. GUIDES SHALL HAVE A CLEAR OPENING OF 18" WIDE BY 36" TALL. INSTALL GUIDES PER MANUFACTURER'S RECOMMENDATIONS. SEE SPECIAL PROVISION SECTION K FOR MORE INFO.

2. STOP LOGS SHALL BE FIBERGLASS REINFORCED POLYESTER (FRP) WITH NEOPRENE SEALS, AS MANUFACTURED BY PLASTI-FAB INC, OR APPROVED EQUAL. STOP LOGS SHALL HAVE TYPE 316 STAINLESS STEEL LIFTING PINS.

3. PROVIDE ONE DUAL HOOK LIFTING POLE FROM STOP LOG MANUFACTURER.

4. PROVIDE THE FOLLOWING STOP LOGS IN THE DIMENSIONS SHOWN IN THE STOP LOG TABLE.

5. CONTRACTOR TO INSTALL 4 - 6", 1 - 5" AND 1 - 3" STOP LOGS IN MANHOLE PRIOR TO ALLOWING LIVE SEWERAGE.

STOP LOG TABLE

QTY	LENGTH*	HEIGHT	THICKNESS
2	18"	3"	2.5"
3	18"	5"	2.5"
4	18"	6"	2.5"

* LENGTH IS CLEAR OPENING LENGTH. FURNISH TOTAL LENGTH PER MANUFACTURER REQUIREMENTS.

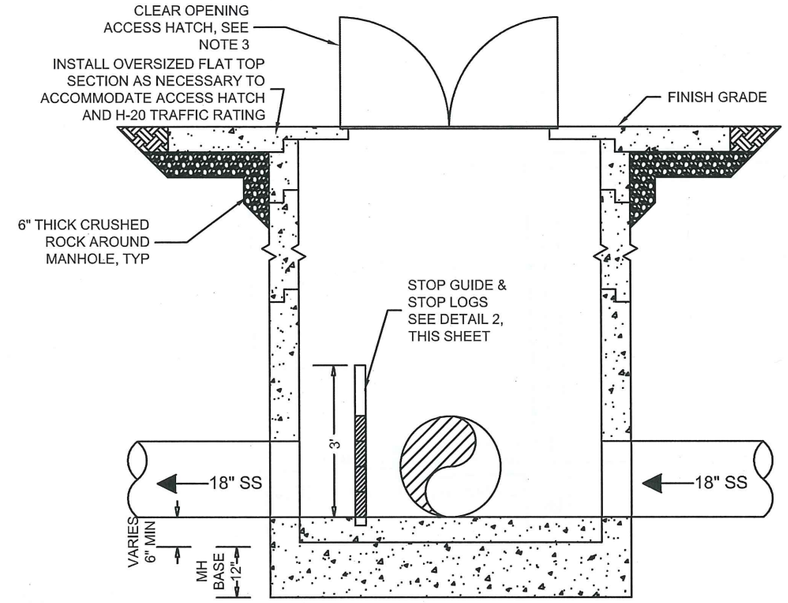

Section A-A Flow Control Manhole Structure

SCALE: 1" = 3'

MH SOUTH OF 13TH AND CENTENNIAL IN ALLEY SEE SHEET 14B

No.	Revision/Issue	Date

NOTE:

UTILITY LOCATIONS ARE APPROXIMATE
DO NOT
SCALE OR LOCATE UTILITY LINES OR MAINS FROM THESE DRAWINGS
CALL FOR UTILITY LOCATES
1-800-332-2344

THE CONTRACTOR SHALL BE RESPONSIBLE FOR DETERMINING UTILITY LOCATIONS PRIOR TO BEGINNING OF CONSTRUCTION.
THESE PLANS MAY NOT SHOW ALL UTILITIES OR THE CORRECT LOCATIONS.

10TH AND N SEWER UPGRADE - PHASE 2

PROJECT P21067

City of Springfield
PUBLIC WORKS / ENGINEERING
225 FIFTH STREET, SPRINGFIELD, OR 97477
PHONE (541) 726-3753 FAX (541) 736-1021
INTERNET www.ci.springfield.or.gov

REGISTERED PROFESSIONAL ENGINEER 59,604 OREGON JAN 12, 1999 KENNETH JAY VOGENEY

Kenneth J. Vogeney 3/10/13

EXPIRES 6/30/14

SHEET

14C

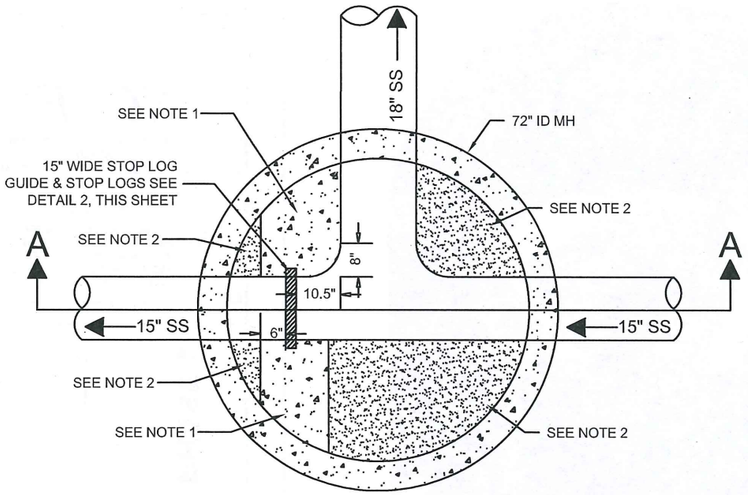

Detail 1 - Flow Control Manhole PLAN

SCALE: 1" = 3'

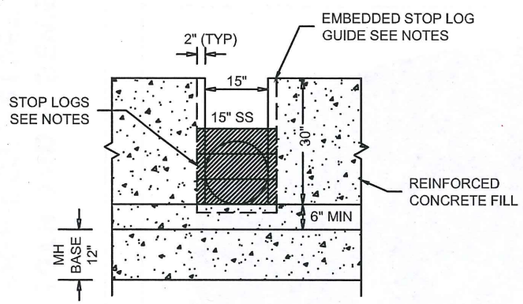

Detail 2 - Stop Log Guide Detail

SCALE: 1" = 3'

MANHOLE NOTES:

1. CONCRETE FILL, #4 REBAR @ 6" ON CENTER EACH WAY, ALL EXPOSED FACES MAINTAIN 2" CLEAR FROM CONCRETE SURFACE (TYP). CLASS 3500 - I CONCRETE.

2. FILL SPACE W/ NON-SHRINK GROUT. CREATE SMOOTH TRANSITION FROM SQUARE CHANNEL AT STOP LOG GUIDE TO ROUND CHANNEL. REINFORCED CONCRETE FILL CAN BE SUBSTITUTED FOR NON-SHRINK GROUT AT CONTRACTORS OPTION.

3. ACCESS HATCH SHALL BE H-20 TRAFFIC RATED DUAL LEAF ALUMINUM HATCH, SYRACUSE CASTINGS MODEL ECD-15HD, OR APPROVED EQUAL. HATCH SHALL BE PROFESSIONALLY COATED WITH ARMA COATING 952 OR APPROVED EQUAL. HATCH SHALL INCLUDE SLAM LOCK AND LIFT HANDLE.

4. HATCH SHALL BE INSTALLED FLUSH WITH FLAT TOP SECTION AND WITH HINGES PARALLEL TO DIRECTION OF TRAVEL IN BIKE LANE.

5. CONTRACTOR TO SUBMIT MANUFACTURERS CUT SHEET WITH SUFFICIENT DOCUMENTATION TO ENSURE MANHOLE AND HATCH IS H-20 TRAFFIC RATED.

STOP LOG NOTES:

1. STOP LOG GUIDES SHALL BE TYPE 316 STAINLESS STEEL EMBEDDED GUIDE WITH NEOPRENE SEALS, AS MANUFACTURED BY PLASTI-FAB INC, OR APPROVED EQUAL. GUIDES SHALL HAVE A CLEAR OPENING OF 18" WIDE BY 36" TALL. INSTALL GUIDES PER MANUFACTURER'S RECOMMENDATIONS. SEE SPECIAL PROVISION SECTION K FOR MORE INFO.

2. STOP LOGS SHALL BE FIBERGLASS REINFORCED POLYESTER (FRP) WITH NEOPRENE SEALS, AS MANUFACTURED BY PLASTI-FAB INC, OR APPROVED EQUAL. STOP LOGS SHALL HAVE TYPE 316 STAINLESS STEEL LIFTING PINS.

3. PROVIDE ONE DUAL HOOK LIFTING POLE FROM STOP LOG MANUFACTURER.

4. PROVIDE THE FOLLOWING STOP LOGS IN THE DIMENSIONS SHOWN IN THE STOP LOG TABLE.

5. CONTRACTOR TO INSTALL 3 - 6" AND 2 - 3" STOP LOGS IN MANHOLE PRIOR TO ALLOWING LIVE SEWERAGE.

STOP LOG TABLE

QTY	LENGTH*	HEIGHT	THICKNESS
2	15"	3"	2.5"
3	15"	5"	2.5"
3	15"	6"	2.5"

* LENGTH IS CLEAR OPENING LENGTH. FURNISH TOTAL LENGTH PER MANUFACTURER REQUIREMENTS.

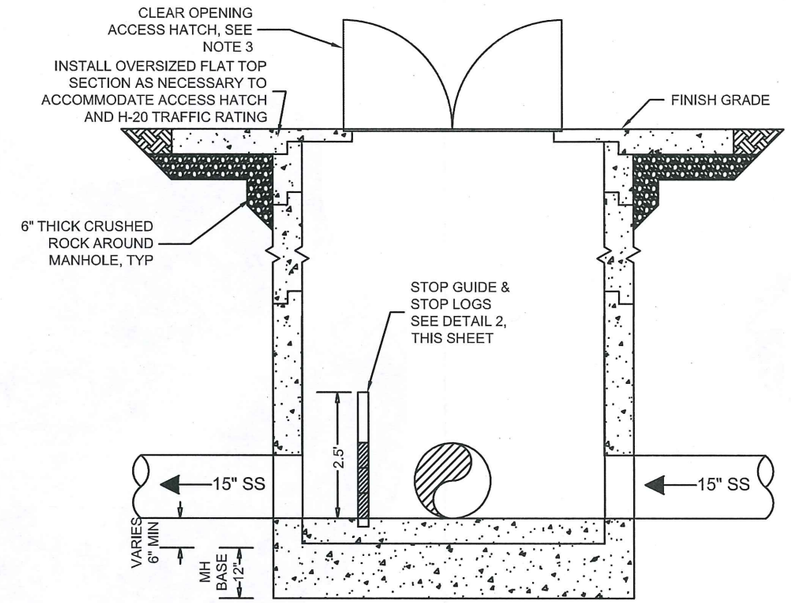

Section A-A Flow Control Manhole Structure

SCALE: 1" = 3'

CENTENNIAL BOULEVARD MANHOLE STA. 41+95

SEE SHEET 13B

No.	Revision/Issue	Date

NOTE:

UTILITY LOCATIONS ARE APPROXIMATE
DO NOT
SCALE OR LOCATE UTILITY LINES OR MAINS FROM THESE DRAWINGS
CALL FOR UTILITY LOCATES
1-800-332-2344

THE CONTRACTOR SHALL BE RESPONSIBLE FOR DETERMINING UTILITY LOCATIONS PRIOR TO BEGINNING OF CONSTRUCTION.
THESE PLANS MAY NOT SHOW ALL UTILITIES OR THE CORRECT LOCATIONS.

10TH AND N SEWER UPGRADE - PHASE 2

PROJECT P21067

City of Springfield
PUBLIC WORKS / ENGINEERING
225 FIFTH STREET, SPRINGFIELD, OR 97477
PHONE (541) 726-3753 FAX (541) 736-1021
INTERNET www.ci.springfield.or.gov

REGISTERED PROFESSIONAL ENGINEER 59,604 OREGON JAN 12, 1999 KENNETH JAY VOGENEY

EXPIRES 6/30/14

SHEET

15A

10th & 'N'

STA 13+84

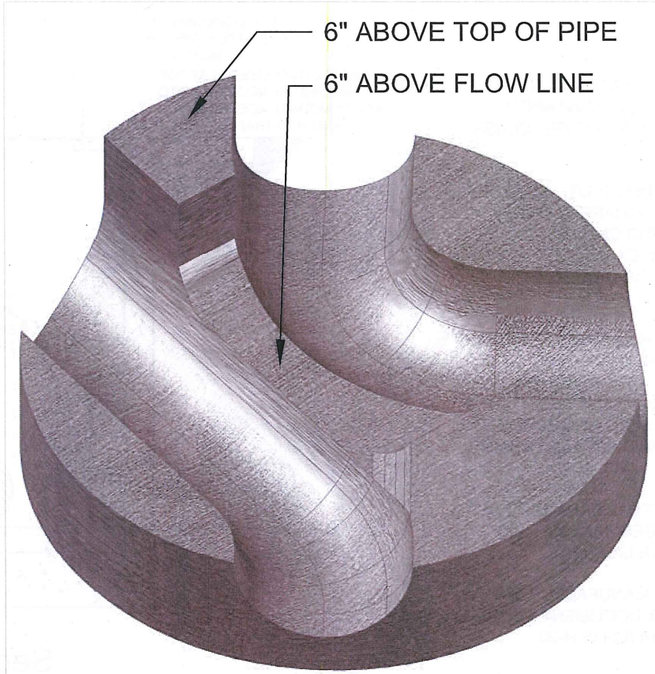

MH BASE

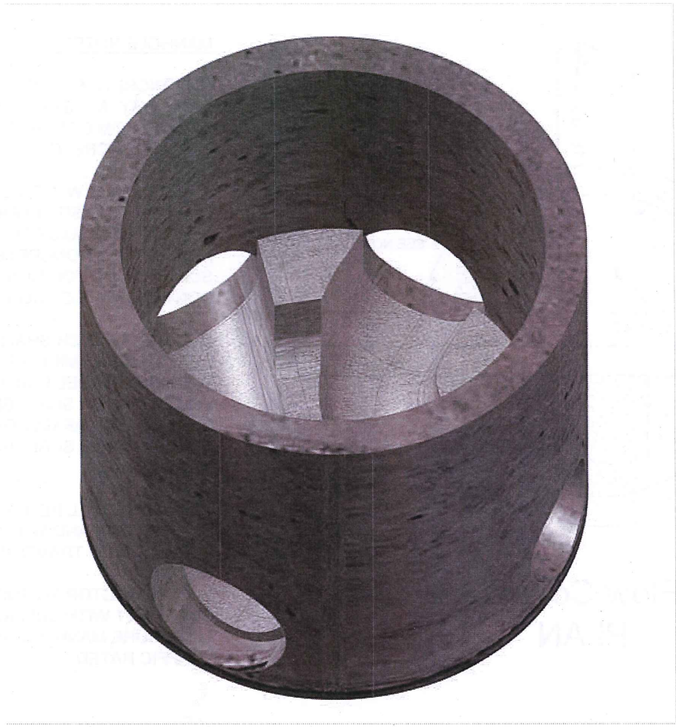

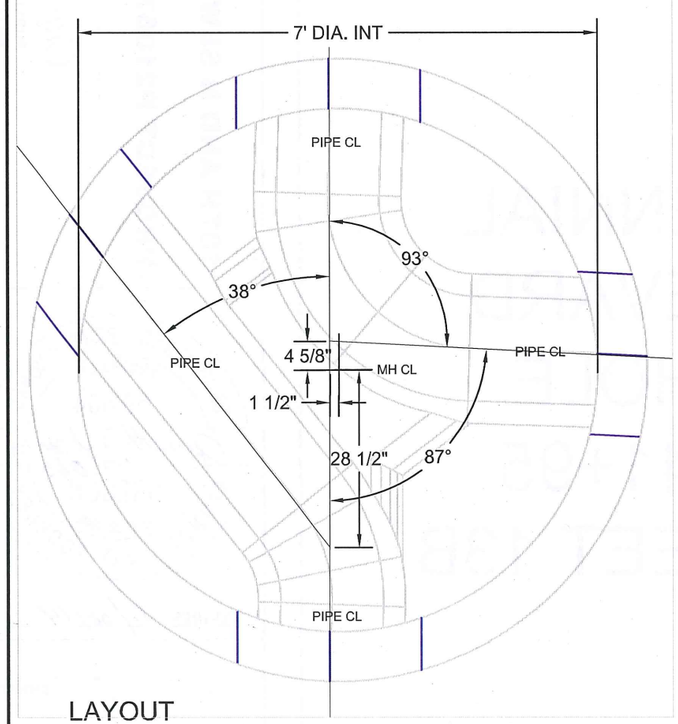

LAYOUT

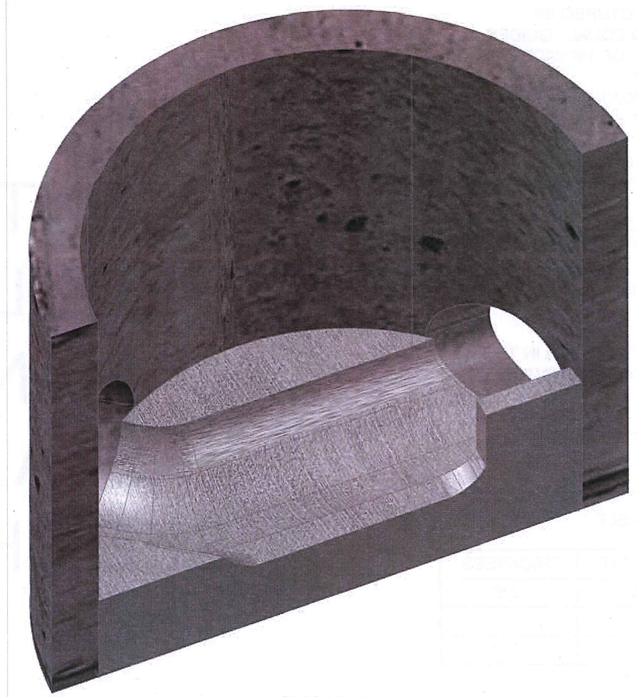

SW HALF

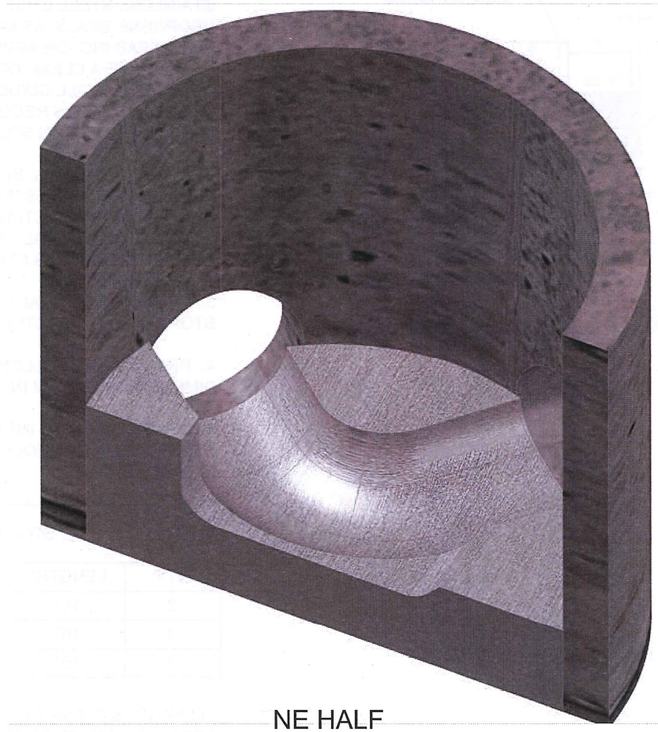

NE HALF

No.	Revision/Issue	Date

NOTE:

UTILITY LOCATIONS ARE APPROXIMATE
DO NOT
SCALE OR LOCATE UTILITY LINES OR MAINS
FROM THESE DRAWINGS
CALL FOR UTILITY LOCATES
1-800-332-2344

THE CONTRACTOR SHALL BE RESPONSIBLE FOR DETERMINING UTILITY LOCATIONS PRIOR TO BEGINNING OF CONSTRUCTION.
THESE PLANS MAY NOT SHOW ALL UTILITIES OR THE CORRECT LOCATIONS.

10TH AND N SEWER UPGRADE - PHASE 2
PROJECT P21067

City of Springfield
PUBLIC WORKS / ENGINEERING
225 FIFTH STREET, SPRINGFIELD, OR 97477
PHONE (541) 726-3753 FAX (541) 736-1021
INTERNET www.ci.springfield.or.us

REGISTERED PROFESSIONAL ENGINEER
59804PE
OREGON
JANUARY 13, 1998
KENNETH JAY VOGENEY
Kenneth J. Vogeney 2/10/13
RENEWAL DATE: 12/31/14

Scale

SHEET 15B OF ___

13th & CENTENIAL

STA 36+89

TOP VIEW

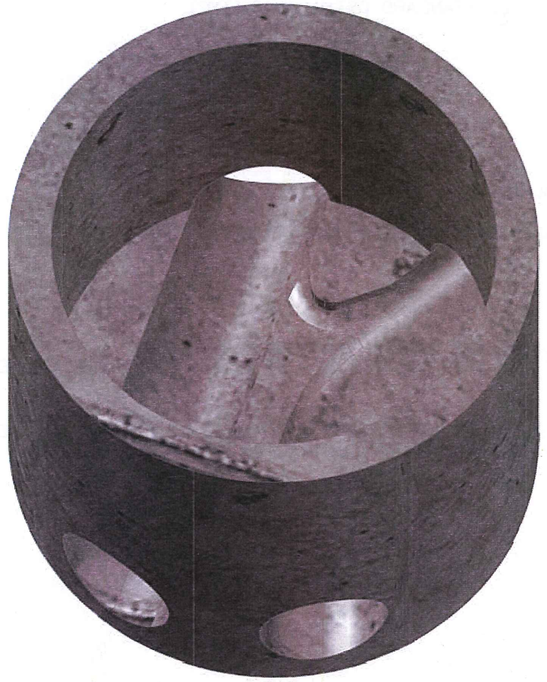

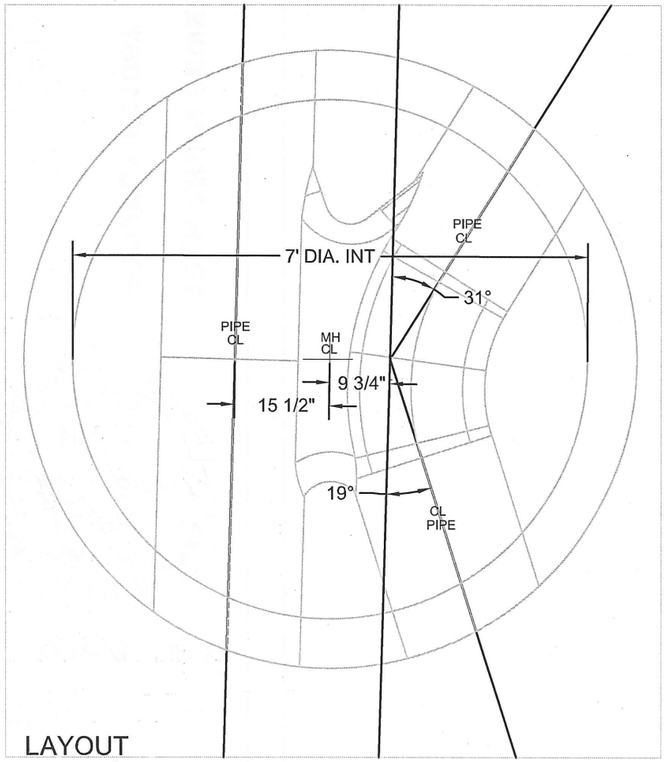

LAYOUT

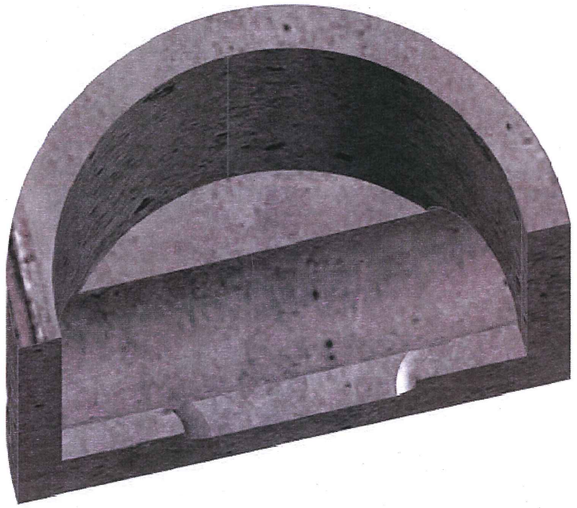

WEST HALF

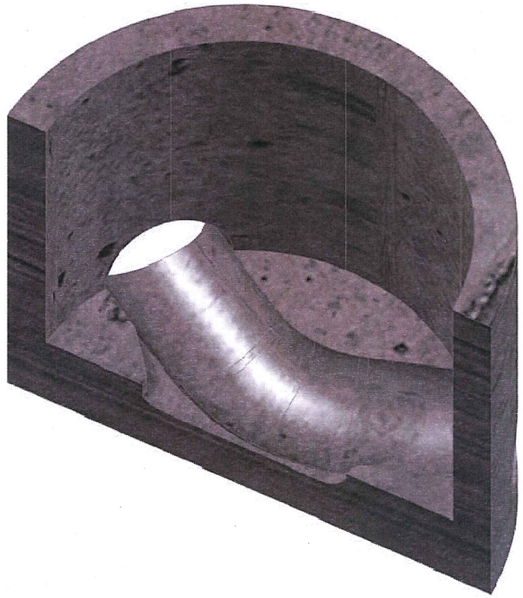

EAST HALF

No.	Revision/Issue	Date

NOTE:

UTILITY LOCATIONS ARE APPROXIMATE
DO NOT
SCALE OR LOCATE UTILITY LINES OR MAINS
FROM THESE DRAWINGS
CALL FOR UTILITY LOCATES
1-800-332-2344

THE CONTRACTOR SHALL BE RESPONSIBLE FOR DETERMINING UTILITY LOCATIONS PRIOR TO BEGINNING OF CONSTRUCTION.
THESE PLANS MAY NOT SHOW ALL UTILITIES OR THE CORRECT LOCATIONS.

10TH AND N SEWER UPGRADE - PHASE 2
PROJECT P21067

City of Springfield
PUBLIC WORKS / ENGINEERING
225 FIFTH STREET, SPRINGFIELD, OR 97477
PHONE (541) 726-3753 FAX (541) 726-1021
INTERNET www.ci.springfield.or.us

REGISTERED PROFESSIONAL ENGINEER
59604PE
OREGON
JANUARY 12, 1982
KENNETH JAY VOGENEY

Kenneth J. Vogeney 3/6/14

RENEWAL DATE: 6/30/14

Scale

SHEET 15C OF ___

(1) SAWCUT. SEE CITY OF SPRINGFIELD STANDARD DETAIL 4–16 (TYP).

(5) APPROXIMATE LOCATION OF WATER LINE TO REMAIN AND PROTECT (TYP).

(6) APPROXIMATE LOCATION OF GAS LINE TO REMAIN AND PROTECT (TYP).

(9) INSTALL STANDARD 48" MANHOLE, SEE CITY OF SPRINGFIELD STANDARD DETAIL 4–1. MANHOLE RIMS ARE APPROXIMATE. ADJUST MANHOLE TO FINISH GRADE.

(11) EXISTING STORM DRAINAGE PIPE TO BE PRESERVED. ALL DAMAGE TO EXISTING UTILITIES DURING CONSTRUCTION SHALL BE PAID FOR BY CONTRACTOR AND WILL NOT BE REIMBURSED BY CITY (TYP).

(21) INSTALL CDF IN TOP 2 FEET OF TRENCH UNDER ASPHALT.

(36) REMOVE EXISTING STORM MANHOLE TO ACCOMMODATE NEW SANITARY SEWER PIPE.

(39) INSTALL CATCH BASIN. SEE CITY OF SPRINGFIELD STANDARD DETAIL 4–11.

(40) REMOVE EXISTING STORM CATCH BASIN TO ACCOMMODATE NEW SANITARY SEWER PIPE.

(41) REMOVE MAX 6' WIDTH OF AC. INSTALL STORM PIPE AND REPLACE AC WITH LANE COUNTY APPROVED LEVEL 2 "C" MIX. SEE CITY OF SPRINGFIELD STANDARD DETAIL 4–17.

REGISTERED PROFESSIONAL ENGINEER 59604 OREGON JAN 12, 1999 KENNETH JAY VOGENEY

RENEWAL DATE:

No.	Revision/Issue	Date

NOTE:

UTILITY LOCATIONS ARE APPROXIMATE
DO NOT
SCALE OR LOCATE UTILITY LINES OR MAINS FROM THESE DRAWINGS
CALL FOR UTILITY LOCATES
1-800-332-2344

THE CONTRACTOR SHALL BE RESPONSIBLE FOR DETERMINING UTILITY LOCATIONS PRIOR TO BEGINNING OF CONSTRUCTION.
THESE PLANS MAY NOT SHOW ALL UTILITIES OR THE CORRECT LOCATIONS.

10TH AND N SEWER UPGRADE - PHASE 2

PROJECT P21067

City of Springfield
PUBLIC WORKS / ENGINEERING
225 FIFTH STREET, SPRINGFIELD, OR 97477
PHONE (541) 726–3753 FAX (541) 736–1021
INTERNET www.ci.springfield–or.gov

REGISTERED PROFESSIONAL ENGINEER 59,604 OREGON JAN 12, 1999 KENNETH JAY VOGENEY

Kenneth J. Vogeney 1/19/15

EXPIRES 6/30/14

SHEET

16A

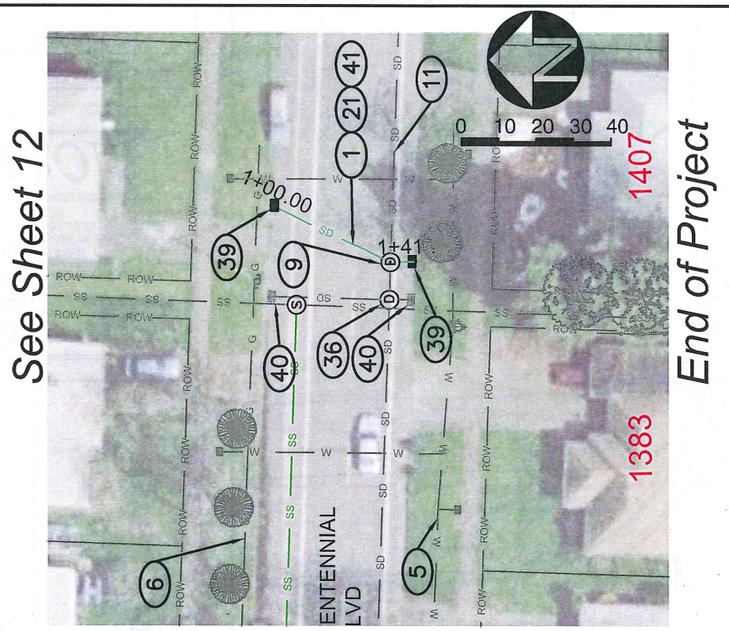

Storm Line STA. 1+00-1+39

Scale 1" = 40'

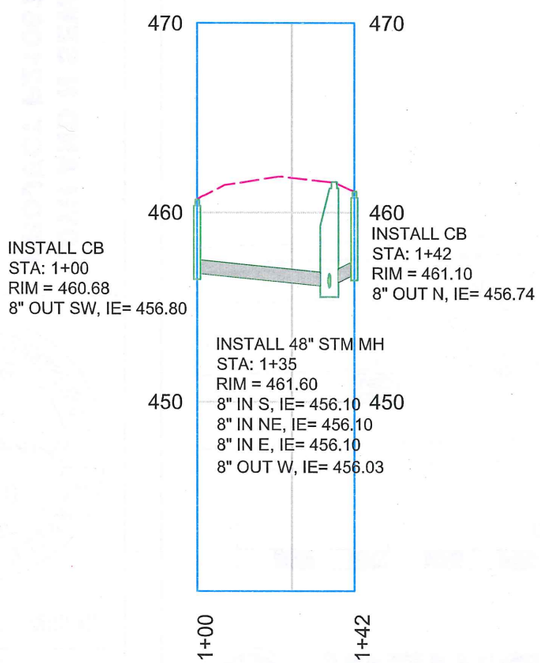

Storm Line STA. 1+00-1+39

Scale 1" = 40'

No.	Revision/Issue	Date

NOTE:

UTILITY LOCATIONS ARE APPROXIMATE
DO NOT
SCALE OR LOCATE UTILITY LINES OR MAINS
FROM THESE DRAWINGS
CALL FOR UTILITY LOCATES
1-800-332-2344

THE CONTRACTOR SHALL BE RESPONSIBLE FOR DETERMINING UTILITY LOCATIONS PRIOR TO BEGINNING OF CONSTRUCTION.
THESE PLANS MAY NOT SHOW ALL UTILITIES OR THE CORRECT LOCATIONS.

10TH AND N SEWER UPGRADE - PHASE 2

PROJECT P21067

City of Springfield

PUBLIC WORKS / ENGINEERING
225 FIFTH STREET, SPRINGFIELD, OR 97477
PHONE (541) 726-3753 FAX (541) 736-1021
INTERNET www.ci.springfield.or.gov

REGISTERED PROFESSIONAL ENGINEER
59,604
Kenneth J. Vogeney 7/10/13
OREGON
JAN 12, 1999
KENNETH JAY VOGENEY

EXPIRES 6/30/14

SHEET

16B

SHEET LAYOUT INDEX

	SHEET
10th & OLYMPIC STREETS VCTY	17
NW 10th & OLYMPIC STREETS	18
NE 10th & OLYMPIC STREETS	19
SW 10th & OLYMPIC STREETS	20
10th & 'N' STREETS VCTY	21
S 10th & 'N' STREETS	21A
N 10th & 'N' STREETS	22
13th & 'N' STREETS VCTY	23
13th & 'N' STREETS	23A
13th & 'M' STREETS	24
13th - N to M Path	24A
13th & 'L' STREETS VCTY	25
S 13th & 'L' STREETS	25A
N 13th & 'L' STREETS	26
13th - M to L Path	26A
10th PEDESTRIAN PATH PLAN & PROF	27
10th PEDESTRIAN PATH SECTION	28
SLURRY SEAL AND STREET RECONSTRUCTION	29

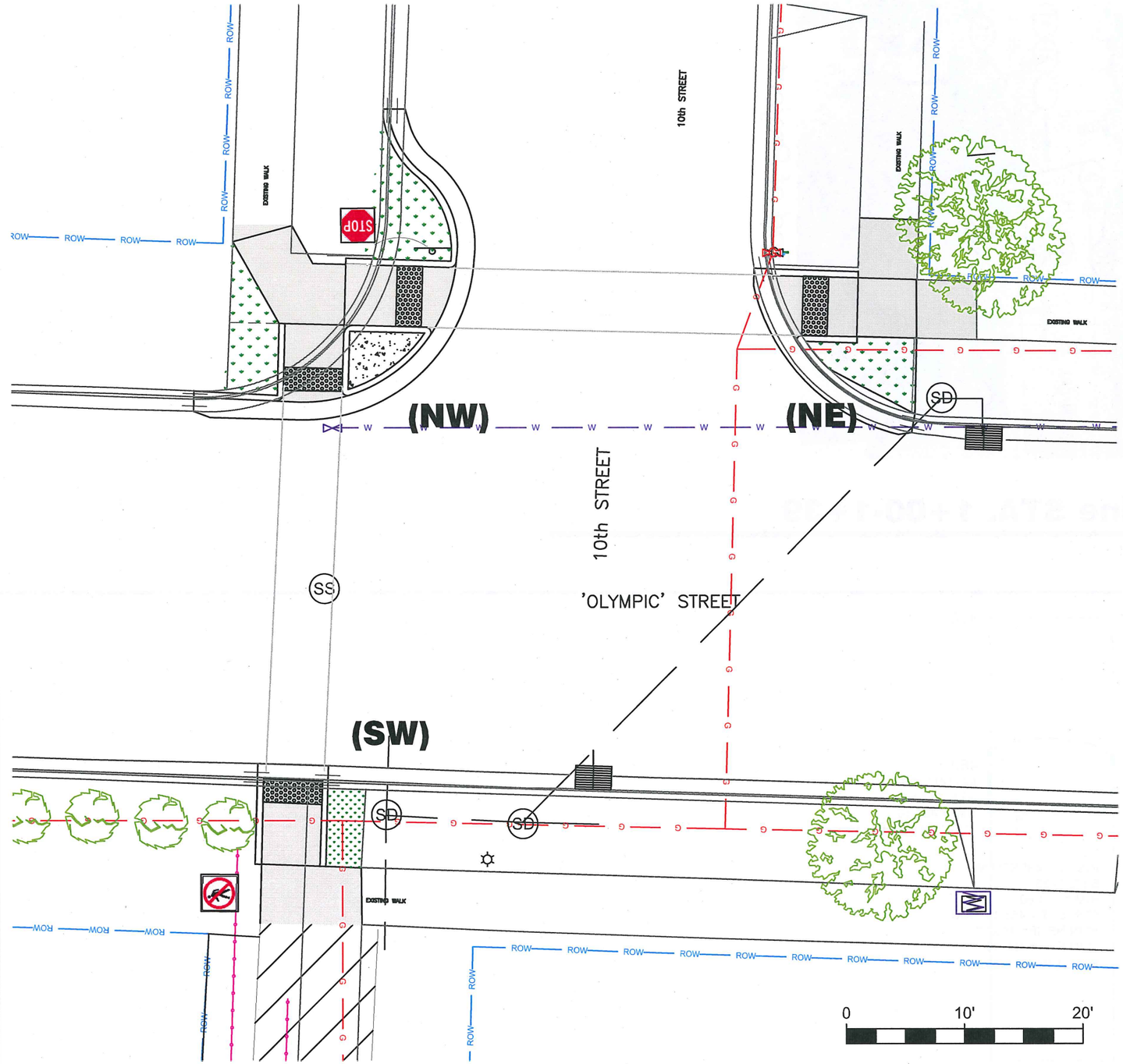

10th & OLYMPIC STREETS OVERVIEW

SCALE: 1"=10'

No.	Revision/Issue	Date
DRAWN: RBK		

NOTE:

UTILITY LOCATIONS ARE APPROXIMATE
DO NOT
SCALE OR LOCATE UTILITY LINES OR MAINS
FROM THESE DRAWINGS
CALL FOR UTILITY LOCATES
811 or (1-800-332-2344)

THE CONTRACTOR SHALL BE RESPONSIBLE FOR DETERMINING UTILITY LOCATIONS PRIOR TO BEGINNING OF CONSTRUCTION.
THESE PLANS MAY NOT SHOW ALL UTILITIES OR THE CORRECT LOCATIONS.

10TH AND N SEWER UPGRADE - PHASE 2
PROJECT P21067

City of Springfield
PUBLIC WORKS / ENGINEERING
225 FIFTH STREET, SPRINGFIELD, OR 97477
PHONE (541) 726-3753 FAX (541) 726-1021
INTERNET www.ci.springfield.or.us

REGISTERED PROFESSIONAL ENGINEER
59,604
Kenneth J. Vogeney 4/10/13
OREGON
JAN 12, 1999
KENNETH JAY VOGENEY

EXPIRES 6/30/14

Scale

SHEET 17

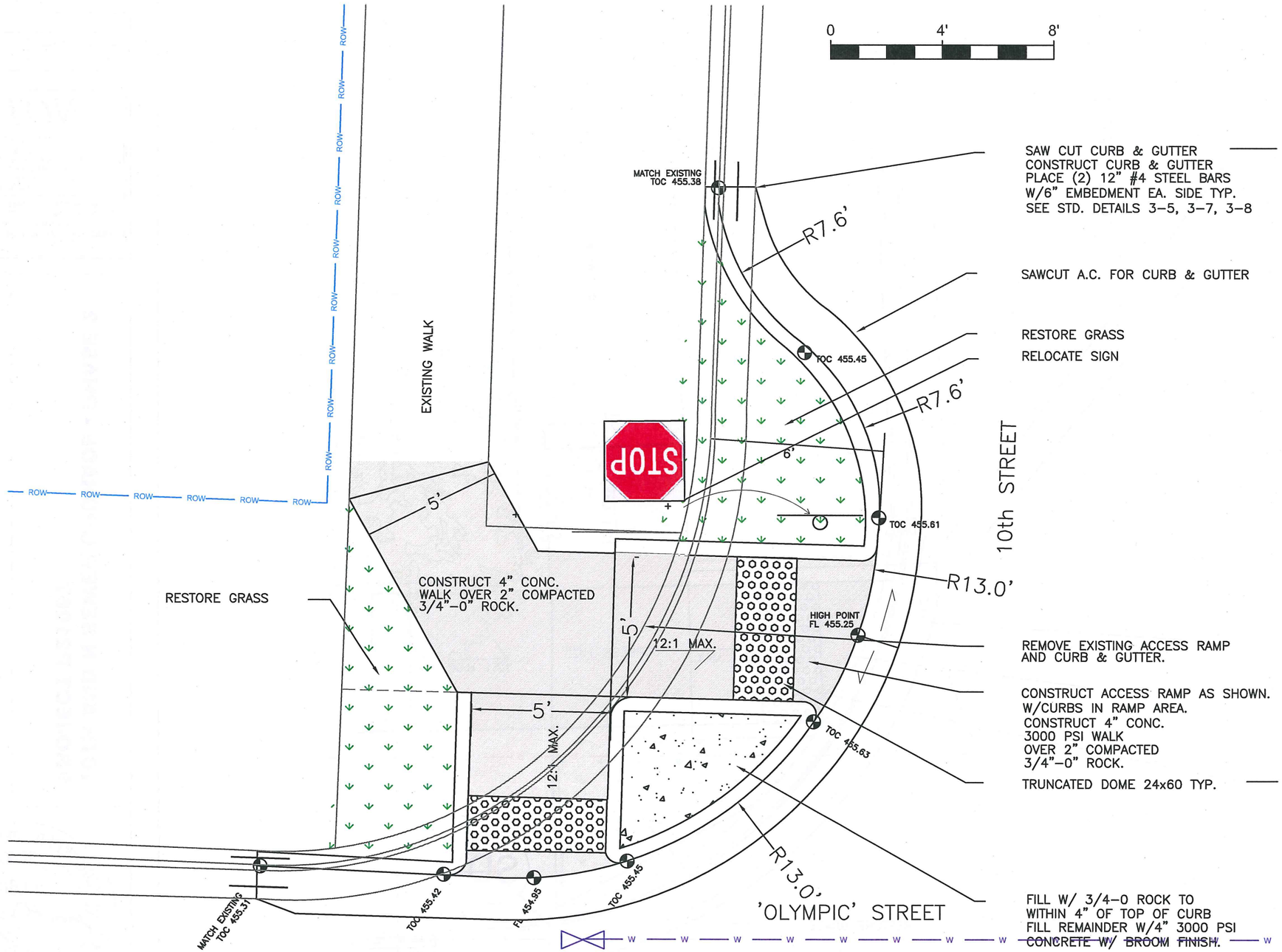

(N.W.) 10th & OLYMPIC STREETS

SCALE: 1"=4'

No.	Revision/Issue	Date
DRAWN: RBK		

NOTE:

UTILITY LOCATIONS ARE APPROXIMATE
DO NOT
SCALE OR LOCATE UTILITY LINES OR MAINS
FROM THESE DRAWINGS
CALL FOR UTILITY LOCATES
811 or (1-800-332-2344)

THE CONTRACTOR SHALL BE RESPONSIBLE
FOR DETERMINING UTILITY LOCATIONS PRIOR TO
BEGINNING OF CONSTRUCTION.
THESE PLANS MAY NOT SHOW ALL UTILITIES OR
THE CORRECT LOCATIONS.

10TH AND N SEWER UPGRADE - PHASE 2
PROJECT P21067

City of Springfield
PUBLIC WORKS / ENGINEERING
225 FIFTH STREET, SPRINGFIELD, OR 97477
PHONE (541) 726-3753 FAX (541) 736-1021
INTERNET www.ci.springfield.or.us

REGISTERED PROFESSIONAL ENGINEER
59,604
OREGON
JAN 12, 1999
KENNETH JAY VOGENEY

Kenneth J. Vogeney 7/11/13

EXPIRES 6/30/14

Scale

SHEET
18

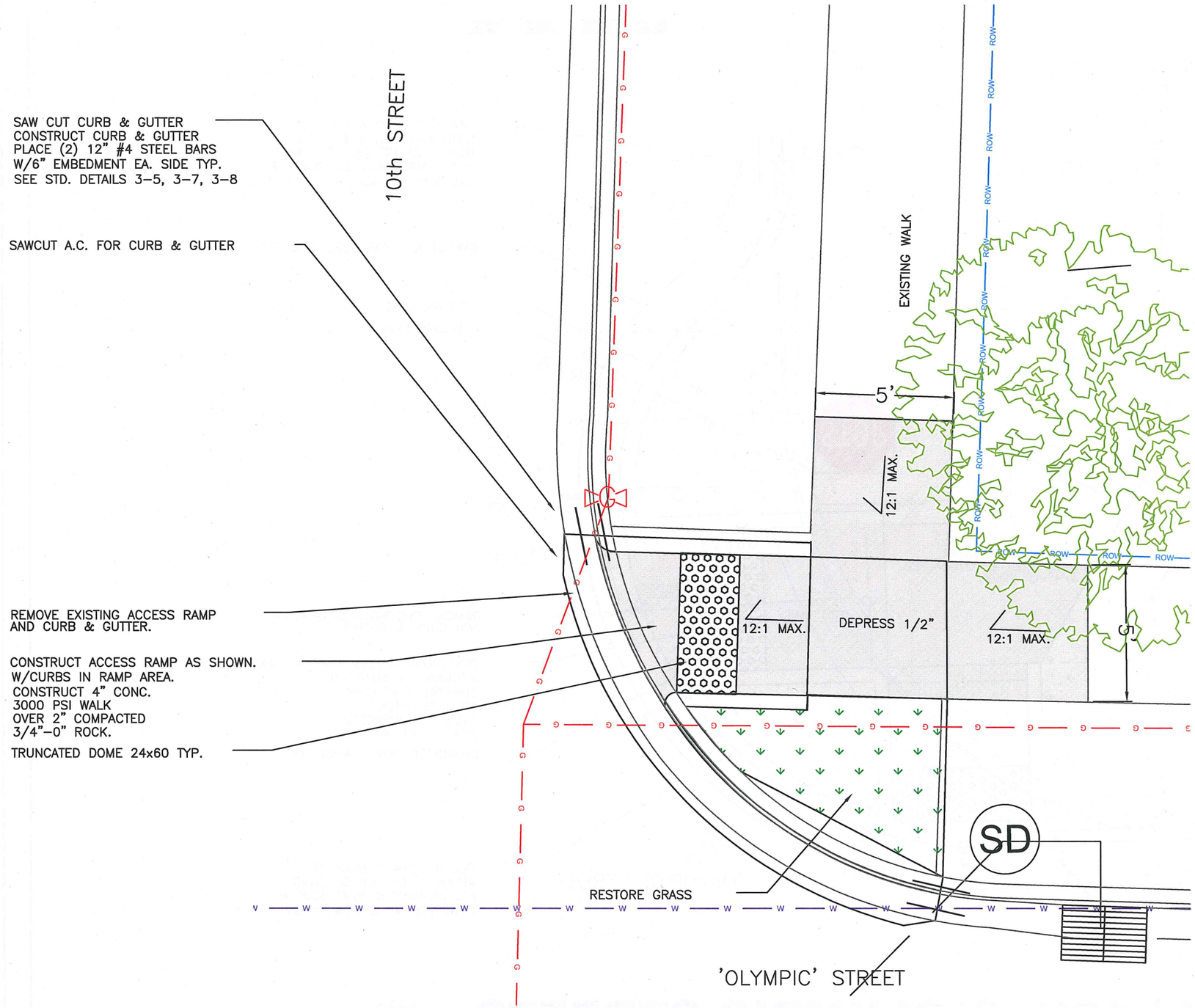

(N.E.) 10th & OLYMPIC STREETS

SCALE: 1"=4'-0"

0 4' 8'

No.	Revision/Issue	Date
DRAWN: RBK		

NOTE:

UTILITY LOCATIONS ARE APPROXIMATE
DO NOT
SCALE OR LOCATE UTILITY LINES OR MAINS
FROM THESE DRAWINGS
CALL FOR UTILITY LOCATES
811 or (1-800-332-2344)

THE CONTRACTOR SHALL BE RESPONSIBLE
FOR DETERMINING UTILITY LOCATIONS PRIOR TO
BEGINNING OF CONSTRUCTION.
THESE PLANS MAY NOT SHOW ALL UTILITIES OR
THE CORRECT LOCATIONS.

10TH AND N SEWER UPGRADE - PHASE 2
PROJECT P21067

City of Springfield

PUBLIC WORKS / ENGINEERING
225 FIFTH STREET, SPRINGFIELD, OR 97477
PHONE: (541) 726-3753 FAX: (541) 726-3221
INTERNET www.ci.springfield.or.us

REGISTERED PROFESSIONAL ENGINEER
59,604
Kenneth J. Vogeney 7/9/13
OREGON
JAN 12, 1999
KENNETH JAY VOGENEY

EXPIRES 6/30/14

Scale

SHEET
19

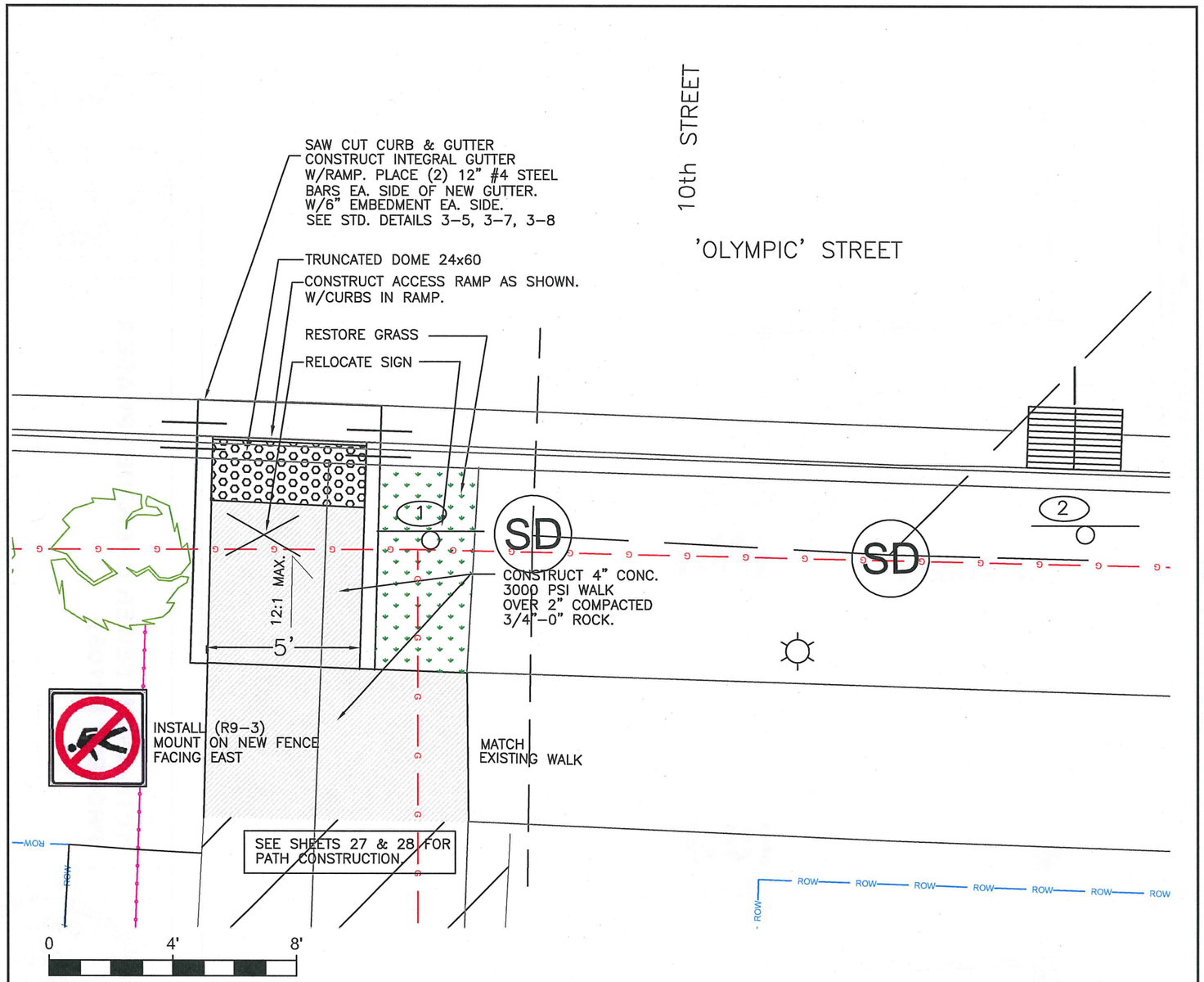

(S.W.) 10th & OLYMPIC STREET

SCALE: 1"=4'-0"

1 RELOCATE EXISTING SIGN & POST TO NEW LOCATION MOUNT (2) OM3-C TWO SIDES BELOW REGULATORY SIGN. (FLUORESCENT YELLOW)

2 INSTALL SIGN & POST (W1-7) FACING NORTH (FLUORESCENT YELLOW)

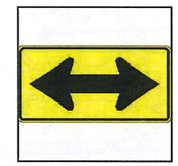

No.	Revision/Issue	Date
DRAWN: RBK		

NOTE:

UTILITY LOCATIONS ARE APPROXIMATE
DO NOT
SCALE OR LOCATE UTILITY LINES OR MAINS
FROM THESE DRAWINGS
CALL FOR UTILITY LOCATES
811 or (1-800-332-2344)

THE CONTRACTOR SHALL BE RESPONSIBLE FOR DETERMINING UTILITY LOCATIONS PRIOR TO BEGINNING OF CONSTRUCTION.
THESE PLANS MAY NOT SHOW ALL UTILITIES OR THE CORRECT LOCATIONS.

10TH AND N SEWER UPGRADE - PHASE 2
PROJECT P21067

City of Springfield

PUBLIC WORKS / ENGINEERING
225 FIFTH STREET, SPRINGFIELD, OR 97477
PHONE (541) 726-3753 FAX (541) 736-1021
INTERNET www.ci.springfield.or.us

REGISTERED PROFESSIONAL ENGINEER
59,604
OREGON
JAN 12, 1999
KENNETH JAY VOGENEY

Kenneth J Vogeney 7/31/13

EXPIRES 6/30/14

Scale

SHEET

20

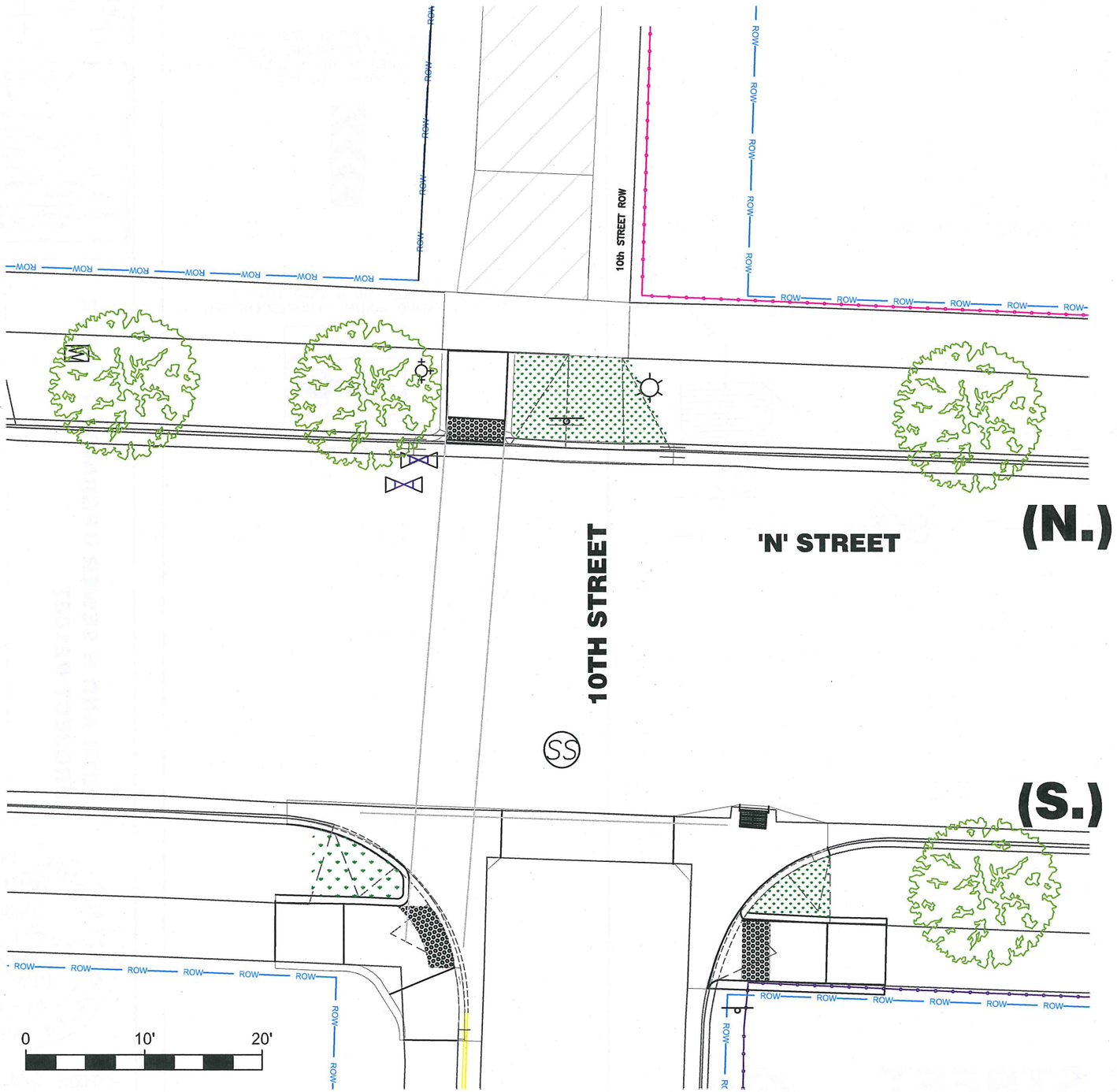

10th & N STREETS VCTY

SCALE: 1"=10'

No.	Revision/Issue	Date
DRAWN: RBK		

NOTE:

UTILITY LOCATIONS ARE APPROXIMATE
DO NOT
SCALE OR LOCATE UTILITY LINES OR MAINS
FROM THESE DRAWINGS
CALL FOR UTILITY LOCATES
811 or (1-800-332-2344)

THE CONTRACTOR SHALL BE RESPONSIBLE FOR DETERMINING UTILITY LOCATIONS PRIOR TO BEGINNING OF CONSTRUCTION.
THESE PLANS MAY NOT SHOW ALL UTILITIES OR THE CORRECT LOCATIONS.

10TH AND N SEWER UPGRADE - PHASE 2
PROJECT P21067

City of Springfield
PUBLIC WORKS / ENGINEERING
225 FIFTH STREET, SPRINGFIELD, OR 97477
PHONE (541) 726-3753 FAX (541) 726-1021
INTERNET www.ci.springfield.or.us

REGISTERED PROFESSIONAL ENGINEER
59,604
Kenneth J Vogeney 7/12/13
OREGON
JAN 12, 1999
KENNETH JAY VOGENEY

EXPIRES 6/30/14

Scale

SHEET
21

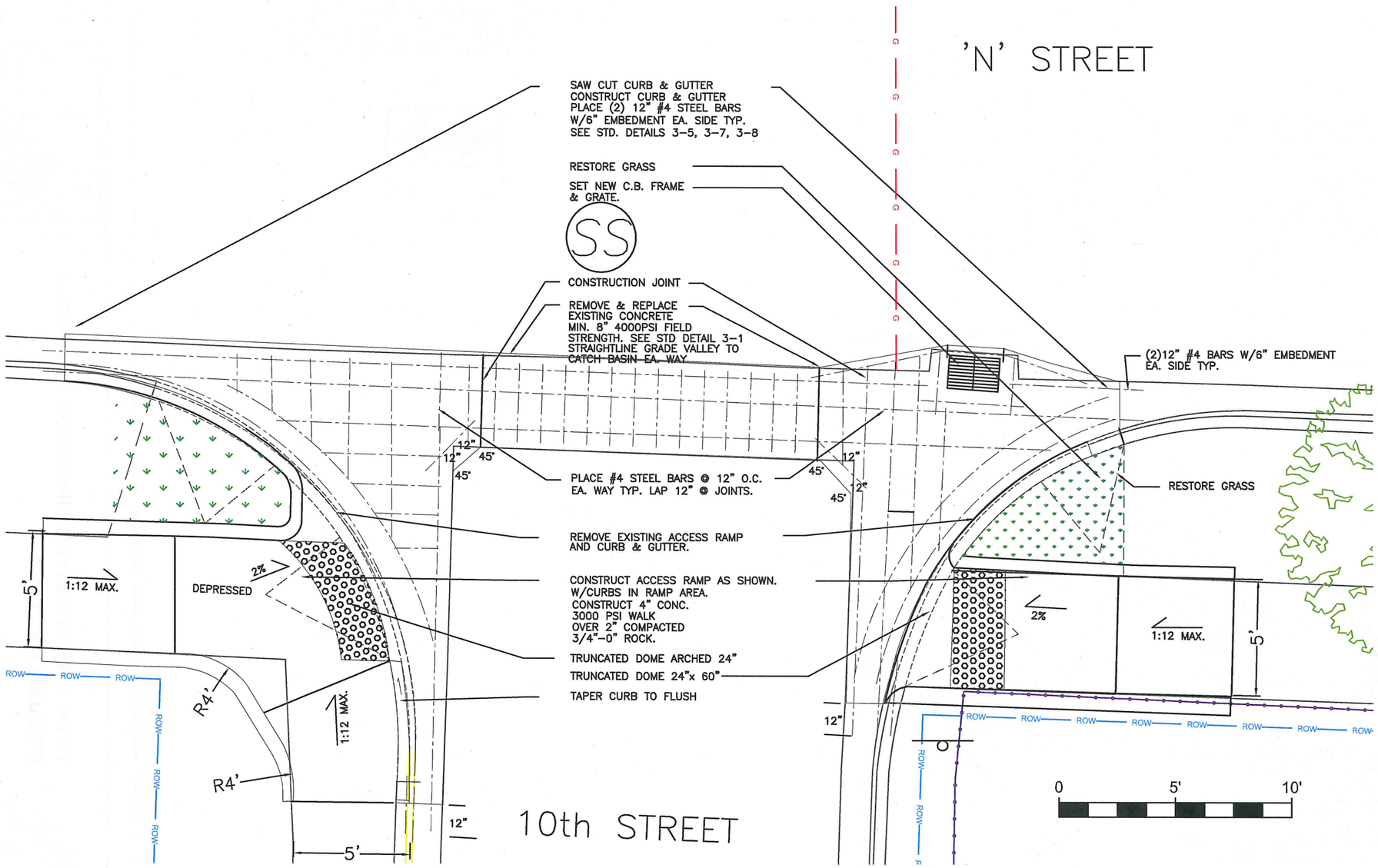

(S.) 10th & N STREETS

SCALE: 1"=5'-0"

No.	Revision/Issue	Date
DRAWN: RBK		

NOTE:

UTILITY LOCATIONS ARE APPROXIMATE
DO NOT
SCALE OR LOCATE UTILITY LINES OR MAINS
FROM THESE DRAWINGS
CALL FOR UTILITY LOCATES
811 or (1-800-332-2344)

THE CONTRACTOR SHALL BE RESPONSIBLE FOR DETERMINING UTILITY LOCATIONS PRIOR TO BEGINNING OF CONSTRUCTION.
THESE PLANS MAY NOT SHOW ALL UTILITIES OR THE CORRECT LOCATIONS.

10TH AND N SEWER UPGRADE - PHASE 2
PROJECT P21067

City of Springfield
PUBLIC WORKS / ENGINEERING
225 FIFTH STREET, SPRINGFIELD, OR 97477
PHONE (541) 726-3753 FAX (541) 736-1021
INTERNET www.ci.springfield.or.us

REGISTERED PROFESSIONAL ENGINEER
59,604
Kenneth J Vogeney 7/1/13
OREGON
JAN 12, 1999
KENNETH JAY VOGENEY

EXPIRES 6/30/14

Scale

SHEET
21A

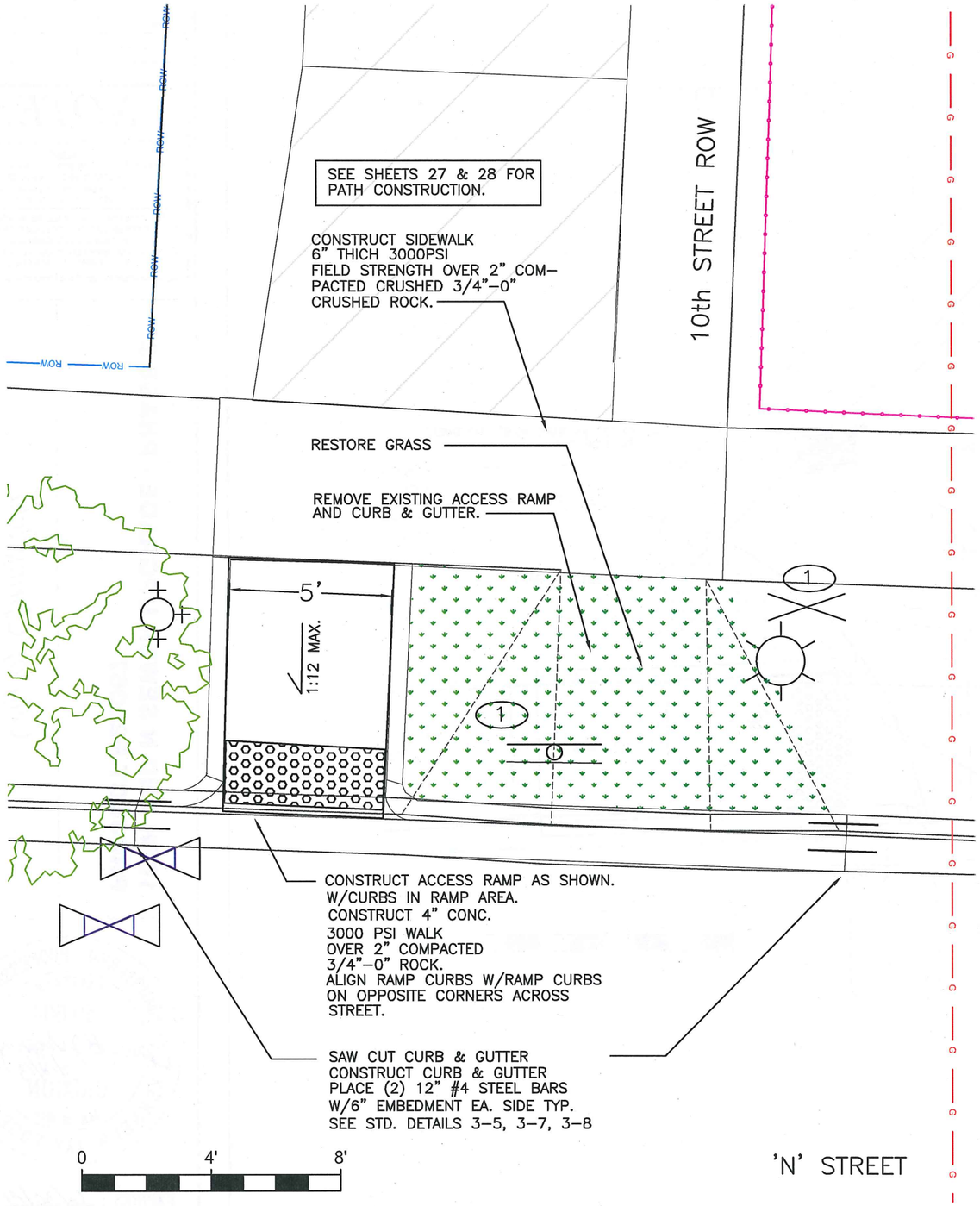

(N.) 10th & N STREETS

SCALE: 1"=4'-0"

1 RELOCATE EXISTING SIGN & POST TO NEW LOCATION MOUNT (2) (W1-7) N-S TWO SIDES BELOW REGULATORY SIGN. ORIENT SOUTH (FLUORESCENT YELLOW)

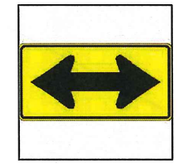

No.	Revision/Issue	Date
DRAWN: RBK		

NOTE:

UTILITY LOCATIONS ARE APPROXIMATE
DO NOT
SCALE OR LOCATE UTILITY LINES OR MAINS FROM THESE DRAWINGS
CALL FOR UTILITY LOCATES 811 or (1-800-332-2344)

THE CONTRACTOR SHALL BE RESPONSIBLE FOR DETERMINING UTILITY LOCATIONS PRIOR TO BEGINNING OF CONSTRUCTION.
THESE PLANS MAY NOT SHOW ALL UTILITIES OR THE CORRECT LOCATIONS.

10TH AND N SEWER UPGRADE - PHASE 2
PROJECT P21067

City of Springfield
PUBLIC WORKS / ENGINEERING
225 FIFTH STREET, SPRINGFIELD, OR 97477
PHONE (541) 726-3753 FAX (541) 726-1021
INTERNET www.ci.springfield.or.us

REGISTERED PROFESSIONAL ENGINEER 59,604 OREGON JAN 12, 1999 KENNETH JAY VOGENEY
Kenneth J. Vogeney 7/10/13

EXPIRES 6/30/14

Scale

SHEET 22

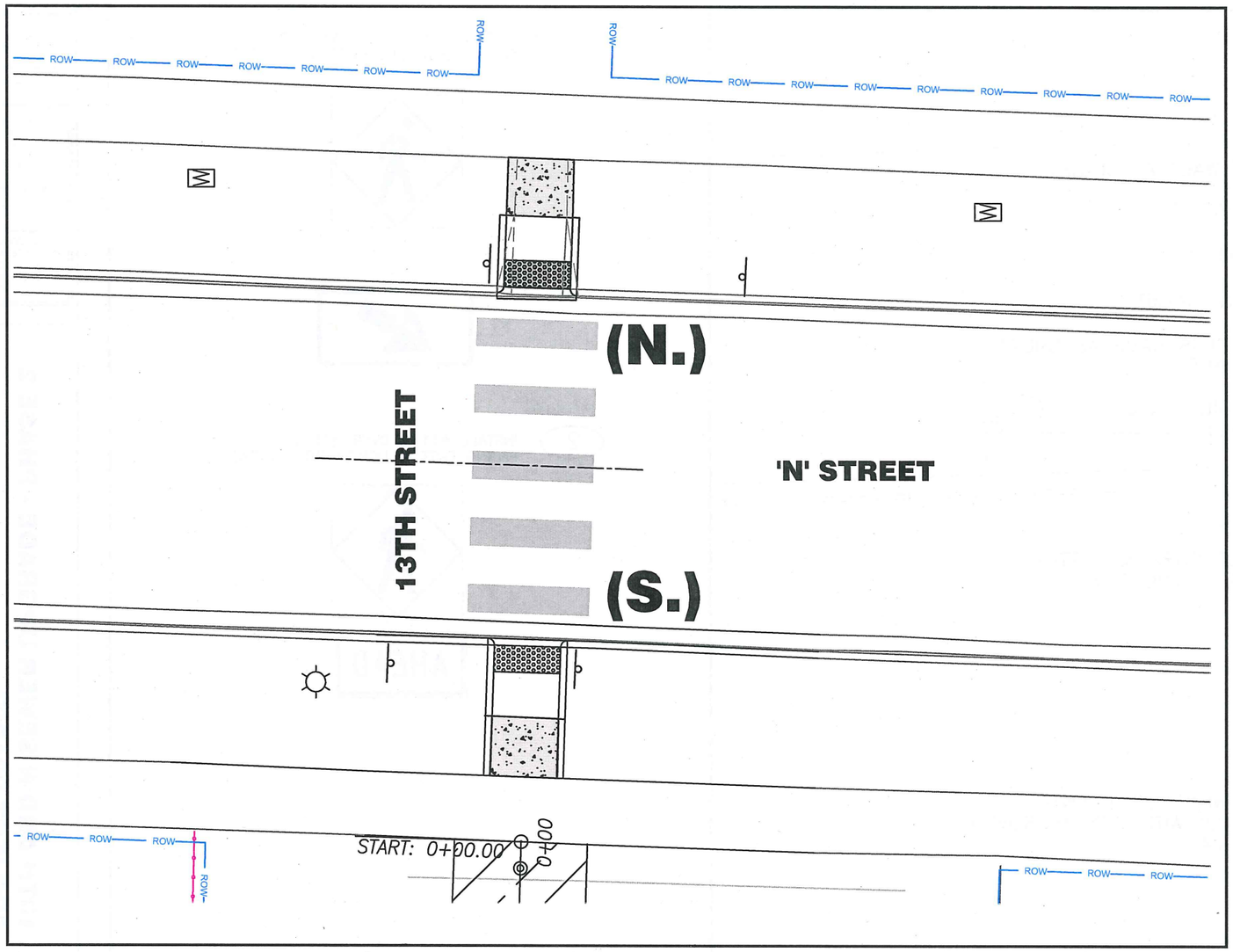

13th & 'N' STREETS VCTY

SCALE: 1"=10'

0 10' 20'

No.	Revision/Issue	Date
DRAWN: RBK		

NOTE:

UTILITY LOCATIONS ARE APPROXIMATE
DO NOT
SCALE OR LOCATE UTILITY LINES OR MAINS
FROM THESE DRAWINGS
CALL FOR UTILITY LOCATES
811 or (1-800-332-2344)

THE CONTRACTOR SHALL BE RESPONSIBLE FOR DETERMINING UTILITY LOCATIONS PRIOR TO BEGINNING OF CONSTRUCTION.
THESE PLANS MAY NOT SHOW ALL UTILITIES OR THE CORRECT LOCATIONS.

10TH AND N SEWER UPGRADE - PHASE 2
PROJECT P21067

City of Springfield
PUBLIC WORKS / ENGINEERING
225 FIFTH STREET, SPRINGFIELD, OR 97477
PHONE (541) 726-3753 FAX (541) 726-3921
INTERNET www.ci.springfield.or.us

REGISTERED PROFESSIONAL ENGINEER
59,604
OREGON
JAN 12, 1999
KENNETH JAY VOGENEY

Kenneth J. Vogeney 9/10/13

EXPIRES 6/30/14

Scale

SHEET
23

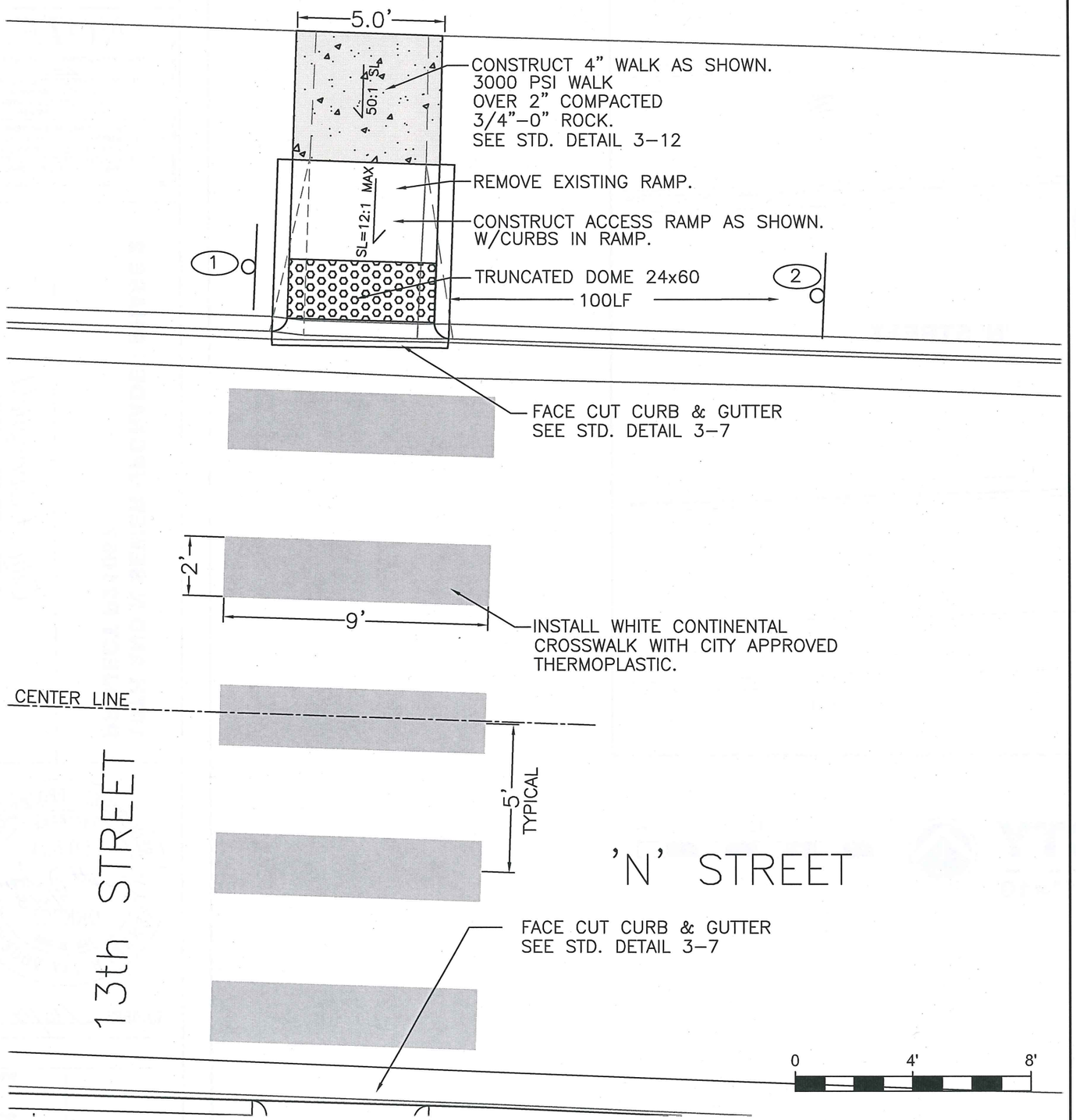

1 INSTALL W11-2 OVER W16-7P
FACING EAST (FLUORESCENT YELLOW)

2 INSTALL W11-2 OVER W16-9P
FACING EAST (FLUORESCENT YELLOW)

NORTH
13th & 'N' STREETS

SCALE: 1"=4'-0"

No.	Revision/Issue	Date
DRAWN: RBK		

NOTE:

UTILITY LOCATIONS ARE APPROXIMATE
DO NOT
SCALE OR LOCATE UTILITY LINES OR MAINS
FROM THESE DRAWINGS
CALL FOR UTILITY LOCATES
811 or (1-800-332-2344)

THE CONTRACTOR SHALL BE RESPONSIBLE
FOR DETERMINING UTILITY LOCATIONS PRIOR TO
BEGINNING OF CONSTRUCTION.
THESE PLANS MAY NOT SHOW ALL UTILITIES OR
THE CORRECT LOCATIONS.

10TH AND N SEWER UPGRADE - PHASE 2
PROJECT P21067

City of Springfield
PUBLIC WORKS / ENGINEERING
225 FIFTH STREET, SPRINGFIELD, OR 97477
PHONE (541) 726-3753, FAX (541) 726-3921
INTERNET www.ci.springfield.or.us

REGISTERED PROFESSIONAL ENGINEER
59,604
OREGON
JAN 12, 1999
KENNETH JAY VOGENEY

EXPIRES 6/30/14

Scale

SHEET
23A

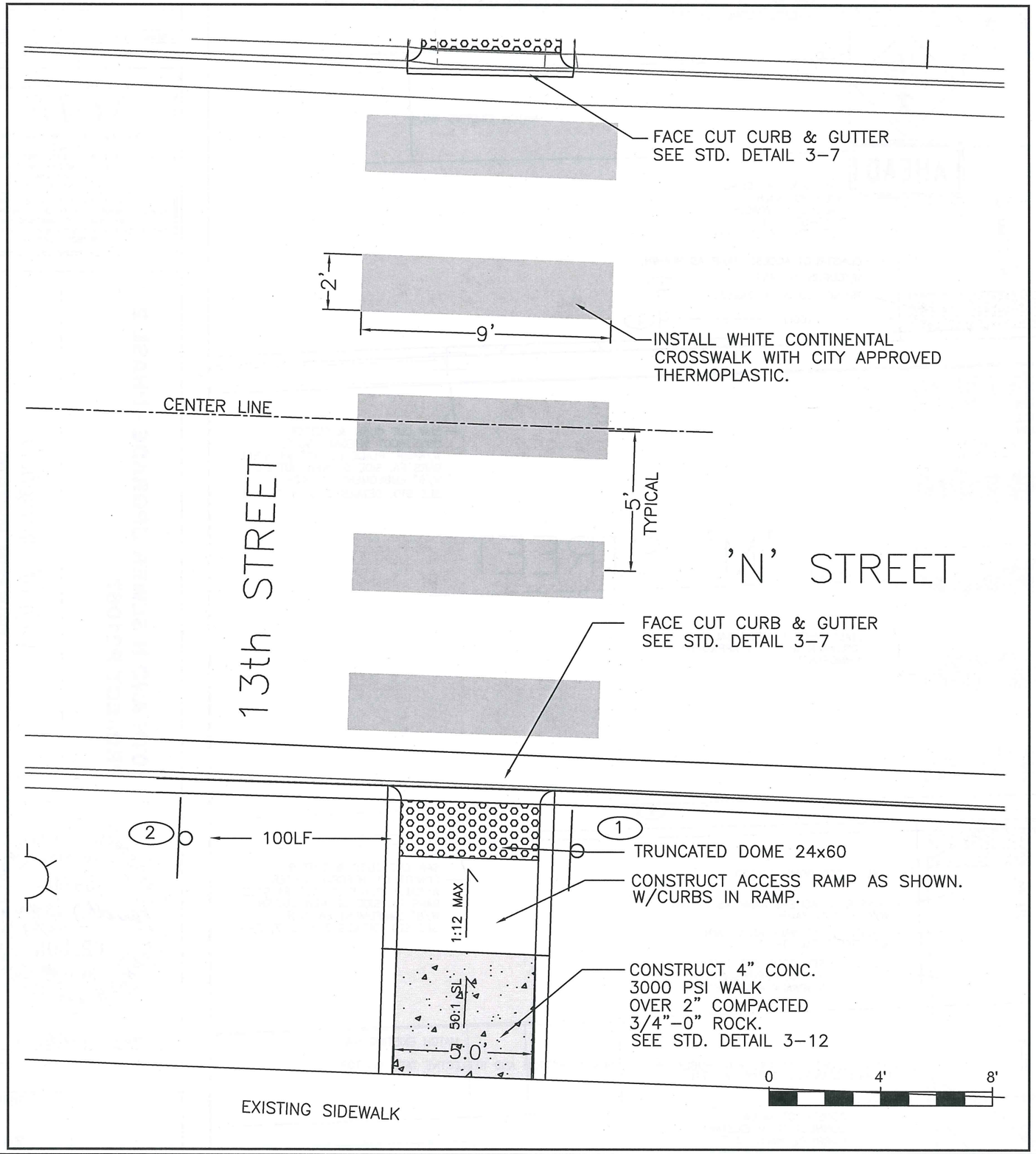

1 INSTALL W11-2 OVER W16-7P
FACING WEST (FLUORESCENT YELLOW)

2 INSTALL W11-2 OVER W16-9P
FACING WEST (FLUORESCENT YELLOW)

SOUTH 13th & 'N' STREETS

SCALE: 1"=4'-0"

No.	Revision/Issue	Date
DRAWN: RBK		

NOTE:

UTILITY LOCATIONS ARE APPROXIMATE
DO NOT
SCALE OR LOCATE UTILITY LINES OR MAINS
FROM THESE DRAWINGS
CALL FOR UTILITY LOCATES
811 or (1-800-332-2344)

THE CONTRACTOR SHALL BE RESPONSIBLE
FOR DETERMINING UTILITY LOCATIONS PRIOR TO
BEGINNING OF CONSTRUCTION.
THESE PLANS MAY NOT SHOW ALL UTILITIES OR
THE CORRECT LOCATIONS.

10TH AND N SEWER UPGRADE - PHASE 2
PROJECT P21067

City of Springfield
PUBLIC WORKS / ENGINEERING
225 FIFTH STREET, SPRINGFIELD, OR 97477
PHONE (541) 726-3753 FAX (541) 726-3921
INTERNET www.ci.springfield.or.us

REGISTERED PROFESSIONAL ENGINEER
59,604
OREGON
JAN 12, 1999
KENNETH JAY VOGENEY

Kenneth J. Vogeney
7/10/13

EXPIRES 6/30/14

Scale

SHEET
23B

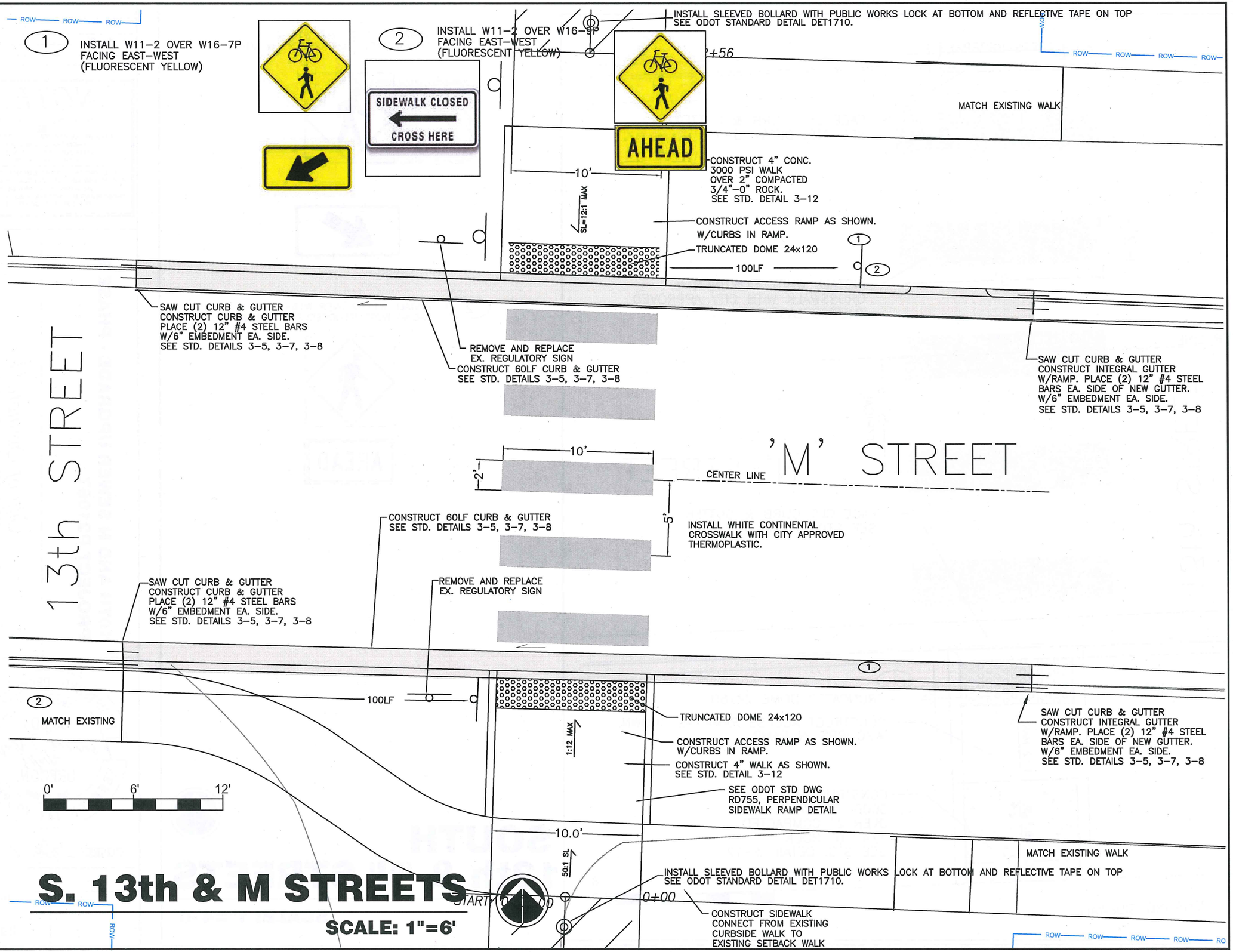

S. 13th & M STREETS

SCALE: 1"=6'

No.	Revision/Issue	Date
DRAWN: RBK		

NOTE:

UTILITY LOCATIONS ARE APPROXIMATE
DO NOT
SCALE OR LOCATE UTILITY LINES OR MAINS
FROM THESE DRAWINGS
CALL FOR UTILITY LOCATES
811 or (1-800-332-2344)

THE CONTRACTOR SHALL BE RESPONSIBLE
FOR DETERMINING UTILITY LOCATIONS PRIOR TO
BEGINNING OF CONSTRUCTION.
THESE PLANS MAY NOT SHOW ALL UTILITIES OR
THE CORRECT LOCATIONS.

10TH AND N SEWER UPGRADE - PHASE 2
PROJECT P21067

City of Springfield
PUBLIC WORKS / ENGINEERING
225 FIFTH STREET, SPRINGFIELD, OR 97477
PHONE (541) 726-3753 FAX (541) 726-1021
INTERNET www.ci.springfield.or.us

REGISTERED PROFESSIONAL ENGINEER
59,604
Kenneth J. Vogeney 7/10/13
OREGON
JAN 12, 1999
KENNETH JAY VOGENEY

EXPIRES 6/30/14

Scale

SHEET
24

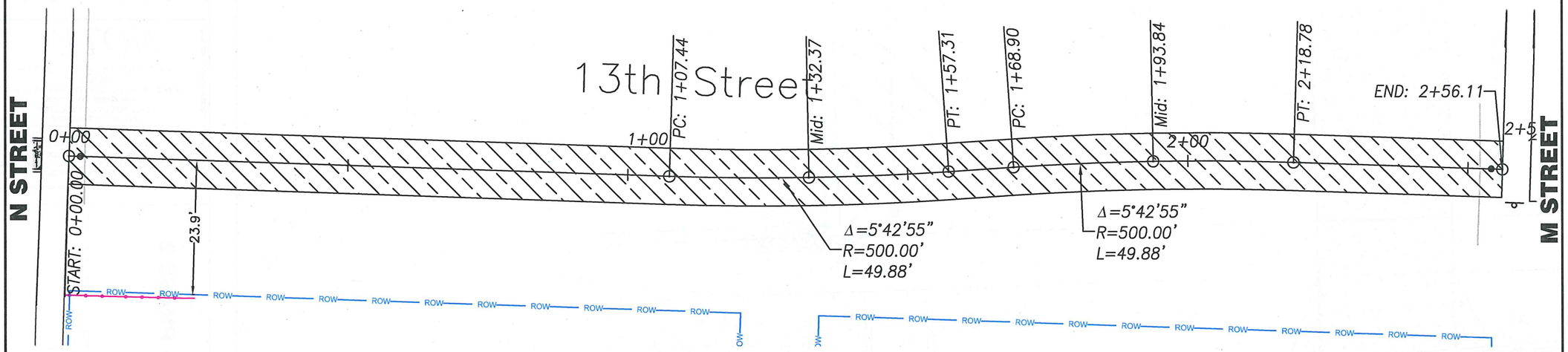

N TO M PATH - N to M Alignment Center

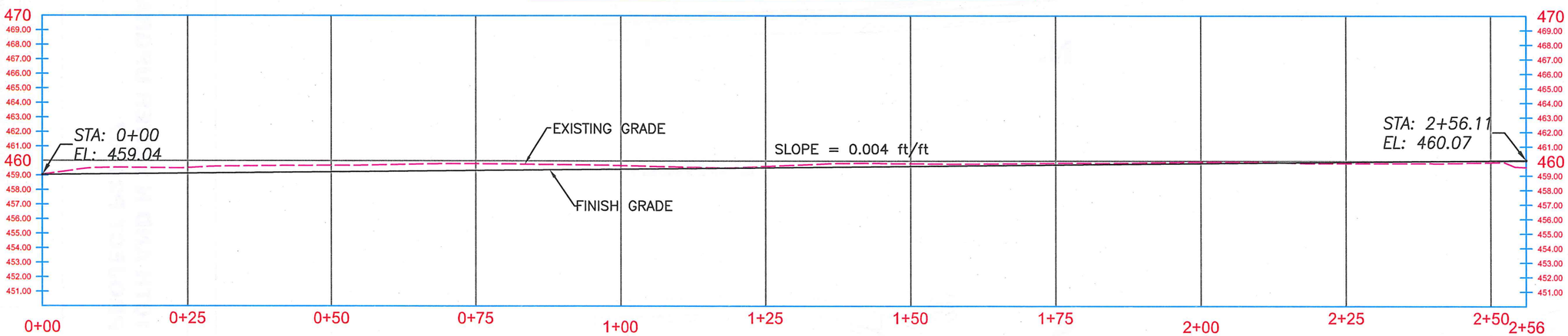

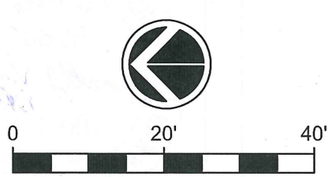

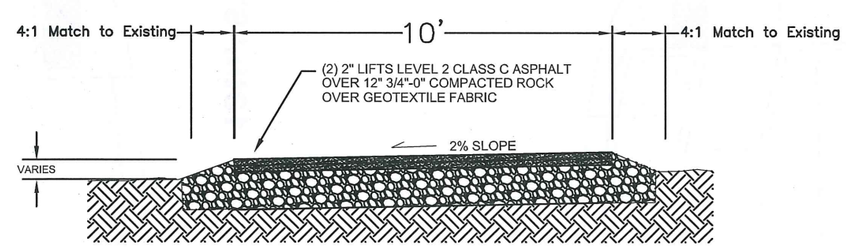

SECTION PATH LOOKING NORTH

SCALE: 1" = 4' - 0"

13th - N to M PATH

SCALE: 1"=20'

No.	Revision/Issue	Date
DRAWN: RBK		

NOTE:

UTILITY LOCATIONS ARE APPROXIMATE
DO NOT
SCALE OR LOCATE UTILITY LINES OR MAINS
FROM THESE DRAWINGS
CALL FOR UTILITY LOCATES
811 or (1-800-332-2344)

THE CONTRACTOR SHALL BE RESPONSIBLE FOR DETERMINING UTILITY LOCATIONS PRIOR TO BEGINNING OF CONSTRUCTION.
THESE PLANS MAY NOT SHOW ALL UTILITIES OR THE CORRECT LOCATIONS.

10TH AND N SEWER UPGRADE - PHASE 2
PROJECT P21067

City of Springfield

PUBLIC WORKS / ENGINEERING
225 FIFTH STREET, SPRINGFIELD, OR 97477
PHONE (541) 726-3753 FAX (541) 736-1021
INTERNET www.ci.springfield.or.us

REGISTERED PROFESSIONAL ENGINEER
59,604
OREGON
JAN 12, 1999
KENNETH JAY VOGENEY

Kenneth J. Vogeney 7/29/13

EXPIRES 6/30/14

Scale

SHEET

24A

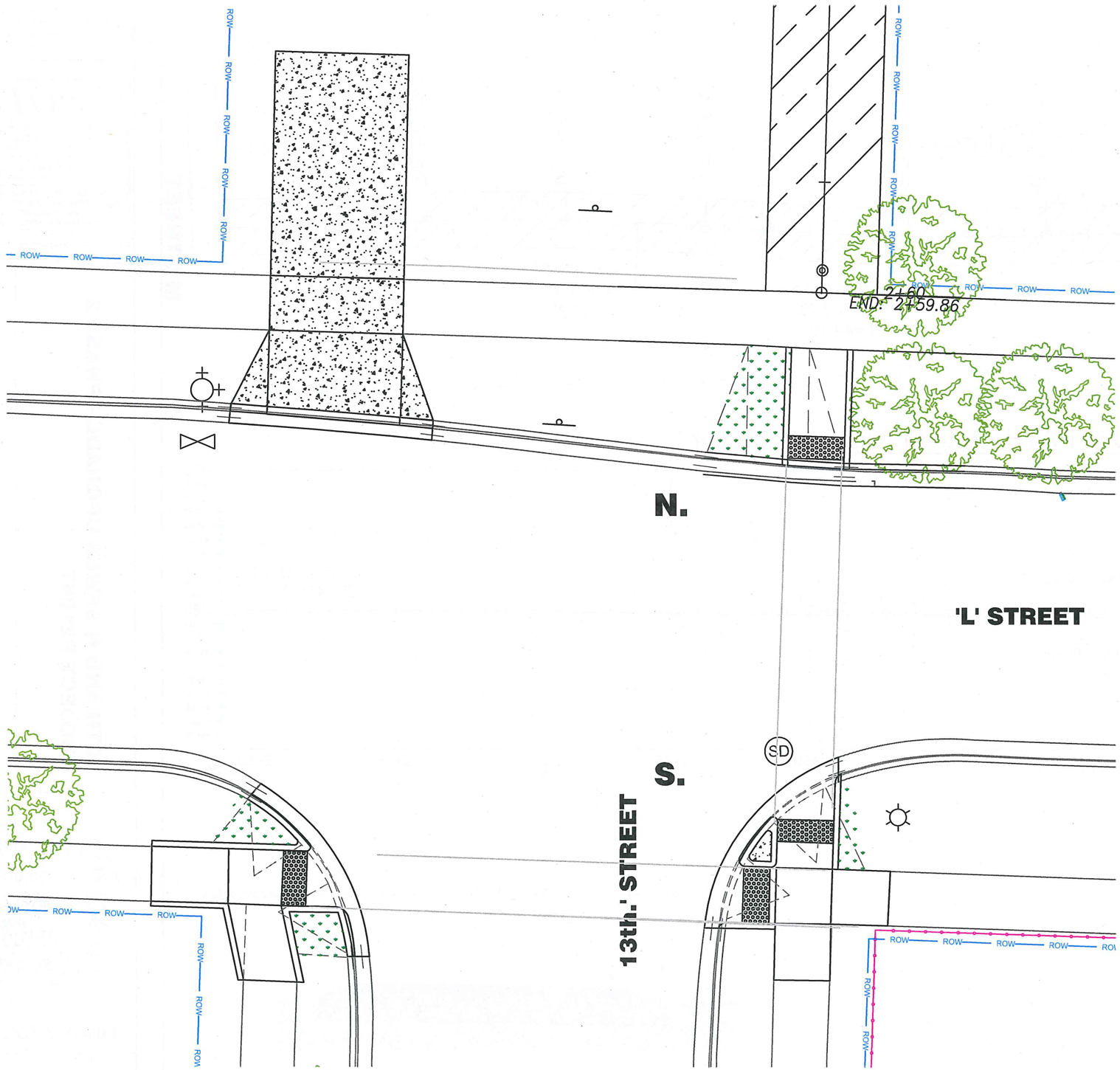

S. 13th & L STREETS VCTY

SCALE: 1"=10'

0 10' 20'

No.	Revision/Issue	Date
DRAWN: RBK		

NOTE:

UTILITY LOCATIONS ARE APPROXIMATE
DO NOT
SCALE OR LOCATE UTILITY LINES OR MAINS
FROM THESE DRAWINGS
CALL FOR UTILITY LOCATES
811 or (1-800-332-2344)

THE CONTRACTOR SHALL BE RESPONSIBLE FOR DETERMINING UTILITY LOCATIONS PRIOR TO BEGINNING OF CONSTRUCTION.
THESE PLANS MAY NOT SHOW ALL UTILITIES OR THE CORRECT LOCATIONS.

10TH AND N SEWER UPGRADE - PHASE 2
PROJECT P21067

City of Springfield
PUBLIC WORKS / ENGINEERING
225 FIFTH STREET, SPRINGFIELD, OR 97477
PHONE (541) 726-3753, FAX (541) 726-3921
INTERNET www.ci.springfield.or.us

REGISTERED PROFESSIONAL ENGINEER
59,604
Kenneth J. Vogeney 7/24/13
OREGON
JAN 12, 1999
KENNETH JAY VOGENEY

EXPIRES 6/30/14

Scale

SHEET 25

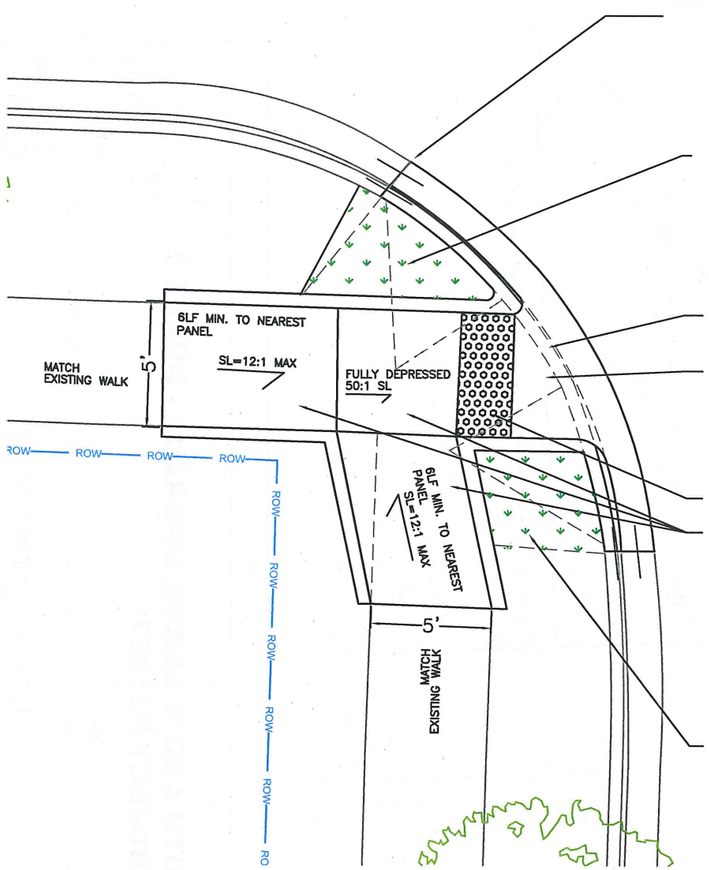

SAW CUT CURB & GUTTER
CONSTRUCT INTEGRAL GUTTER
W/RAMP. PLACE (2) 12" #4 STEEL
BARS EA. SIDE OF NEW GUTTER.
W/6" EMBEDMENT EA. SIDE.
SEE STD. DETAILS 3–5, 3–7, 3–8

RESTORE GRASS

REMOVE EXISTING ACCESS RAMP
AND CURB & GUTTER.

CONSTRUCT ACCESS RAMP
AS SHOWN.
W/CURBS IN RAMP AREA.
CONSTRUCT 4" CONC.
3000 PSI WALK
OVER 2" COMPACTED
3/4"–0" ROCK.

TRUNCATED DOME 24x60 TYP.

CONSTRUCT 4" CONC.
3000 PSI WALK
OVER 2" COMPACTED
3/4"–0" ROCK.
SEE STD. DETAIL 3–12

SAW CUT CURB & GUTTER
CONSTRUCT INTEGRAL GUTTER
W/RAMP. PLACE (2) 12" #4 STEEL
BARS EA. SIDE OF NEW GUTTER.
W/6" EMBEDMENT EA. SIDE.
SEE STD. DETAILS 3–5, 3–7, 3–8

RESTORE GRASS

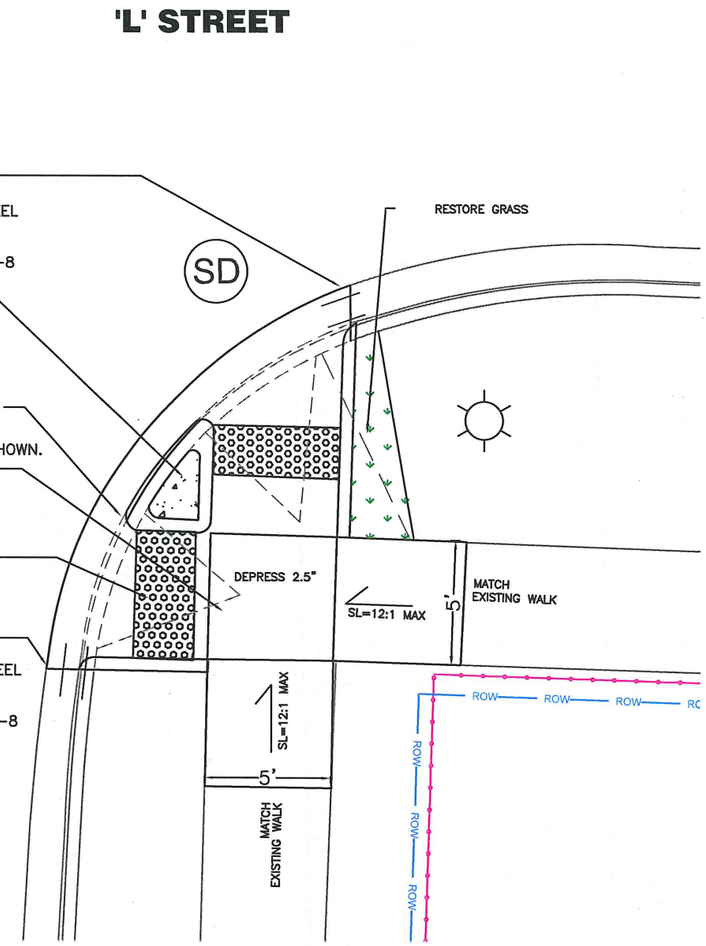

SAW CUT CURB & GUTTER
CONSTRUCT INTEGRAL GUTTER
W/RAMP. PLACE (2) 12" #4 STEEL
BARS EA. SIDE OF NEW GUTTER.
W/6" EMBEDMENT EA. SIDE.
SEE STD. DETAILS 3–5, 3–7, 3–8

FILL W/ 3/4–0 ROCK TO
WITHIN 4" OF TOP OF CURB
FILL REMAINDER W/4" 3000 PSI
CONCRETE W/ BROOM FINISH.

REMOVE EXISTING ACCESS RAMP
AND CURB & GUTTER.

CONSTRUCT ACCESS RAMP AS SHOWN.
W/CURBS IN RAMP AREA.
CONSTRUCT 4" CONC.
3000 PSI WALK
OVER 2" COMPACTED
3/4"–0" ROCK.

TRUNCATED DOME 24x60 TYP.

SAW CUT CURB & GUTTER
CONSTRUCT INTEGRAL GUTTER
W/RAMP. PLACE (2) 12" #4 STEEL
BARS EA. SIDE OF NEW GUTTER.
W/6" EMBEDMENT EA. SIDE.
SEE STD. DETAILS 3–5, 3–7, 3–8

S. 13th & L STREETS

SCALE: 1"=6'

0' 6' 12'

No.	Revision/Issue	Date
DRAWN: RBK		

NOTE:

UTILITY LOCATIONS ARE APPROXIMATE
DO NOT
SCALE OR LOCATE UTILITY LINES OR MAINS
FROM THESE DRAWINGS
CALL FOR UTILITY LOCATES
811 or (1-800-332-2344)

THE CONTRACTOR SHALL BE RESPONSIBLE
FOR DETERMINING UTILITY LOCATIONS PRIOR TO
BEGINNING OF CONSTRUCTION.
THESE PLANS MAY NOT SHOW ALL UTILITIES OR
THE CORRECT LOCATIONS.

10TH AND N SEWER UPGRADE - PHASE 2
PROJECT P21067

City of Springfield
PUBLIC WORKS / ENGINEERING
225 FIFTH STREET, SPRINGFIELD, OR 97477
PHONE (541) 726-3753 FAX (541) 736-1021
INTERNET www.ci.springfield.or.us

REGISTERED PROFESSIONAL ENGINEER
59,604
Kenneth J. Vogeney 7/10/13
OREGON
JAN 12, 1999
KENNETH JAY VOGENEY

EXPIRES 6/30/14

Scale

SHEET
25A

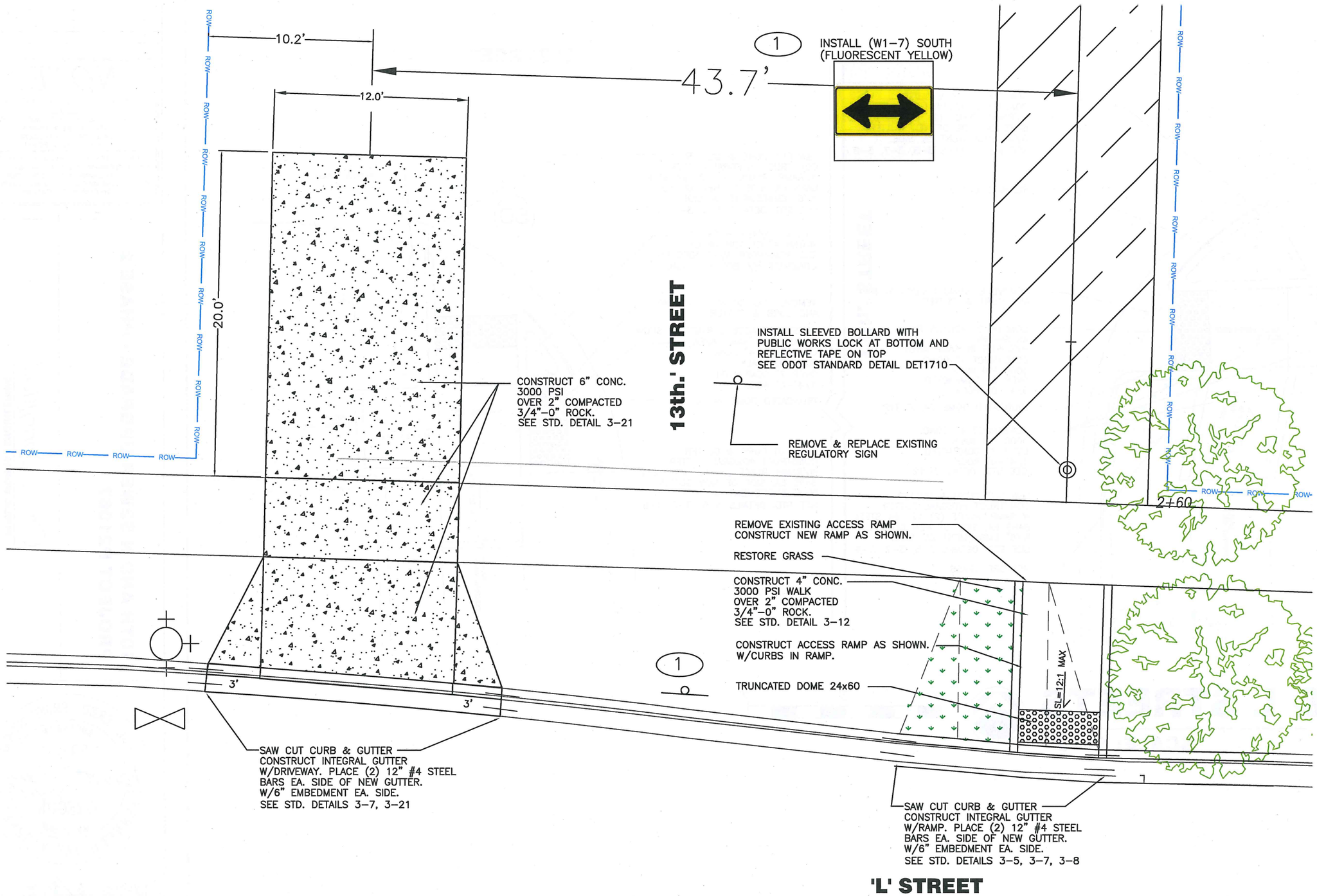

N. 13th & L STREETS

SCALE: 1"=6'

0' 6' 12'

No.	Revision/Issue	Date
DRAWN: RBK		

NOTE:

UTILITY LOCATIONS ARE APPROXIMATE
DO NOT
SCALE OR LOCATE UTILITY LINES OR MAINS
FROM THESE DRAWINGS
CALL FOR UTILITY LOCATES
811 or (1-800-332-2344)

THE CONTRACTOR SHALL BE RESPONSIBLE
FOR DETERMINING UTILITY LOCATIONS PRIOR TO
BEGINNING OF CONSTRUCTION.
THESE PLANS MAY NOT SHOW ALL UTILITIES OR
THE CORRECT LOCATIONS.

10TH AND N SEWER UPGRADE - PHASE 2
PROJECT P21067

City of Springfield
PUBLIC WORKS / ENGINEERING
225 FIFTH STREET, SPRINGFIELD, OR 97477
PHONE (541) 726-3753 FAX (541) 726-1021
INTERNET www.ci.springfield.or.us

REGISTERED PROFESSIONAL ENGINEER
59,604
Kenneth J. Vogeney 2/10/13
OREGON
JAN 12, 1999
KENNETH JAY VOGENEY

EXPIRES 6/30/14

Scale

SHEET
26

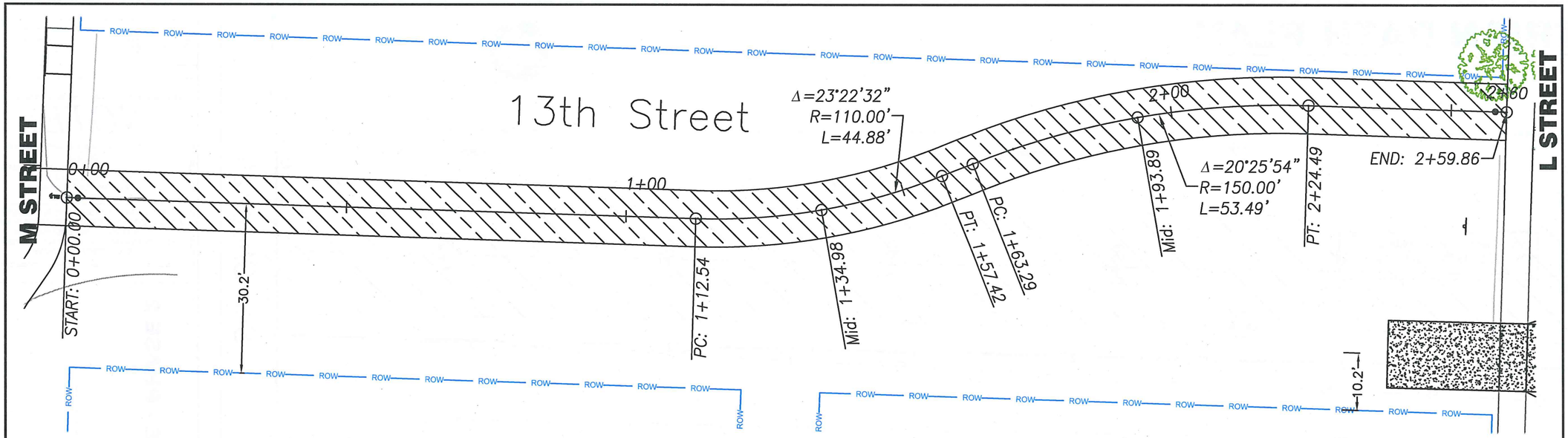

M TO L PATH - M to L Alignment Center

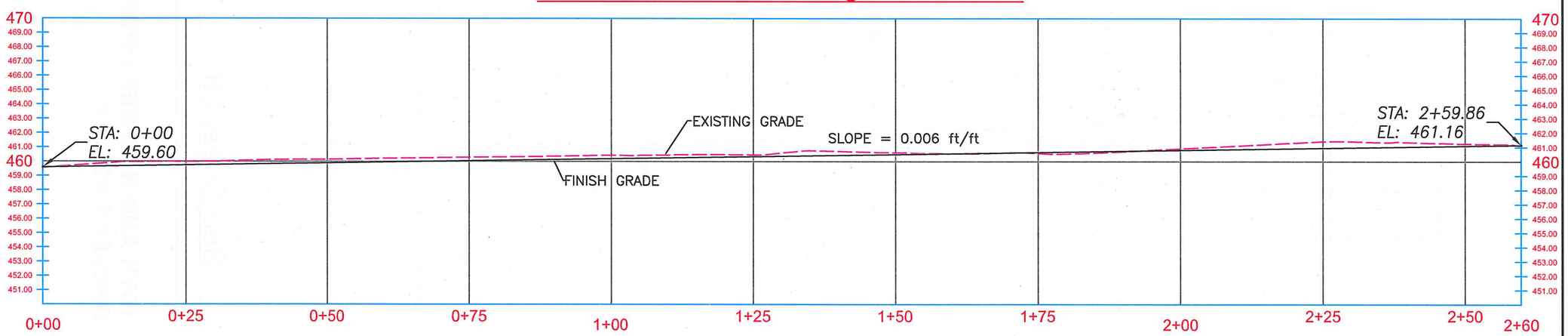

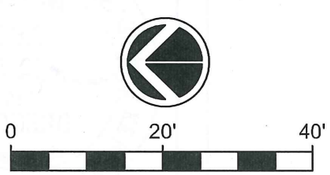

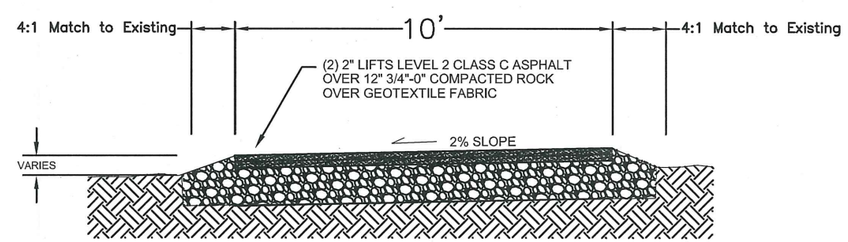

SECTION PATH LOOKING NORTH

SCALE: 1" = 4' - 0"

13th - M to L PATH

SCALE: 1"=20'

No.	Revision/Issue	Date
DRAWN: RBK		

NOTE:

UTILITY LOCATIONS ARE APPROXIMATE
DO NOT
SCALE OR LOCATE UTILITY LINES OR MAINS
FROM THESE DRAWINGS
CALL FOR UTILITY LOCATES
811 or (1-800-332-2344)

THE CONTRACTOR SHALL BE RESPONSIBLE FOR DETERMINING UTILITY LOCATIONS PRIOR TO BEGINNING OF CONSTRUCTION.
THESE PLANS MAY NOT SHOW ALL UTILITIES OR THE CORRECT LOCATIONS.

10TH AND N SEWER UPGRADE - PHASE 2
PROJECT P21067

City of Springfield

PUBLIC WORKS / ENGINEERING
225 FIFTH STREET, SPRINGFIELD, OR 97477
PHONE (541) 726-3753 FAX (541) 736-1021
INTERNET www.ci.springfield.or.us

REGISTERED PROFESSIONAL ENGINEER
59,604
Kenneth J. Vogeney 7/2/13
OREGON
JAN 12, 1999
KENNETH JAY VOGENEY

EXPIRES 6/30/14

Scale

SHEET
26A

PEDESTRIAN PATH PLAN

SCALE: 1" = 10' - 0"

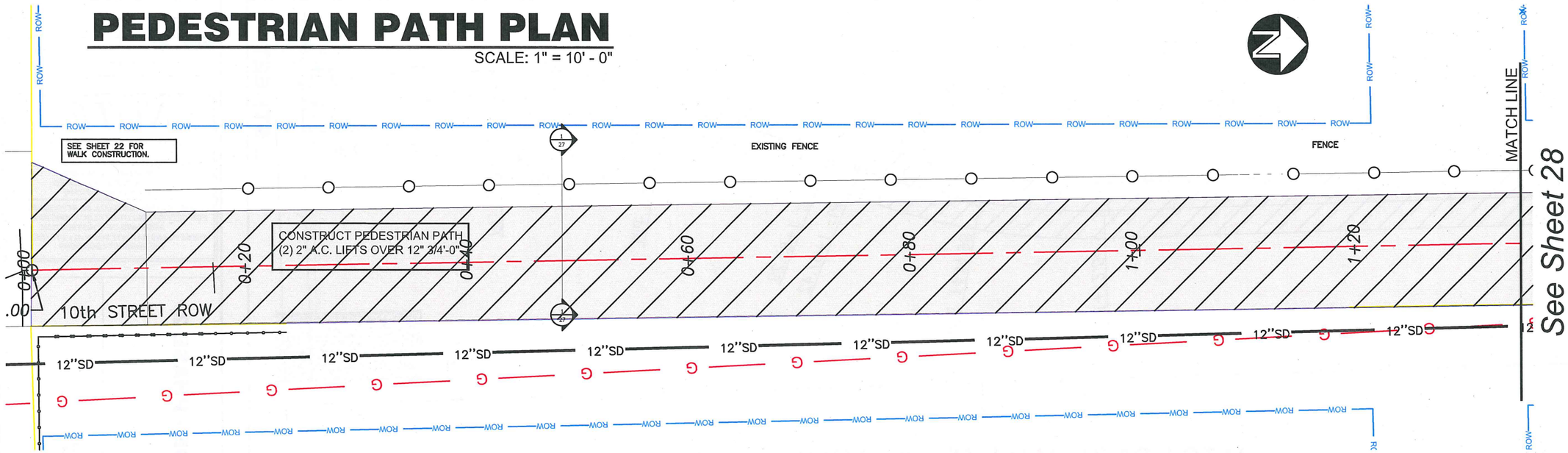

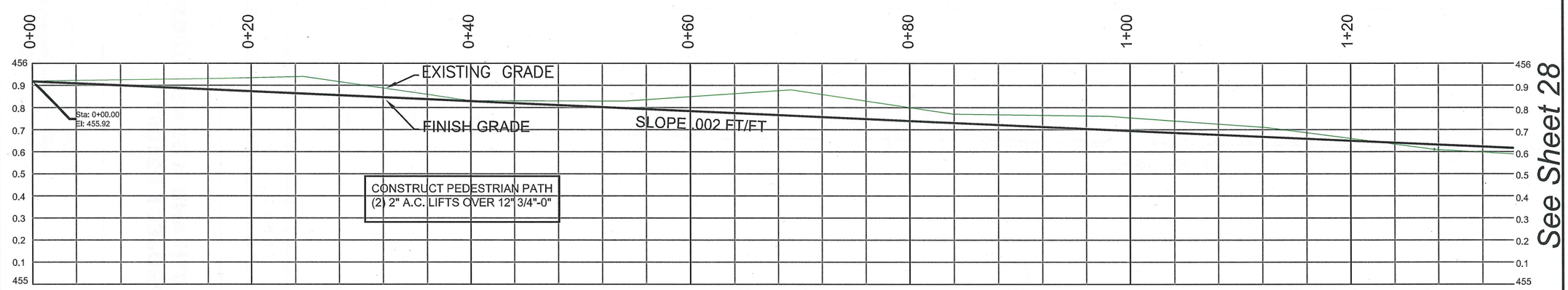

PEDESTRIAN PATH PROFILE CENTER - 10TH ST, OLYMPIC TO N

SCALE: 1" = 10' - 0"

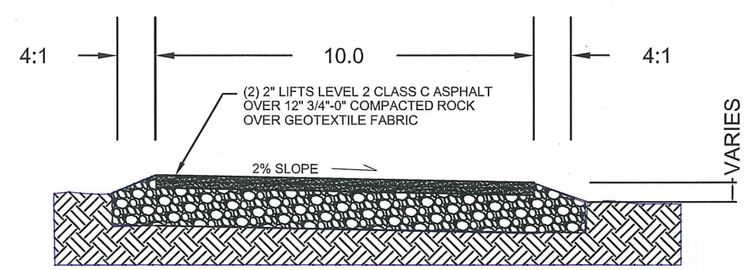

1 SECTION PATH LOOKING NORTH

SCALE: 1" = 4' - 0"

No.	Revision/Issue	Date
DRAWN: RBK		

NOTE:

UTILITY LOCATIONS ARE APPROXIMATE
DO NOT
SCALE OR LOCATE UTILITY LINES OR MAINS
FROM THESE DRAWINGS
CALL FOR UTILITY LOCATES
1-800-332-2344

THE CONTRACTOR SHALL BE RESPONSIBLE FOR DETERMINING UTILITY LOCATIONS PRIOR TO BEGINNING OF CONSTRUCTION.
THESE PLANS MAY NOT SHOW ALL UTILITIES OR THE CORRECT LOCATIONS.

10TH AND N SEWER UPGRADE - PHASE 2
PROJECT P21067

City of Springfield
PUBLIC WORKS / ENGINEERING
225 FIFTH STREET, SPRINGFIELD, OR 97477
PHONE (541) 726-3753 FAX (541) 726-1021
INTERNET www.ci.springfield.or.us

REGISTERED PROFESSIONAL ENGINEER
59,604
Kenneth J. Vogeney 7/29/13
OREGON
JAN 12, 1999
KENNETH JAY VOGENEY

EXPIRES 6/30/14

Scale

SHEET

27

PEDESTRIAN PATH PLAN

SCALE: 1" = 10' - 0"

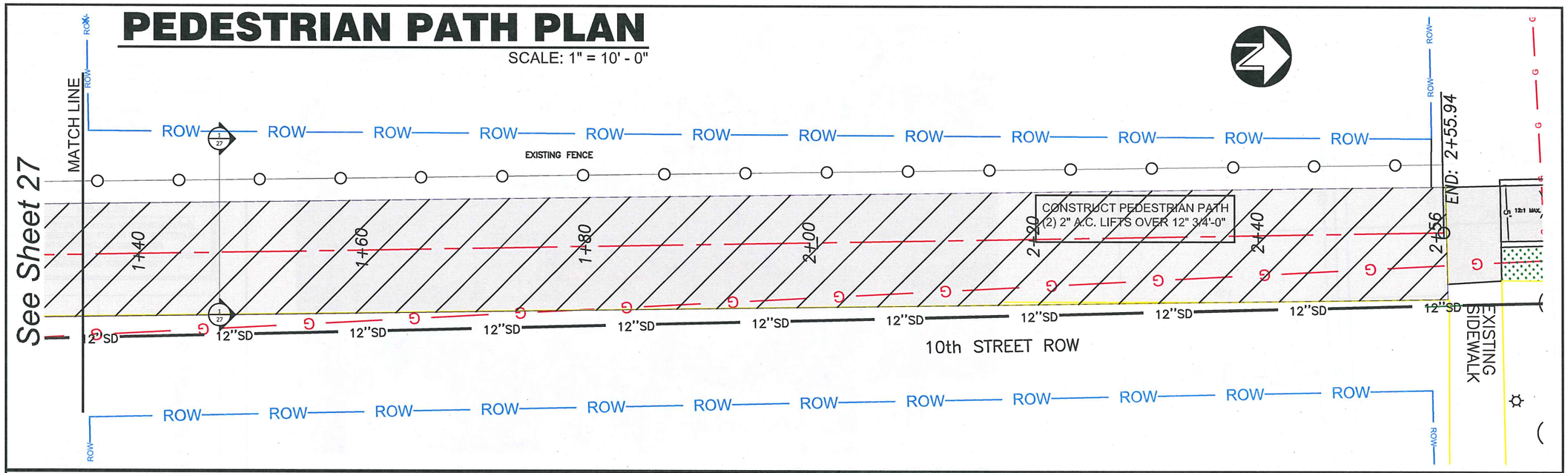

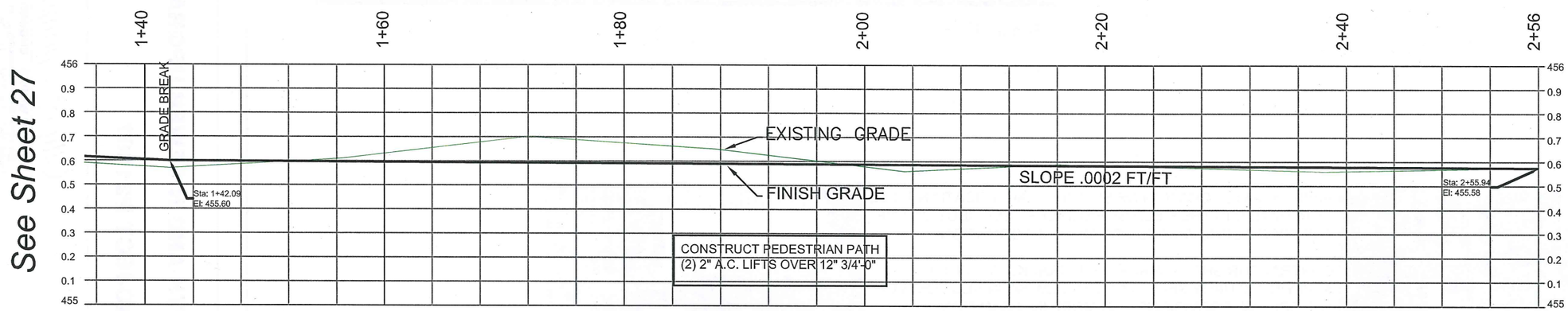

PEDESTRIAN PATH PROFILE - 10TH STREET, OLYMPIC TO N

SCALE: 1" = 10' - 0"

No.	Revision/Issue	Date
DRAWN: RBK		

NOTE:

UTILITY LOCATIONS ARE APPROXIMATE
DO NOT
SCALE OR LOCATE UTILITY LINES OR MAINS
FROM THESE DRAWINGS
CALL FOR UTILITY LOCATES
1-800-332-2344

THE CONTRACTOR SHALL BE RESPONSIBLE FOR DETERMINING UTILITY LOCATIONS PRIOR TO BEGINNING OF CONSTRUCTION. THESE PLANS MAY NOT SHOW ALL UTILITIES OR THE CORRECT LOCATIONS.

10TH AND N SEWER UPGRADE - PHASE 2
PROJECT P21067

City of Springfield
PUBLIC WORKS / ENGINEERING
225 FIFTH STREET, SPRINGFIELD, OR 97477
PHONE (541) 726-3753 FAX (541) 726-1021
INTERNET www.ci.springfield.or.us

REGISTERED PROFESSIONAL ENGINEER
59,604
OREGON
JAN 12, 1999
KENNETH JAY VOGENEY

Kenneth J. Vogeney 7/10/13

EXPIRES 6/30/14

Scale

SHEET

28

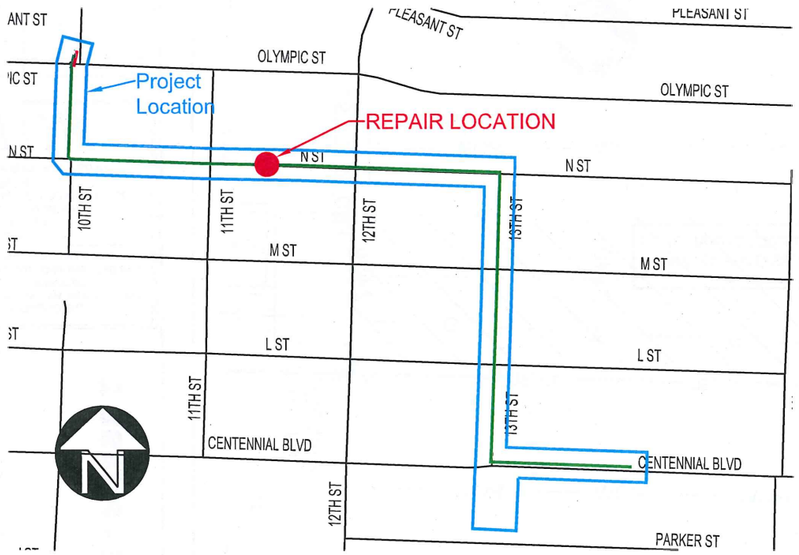

Scale 1" = 500'

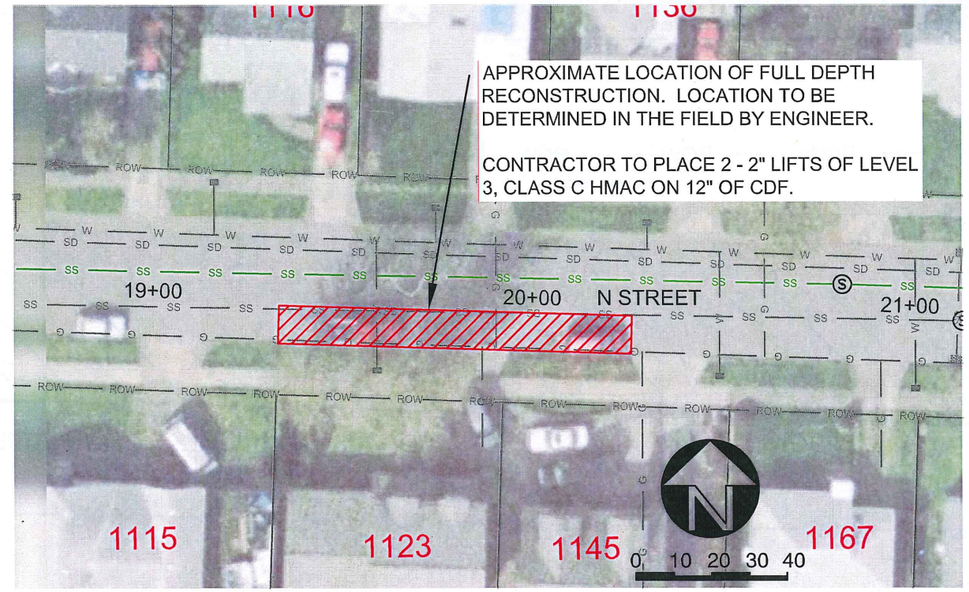

Full Depth Reconstruction Section

Scale 1" = 40'

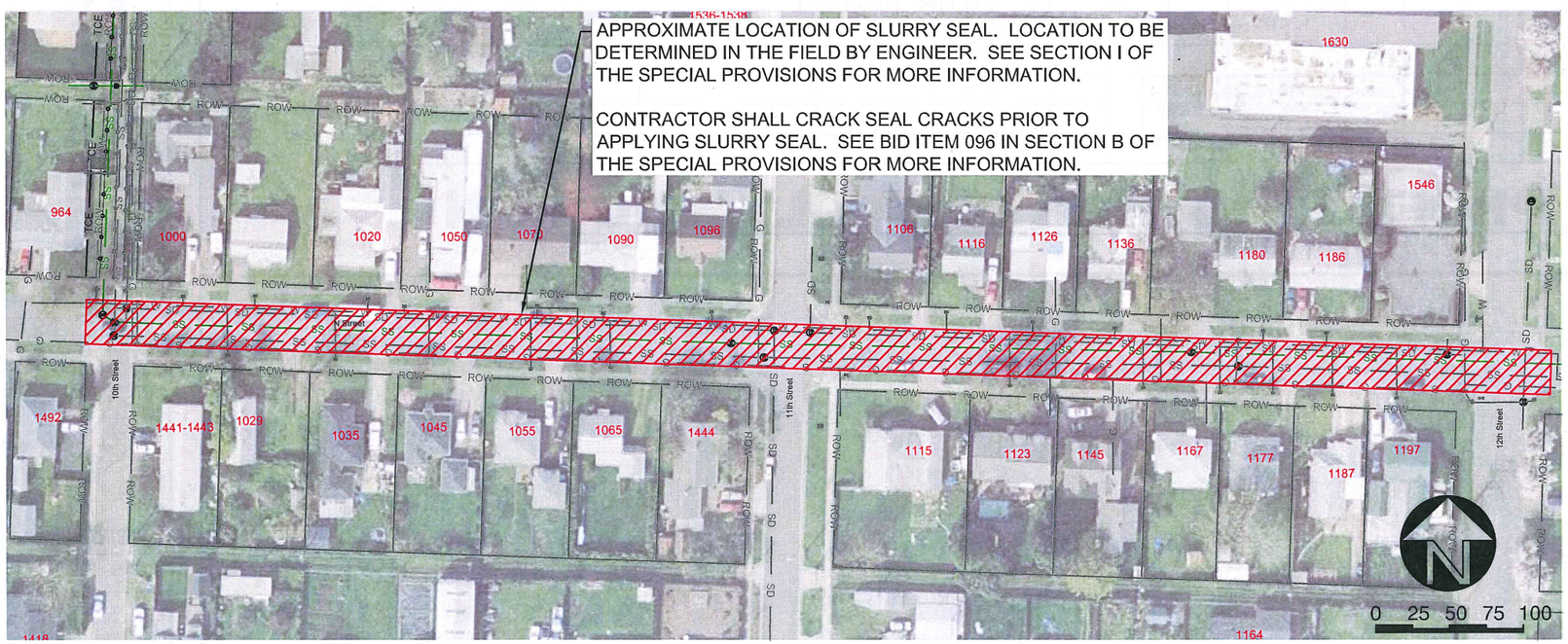

Scale 1" = 100'

No.	Revision/Issue	Date

NOTE:

UTILITY LOCATIONS ARE APPROXIMATE
DO NOT
SCALE OR LOCATE UTILITY LINES OR MAINS FROM THESE DRAWINGS
CALL FOR UTILITY LOCATES
1-800-332-2344

THE CONTRACTOR SHALL BE RESPONSIBLE FOR DETERMINING UTILITY LOCATIONS PRIOR TO BEGINNING OF CONSTRUCTION.
THESE PLANS MAY NOT SHOW ALL UTILITIES OR THE CORRECT LOCATIONS.

10TH AND N SEWER UPGRADE - PHASE 2

PROJECT P21067

City of Springfield
PUBLIC WORKS / ENGINEERING
225 FIFTH STREET, SPRINGFIELD, OR 97477
PHONE (541) 726-3753 FAX (541) 736-1021
INTERNET www.ci.springfield-or.gov

REGISTERED PROFESSIONAL ENGINEER
59,604
Kenneth J. Vogeney 7/1/13
OREGON
JAN 12, 1999
KENNETH JAY VOGENEY

EXPIRES 6/30/14

SHEET

29