City of Springfield
Development and Public Works Department

Authorized by: [signature]
Title: City Engineer
Date: 29 Sept 2016

September 29, 2016

Addendum Number 1 to the Contract Documents for the Invitation to Bid for P21102; Downtown Lighting – Phase 2

The City of Springfield is amending the above mentioned Invitation to Bid issued on September 23, 2016. This Addendum is hereby made a part of the original contract documents to the same extent as though it were originally included therein.

1.) The following is added to Special Provisions, Section B, Electrical Materials, General Construction Practices, Scope of Work and Measurement and Payment, Bid Item No. 0061 Temporary Traffic Control, Traffic Control Plan: The Traffic Control Plan shall include No Parking/Tow Away Zone signs.

2.) The Contractor is responsible for obtaining all permits. The City will be responsible for payment of the fees associated with the electrical permit.

4.) Question: Are there any as-builts available of the current electrical condition?
Response: The only as-builts available are from Oregon Department of Transportation and are being provided. See Attachment 1 to this Addendum.

5.) Question: When we pothole a panel will we have to replace the entire panel?
Response: A determination will be made on a case by case basis. We will require that the minimum amount be replaced taking into consideration both the aesthetics and the structural integrity of the panel.

6.) Question: Are the concrete testing fees the responsibility of the Contractor?
Response: The City will be responsible for the payment of concrete testing up to a maximum of 5 cylinders for the first test and 4 cylinders for all subsequent testing required.

In the event that it is necessary to further amend, revise or supplement any part this Invitation to Bid additional addenda will be posted on the City's website at http://www.springfield-or.gov/dpw/P21102_Downtown_Lighting_Phase_2.htm.

The City shall make a reasonable effort to notify all individuals, firms, and corporations that have purchased a Bid Book and those individuals that attended a Pre-Bid meeting and provided a valid e-mail address on the sign-in sheet when addenda are issued. Failure of the Contractor to receive or obtain such addenda shall not excuse them from compliance, if they are awarded the Contract. The City is not responsible for any explanation, clarification, interpretation or approval made or given in any manner except by written addenda issued by City.

All Addenda issued are considered to be part of the specifications of the Invitation to Bid and, as such, are incorporated into the Contract as specified in Section 104.02 of the Standard Construction Specifications.

By signing below, I acknowledge the receipt of the following Addenda documents and certify that the specifications contained have been considered and incorporated into the bid as presented. No other terms or conditions of the Invitation to Bid are changed as a result of this addendum.

ALL BIDDERS MUST ACKNOWLEDGE THIS ADDENDUM BY SIGNING AND DATING THIS DOCUMENT AND INCLUDING IT AS PART OF THEIR SUBMITTAL PACKAGE.

_____ _____

Signature Date

METAL LIGHT POLE TABLE

POLE NO.	STATION	** ATTACHMENT HEIGHT OF ARM	UPSWEEP ARM LENGTH	UPSWEEP ARM RISE (1)	LAMP WATTS	LUMINAIRE TYPE	MOUNTING BASE HEIGHT (FT.)	PLATE CONFIG.	NOTES
1	"W" 19+70 (Rt.)	29'-0"	15'	5'-10"	135 LPS	Relocate Existing	35	F, BC18.0	HO
TS-2	See T.E. Dwg. No. 9362		—	—		M-N-IV		—	TS, PE
TS-3	See T.E. Dwg. No. 9362		—	—		Relocate Existing		—	TS
4	"W" 23+28 (Rt.)	29'-0"	15'	5'-10"		Relocate Existing		F, BC18.0	HO
5	"W" 24+45 (Lt.)	29'-0"	15'	5'-10"		Relocate Existing		F, BC18.0	HO
6	"W" 25+65 (Lt.)	29'-0"	15'	5'-10"		M-N-IV		F, BC18.0	HO, PE
~~TS-7~~	2nd St. (Pioneer Pkwy. West)	29'-0"	15'	5'-10"		Relocate Existing		F, BC18.0	~~TS~~ HO, PE
TS-8	See T.E. Dwg. No. 9359		—	—		M-N-IV		—	TS, PE
9	"W" 26+97 (Lt.)	29'-0"	15'	5'-10"		Relocate Existing		F, BC18.0	HO
TS-10	See T.E. Dwg. No. 9364		—	—		Relocate Existing		—	TS
11	3rd. St.	29'-0"	15'	5'-10"		Relocate Existing		F, BC18.0	HO
12	"W" 29+57 (Lt.)	29'-0"	15'	5'-10"		Relocate Existing		F, BC18.0	HO
13	"W" 31+00 (Rt.)	29'-0"	15'	5'-10"		Relocate Existing		F, BC18.0	HO
14	"W" 32+35 (Lt.)	29'-0"	15'	5'-10"		Relocate Existing		F, BC18.0	HO
15	"W" 33+52 (Rt.)	29'-0"	15'	5'-10"		Relocate Existing		F, BC18.0	HO
TS-16	See T.E. Dwg. No. 9365		—	—		Relocate Existing		F, BC18.0	HO
17	"W" 35+55 (Rt.)	29'-0"	15'	5'-10"		M-N-IV		F, BC18.0	HO
TS-18	See T.E. Dwg. No. 9360		—	—		M-N-IV		—	TS, PE
19	"W" 36+92	29'-0"	15'	5'-10"		Relocate Existing		F, BC18.0	HO
TS-20	See T.E. Dwg. No. 9366		—	—		Relocate Existing		—	TS
21	"W" 38+83	29'-0"	15'	5'-10"		Relocate Existing		F, BC18.0	HO
22	"W" 40+37	29'-0"	15'	5'-10"		Relocate Existing		F, BC18.0	HO
23	"W" 41+52	29'-0"	15'	5'-10"		Relocate Existing		F, BC18.0	HO
TS-24	See T.E. Dwg. No. 9367		—	—		M-N-IV		—	TS, PE
TS-25	See T.E. Dwg. No. 9367		—	—		Relocate Existing		—	TS
26	"W" 44+18	29'-0"	15'	5'-10"		Relocate Existing		F, BC18.0	HO
27	"W" 45+30	29'-0"	15'	5'-10"		Relocate Existing		F, BC18.0	HO
28	"W" 46+55	29'-0"	15'	5'-10"		Relocate Existing		F, BC18.0	HO
29	"W" 47+69	29'-0"	15'	5'-10"		Relocate Existing		F, BC18.0	HO
30	"W" 49+05	29'-0"	15'	5'-10"		Relocate Existing		F, BC18.0	HO
31	"W" 50+30	29'-0"	15'	5'-10"		Relocate Existing		F, BC18.0	HO
32	"W" 51+29	29'-0"	15'	5'-10"		Relocate Existing		F, BC18.0	HO
33	"W" 52+03	29'-0"	15'	5'-10"		Relocate Existing		F, BC18.0	HO
TS-34	See T.E. Dwg. No. 9368		—	—		Relocate Existing		—	TS
35	10th 9+62	29'-0"	15'	5'-10"		M-N-IV		F, BC18.0	HO, PE
36	"E" 72+62	29'-0"	15'	5'-10"		Relocate Existing		F, BC18.0	HO
TS-37	See T.E. Dwg. No. 9361		—	—	135 LPS	M-N-IV	35	—	TS, PE

LEGEND

** = FIELD VERIFY ATTACHMENT HEIGHT OF ARM BEFORE ORDERING.

F = FIXED BASE ILLUMINATION POLE (SEE DWG. NO. 40398)

LPS = LOW PRESSURE SODIUM

(1) = ATTACHMENT HEIGHT OF ARM MAY VARY DUE TO DIFFERENCE CLOSE UP IN MANUFACTURER'S ARM RISE.

M-N-IV = MEDIUM-NONCUTOFF-TYPE IV

HO, H90 = ORIENTATION, IN DEGREES, OF LUMINAIRE ARM TO HANDHOLE SHOWN IN CLOCKWISE DIRECTION

TS = JOINT USE TRAFFIC SIGNAL / ILLUMINATION POLE.

PE = PHOTOELECTRIC CONTROL AND RECEPTACLE SUPPLIED WITH LUMINAIRE.

BC 18.0 = BOLT CIRCLE IN BASE PLATE INDICATED IN INCHES.

GENERAL NOTES:

All material and workmanship shall conform to the Standard Specifications for Highway Construction of the Oregon State Highway Division.

Illumination is designed in accordance with A.A.S.H.T.O. "An Informational Guide for Roadway Lighting", 1984.

All electrical equipment shall conform to the current standards of the National Electrical Manufacturers Association (NEMA) and the Underwriter's Laboratories, Inc. (UL), wherever applicable. In addition to the requirements of the plans, Standard Specifications, and the special provisions, all materials and workmanship shall conform to the current requirements of the National Electrical Code (NEC), National Electrical Safety Code, Standards of the American Society for Testing and Materials (ASTM), American National Standards Institute (ANSI), and any local ordinances which may apply.

DESIGN VALUES		
LOCATION	AVE. MAINT. fc	AVE./MIN. UNIFORMITY
"W" Line	1.0 fc	2.5 : 1

MONTHLY SYTEM ENERGY UTILIZATION (No Festoon)	
CABINET 100	750 KWH @ 351 HR./MO.
CABINET 200	800 KWH @ 351 HR./MO.

DATE	REVISION	BY
10-22-87	Revised Pole No. 7	GLH

REGISTERED PROFESSIONAL ENGINEER 3895 OREGON NOV. 22, 1983 WILLIAM A. WIRT
BRIDGE ENGINEER

REGISTERED PROFESSIONAL ENGINEER 4474 OREGON OCT. 30, 1986 J. E. CHIDSEY
PRINCIPAL STRUCTURAL DESIGN ENGINEER

APPROVED:
BRIDGE ENGINEER PE
ASSISTANT STATE HIGHWAY ENGINEER PE

DESIGNED: G. HOFFECKER
DRAWN: PHILIP AMAYA
CHECKED:
REVIEWED: J.E. Chidsey 9-2-87
REVIEWED: J.E. Bjorkstrand

OREGON DEPARTMENT OF TRANSPORTATION
BRIDGE DESIGN SECTION

WILLAMETTE RIVER-20th ST. (SPRINGFIELD) SEC.
McKENZIE HIGHWAY LANE COUNTY

ROADWAY ILLUMINATION TABLE & NOTES

ACCOMPANIED BY DWGS. 43419 thru 43421, 40398, 34896

DATE June 1987 CALC.BOOK 2441 SHEET 1 OF 4
BRIDGE NO. 17012 DRAWING NO. 43418

ZG3:[200,201]PGA17012.HOF;1 [VIEW=1]

ATTACHMENT 1-1

MAIN ST. STREET LIGHTING

TABLES & NOTES

LEGEND

"N" — INSTALL METAL LIGHT POLE NO. "N" FOR ROADWAY ILLUMINATION. (SEE METAL LIGHT POLE TABLE).

TS "N" — JOINT USE TRAFFIC SIGNAL POLE NO. "N" (SEE T.E.S. DWG'S. AND METAL LIGHT POLE TABLE).

EXISTING STREET ILLUMINATION ON UTILITY POLE.

EXISTING STREET ILLUMINATION

Rel Lum — RELOCATE EXISTING LUMINAIRE TO NEW LOCATION INDICATED. CONNECT MULTI-TAP BALLAST FOR 240 VOLTS. WIPE CLEAN REFLECTOR AND REFRACTOR. INSTALL NEW 135 WATT LOW PRESSURE SODIUM LAMP.

Rem — REMOVE EXISTING ILLUMINATION POLE ARM AND REFLECTOR.

PS — POWER SOURCE: 120/240 VOLTS, SINGLE PHASE.

S" — INSTALL "S" SIZE GALVANIZED STEEL ELECTRICAL CONDUIT.

S — INSTALL "S" SIZE RIGID NONMETALLIC ELECTRICAL CONDUIT.

N / S — INSTALL ELECTRICAL CONDUCTORS ("N" = NUMBER OF CONDUCTORS, "S" = SIZE OF CONDUCTORS).

G — INSTALL ONE NO. 10 BARE COPPER GROUND WIRE.

L #"N" — ROADWAY ILLUMINATION CIRCUIT NO. "N".

R #"N" — RECEPTACLE CIRCUIT No. "N"

J / 6 — INSTALL 6"x6"x4" GALVANIZED CAST IRON ELECTRICAL JUNCTION BOX. (NEMA 4). OUTSIDE FLANGED, RECESSED COVER TYPE FOR FLUSH MOUNTING.

INSTALL CONDUIT SWEEP IN THE DIRECTION SHOWN. CAP WITH WATERTIGHT FITTING.

WH — INSTALL AS DIRECTED BY THE SPRINGFIELD UTILITY BOARD ON UTILITY POLE A SERVICE ENTRANCE HEAD ON 2" GALVANIZED STEEL CONDUIT. ALSO PROVIDE DRIP LOOP IN WIRE.

C/100 , C/200 — INSTALL 12" x 18"x 8" GALVANIZED STEEL CABINET SEE SERVICE WIRING DIAGRAM DISTRIBUTION AND CONTROL CENTER FOR EQUIPMENT. (This Dwg.)

Fes — ATTACH FESTOON BRACKET (SUPPLIED BY OTHERS) TO POLES AS DIRECTED BY THE PROJECT ENGINEER. (See Dwg. 43421)

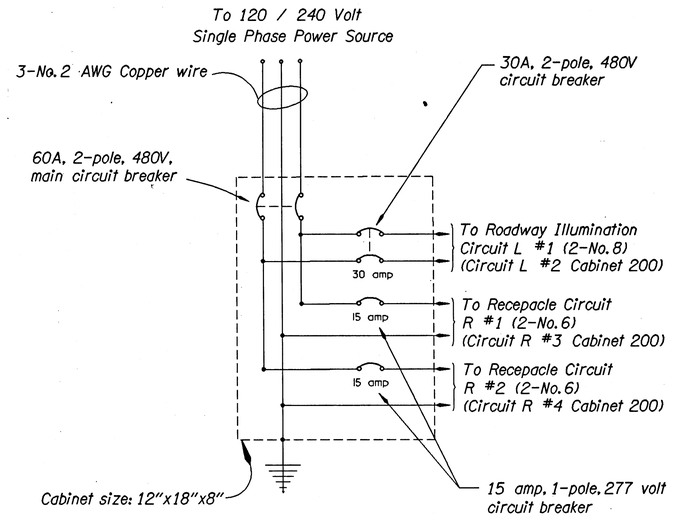

C/100 SERVICE WIRING DIAGRAM DISTRIBUTION & CONTROL CENTER

(C/200 Cabinet similar except as shown)

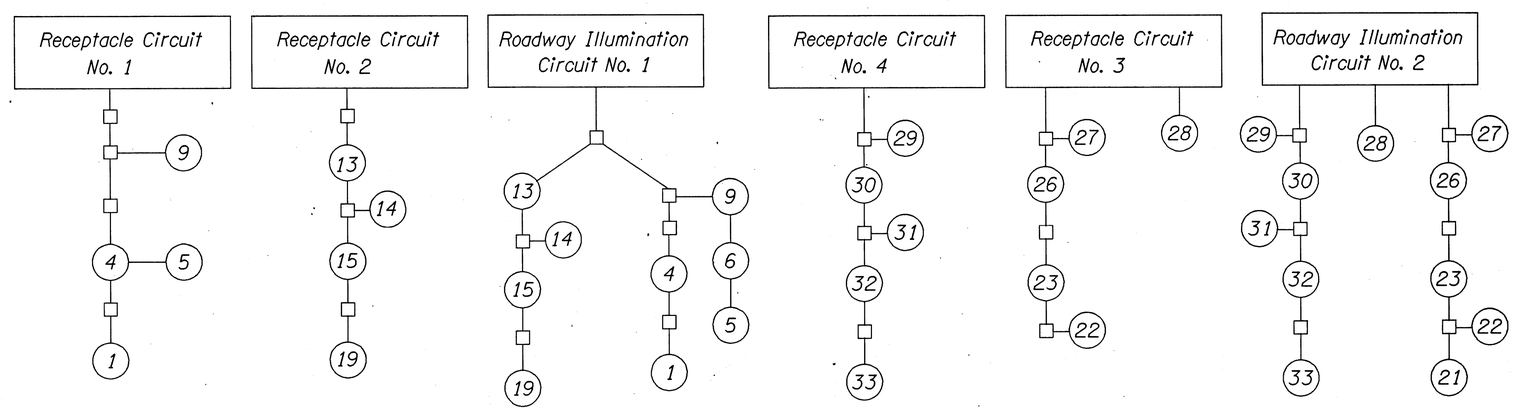

DATE	REVISION	BY

APPROVED: Walter J. Hart PE — BRIDGE ENGINEER — PE NO. 3895

G. HOFFECKER — DESIGNED — PE NO.

PHILIP AMAYA — DRAWN

CHECKED — 0-2-87

REVIEWED — PE NO. 4474

J.E. Backstrand — REVIEWED

OREGON DEPARTMENT OF TRANSPORTATION
BRIDGE DESIGN SECTION

WILLAMETTE RIVER-20th ST. (SPRINGFIELD) SEC.
McKENZIE HIGHWAY — LANE COUNTY

ROADWAY ILLUMINATION LEGEND AND DISTRIBUTION DETAILS

DATE June 1987 — CALC.BOOK 2441 — SHEET 2 OF 4
BRIDGE NO. 17012 — DRAWING NO. 43419

ZG3:[200,201]PGA17012.HOF;1 [VIEW=3]

ATTACHMENT 1-2

MAIN ST. STREET LIGHTING

DISTRIBUTION DETAILS

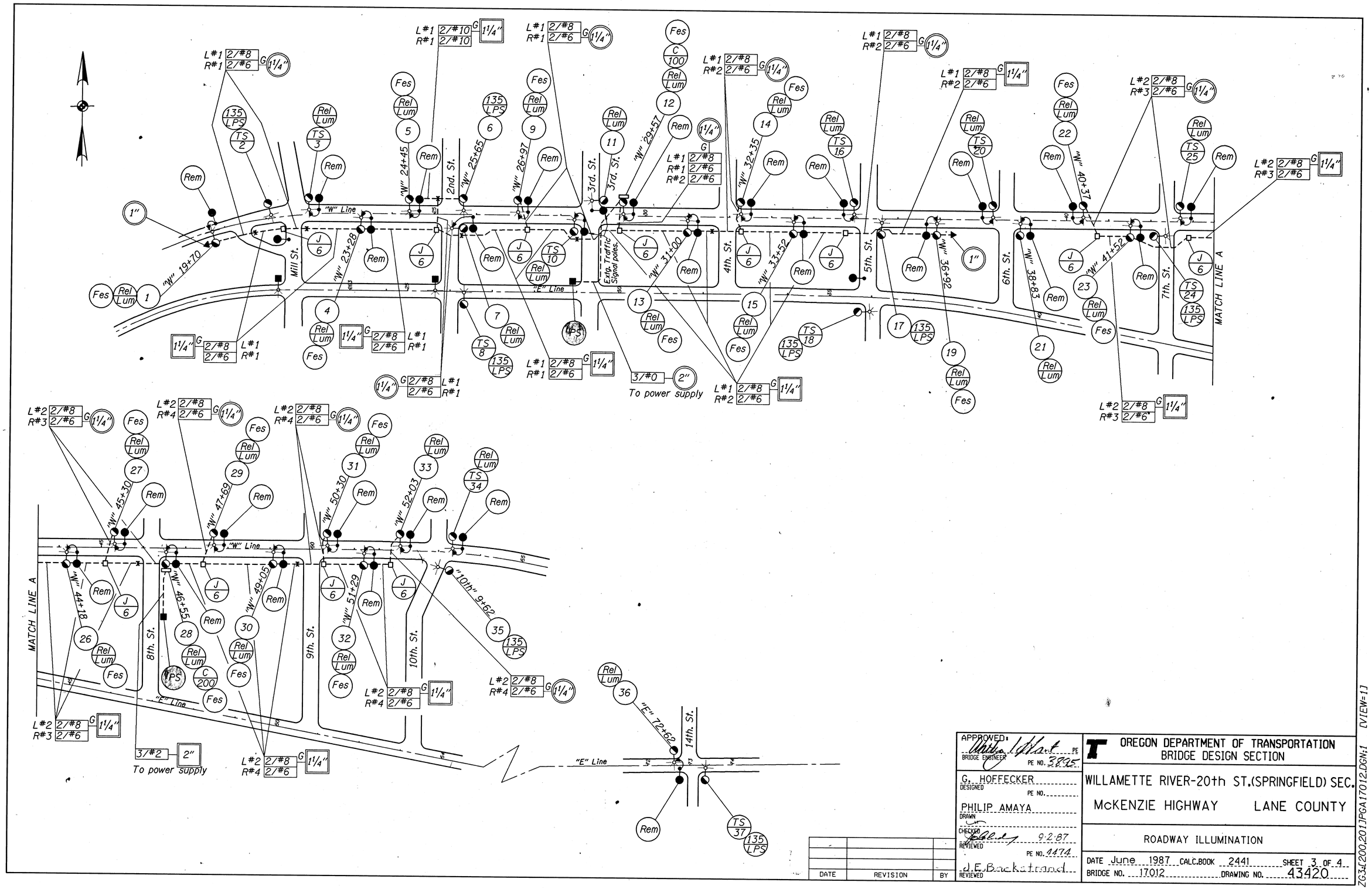

DATE	REVISION	BY

APPROVED: Milton L. Hart PE
BRIDGE ENGINEER PE NO. 3895

G. HOFFECKER
DESIGNED PE NO.

PHILIP AMAYA
DRAWN

CHECKED 9-2-87
REVIEWED PE NO. 1474

J.E. Backstrand
REVIEWED

OREGON DEPARTMENT OF TRANSPORTATION
BRIDGE DESIGN SECTION

WILLAMETTE RIVER-20th ST.(SPRINGFIELD) SEC.

McKENZIE HIGHWAY LANE COUNTY

ROADWAY ILLUMINATION

DATE June 1987 CALC.BOOK 2441 SHEET 3 OF 4
BRIDGE NO. 17012 DRAWING NO. 43420

Z63:[200.201]PGA17012.DGN;1 [VIEW=1]

ATTACHMENT 1-3

MAIN STREET LIGHTING

ROADWAY DIAGRAM

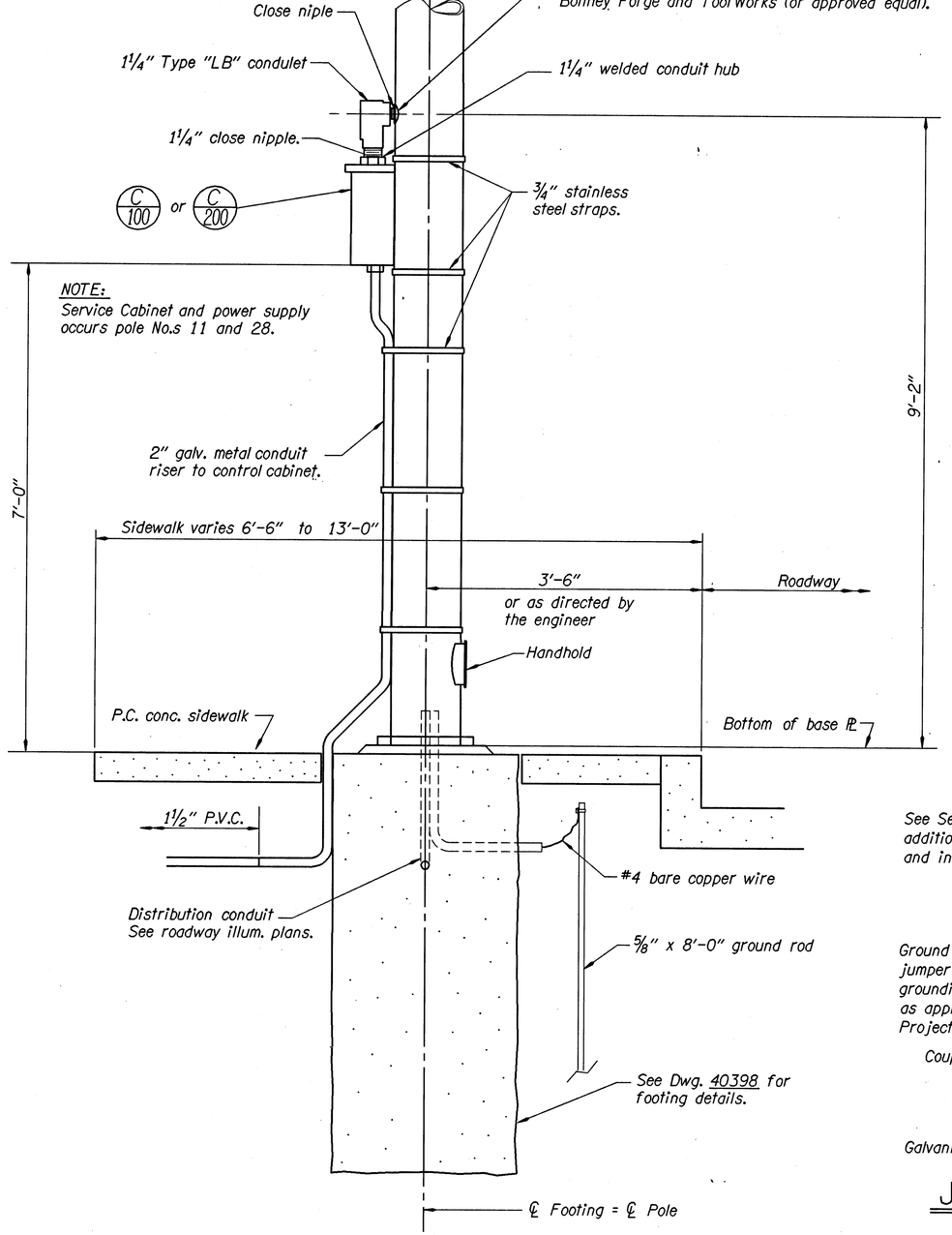

POLE ELEVATION

Scale: 1" = 1'-0"

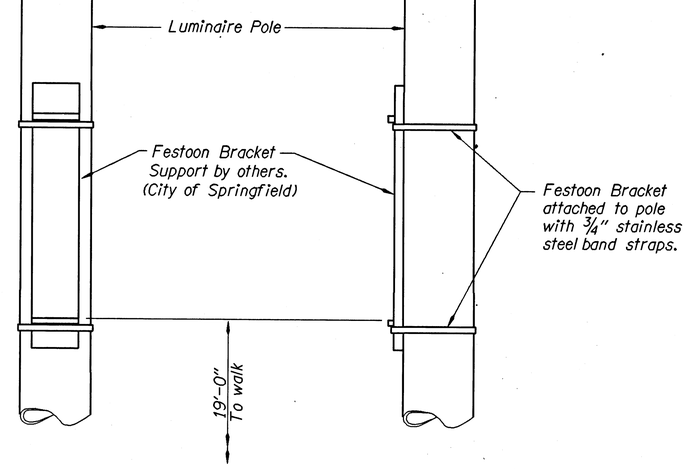

FESTOON BRACKET DETAIL

Scale: 1" = 1'-0"

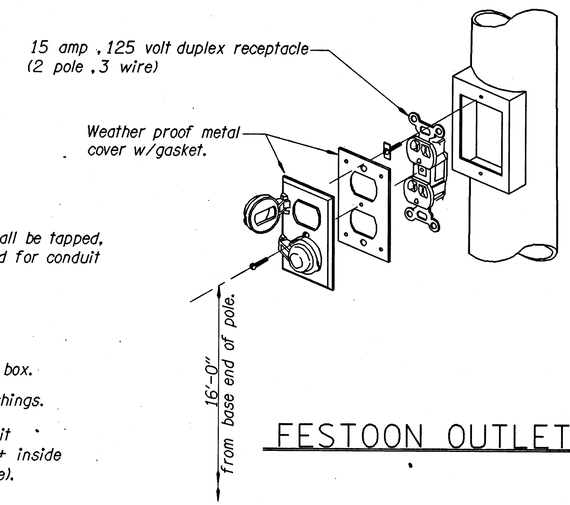

FESTOON OUTLET DETAIL

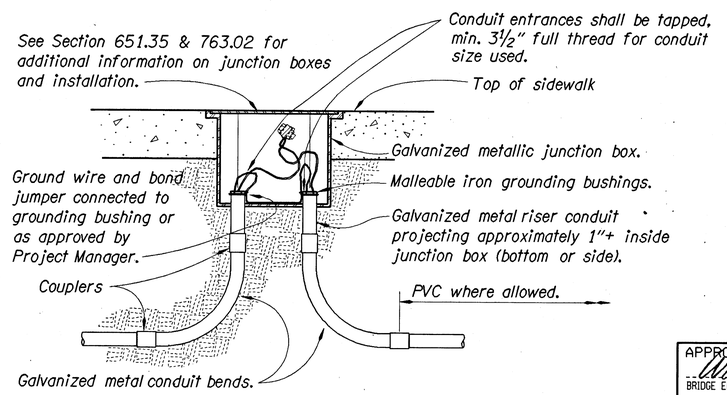

JUNCTION BOX INSTALLATION

scale: 1½" = 1'-0"

DATE	REVISION	BY

APPROVED: Walter J. Hart PE
BRIDGE ENGINEER PE NO. 3895

G. HOFFECKER
DESIGNED PE NO.

PHILIP AMAYA
DRAWN

CHECKED 9-2-87
REVIEWED PE NO. 4474

J. E. Backstrand
REVIEWED

OREGON DEPARTMENT OF TRANSPORTATION
BRIDGE DESIGN SECTION

WILLAMETTE RIVER-20th ST. (SPRINGFIELD) SEC.
McKENZIE HIGHWAY LANE COUNTY

CABINET/POLE AND FESTOON DETAILS

DATE June 1987 CALC.BOOK 2441 SHEET 4 OF 4
BRIDGE NO. 17012 DRAWING NO. 43421

ZG3:[200,201]PGA17012.HOF;1 [VIEW=2]

ATTACHMENT 1-4

MAIN STREET LIGHTING DETAILS

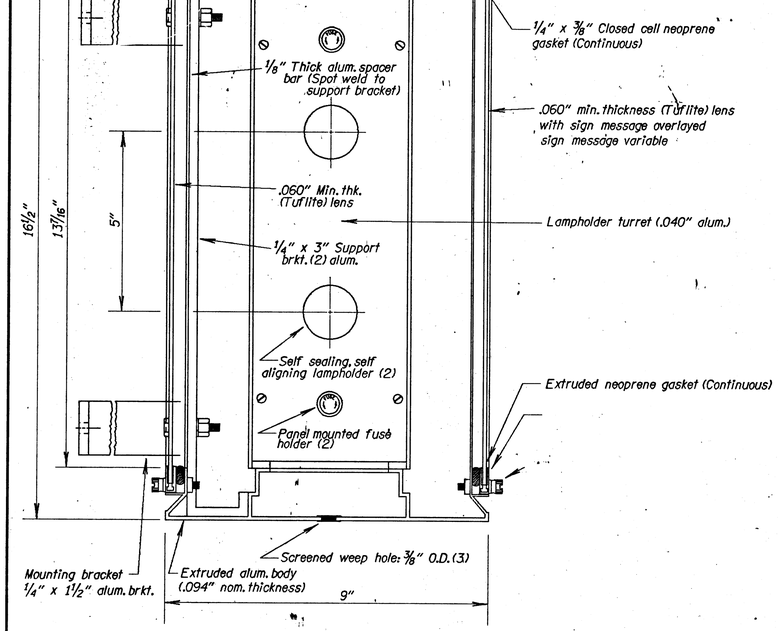

TYPICAL CROSS SECTION

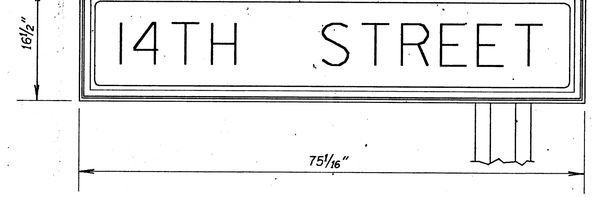

PRIMARY SIDE

(6" D letters, green background w/white letters and 1/2" border)

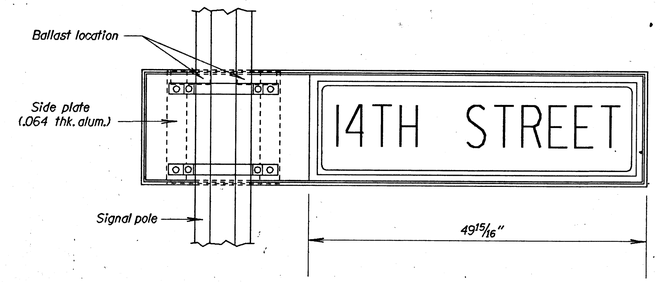

SECONDARY SIDE

(5" C letters, green background w/white letters and 1/2" border)

72 INCH DOUBLE FACED SIGN

INTERIOR ILLUMINATED STREET NAME SIGN

(Material as recommended by the manufacturer)

STANDARD COLOR CODE FOR TRAFFIC SIGNAL CONTROL CABLE

CONDUCTOR NUMBER	BASE COLOR	TRACER COLOR	12 CONDUCTOR CABLE	6 CONDUCTOR CABLE	3 CONDUCTOR CABLE
1	Black		Main St. "WALK"	Main St. "WALK"	Main Pushbutton
2	White		Common	Common	Common
3	Red		Main St. Red	Main or Cross St. Red or Cross St. "DON'T WALK"	Cross Pushbutton
4	Green		Main St. Green	Main or Cross St. Green or Cross St. "WALK"	
5	Orange		Main St. Amber	Main or Cross St. Amber	
6	Blue		Main St. "DON'T WALK"	Main St. "DON'T WALK"	
7	White	Black	Special		
8	Red	Black	Cross St. Red		
9	Green	Black	Cross St. Green		
10	Orange	Black	Cross St. Amber		
11	Blue	Black	Cross St. "DON'T WALK"		
12	Black	White	Cross St. "WALK"		
13	Red	White			
14	Green	White			
15	Blue	White			
16	Black	Red			
17	White	Red			
18	Orange	Red			
19	Blue	Red			
20	Red	Green			
21	Orange	Green			

NOTE: These color codes shall be used in all traffic signal heads, junction boxes, terminal panels and controller wiring panels. Any change or substitutions must be approved by the Engineer.

In cases where more than one choice exists for a single color, the correct choice will be determined by the signal indication at which the cable terminates.

Conductors may be employed for special circuits if the uses listed in the table are not applicable. When detector, push button or other special circuits are required, each conductor must be labled on both sides of any junction, splice, etc., according to the conductor number and use.

The standard color code shall be maintained even though two smaller cables are substituted in order to obtain the specified number of conductors in any one cable.

The conductors in one of the cables must be labled at all junctions, splices, or terminal points according to the table above.

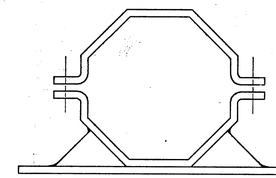

STANDARD MOUNTING BRACKET FOR OCTAGON POLES

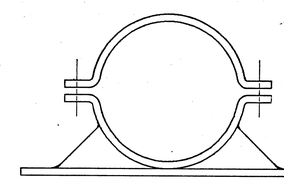

STANDARD MOUNTING BRACKET FOR ROUND POLES

REGISTERED PROFESSIONAL ENGINEER 3893 OREGON NOV. 4, 1955 L. E. GEORGE 8/4/87

DESIGNED BY: H. NABGELL
CHECKED BY: WH
DRAWN BY: T. Holsey

OREGON STATE HIGHWAY DIVISION
TRAFFIC ENGINEERING SECTION

TRAFFIC SIGNAL INSTALLATION
WILLAMETTE RIVER - 20TH. ST. (SPRINGFIELD) SEC.
McKENZIE RIVER
LANE COUNTY

DATE: June 1987

T.E. DWG. NO. 9374

ZG24:270.101MILRIV20.SP8.1 7-20-87

ATTACHMENT 1-5

MAIN STREET DETAILS