City of Springfield
Public Improvement Project

Invitation to Bid for:

P21052
Springfield Mill Race Stormwater Facility, Booth Kelly Trailhead and Mill Race Path

The information provided is an abridged version of the complete Invitation to Bid and is provided for review and informational purposes only. To submit a bid for consideration, a complete set of bid documents is required.

A complete set of bid documents may be viewed or purchased at the address shown below:

City of Springfield
Development and Public Works Department
225 Fifth Street
SE Quad
Springfield, OR 97477

Contact: Terri White at 541-726-3628 or twhite@springfield-or.gov

City of Springfield
Community Development Division

SPECIFICATIONS
for

P21052

Springfield Mill Race Stormwater Facility, Booth Kelly Trailhead and Mill Race Path

MANDATORY PRE-BID MEETING		**BID OPENING**	
Date:	**June 16, 2015**	**Date:**	**June 30, 2015**
Time:	**9:00 a.m.**	**Time:**	**2:00 p.m.**
Location:	**City of Springfield**	**Location:**	**City of Springfield**
	City Hall		**City Hall**
	Library Meeting Room		**Room: Jesse Maine Room**
	225 Fifth Street		**225 Fifth Street**
	Springfield, OR 97477		**Springfield, OR 97477**

The deadline for submission of project specific questions prior to bid opening as specified in Section 3.3 of the Instruction to Bidders is June 23, 2015 at 1:00 p.m.

This Project is funded in full or in part by:

☐ State Funds
☑ Neither State nor Federal Funds

Please Take Note: All information required must be submitted as directed.

For your Bid to be considered responsive by the City of Springfield you must include all documents included in the Invitation to Bid with your Bid. Additionally, any addendums or revisions must be acknowledged and submitted with your Bid. *The only exception to this is any plans or drawings, which are not required to be submitted as a part of your Bid.*

All documents requesting information must be completed in full and signed where appropriate. *The only exceptions to this requirement are the sample Performance Bond, Payment Bond and Contract documents which are provided here as a reference. However, if you are awarded the Bid, you will be required to submit fully executed copies of these documents upon request.*

A complete description of submittal requirements can be found in the Instruction to Bidders document included in this request for bid under the heading; **5. Bid.**

CITY OF SPRINGFIELD, OREGON
Invitation to Bidders

Public Works Improvement Project

Sealed bids will be received at the office of the Finance Director, Robert Duey at the City of Springfield Finance Department, 225 Fifth Street, Springfield, OR 97477, until, but no later than, 2:00 p.m. Local Time, the 30th day of June, 2015 and opened the same day at the same location, for the construction of the following public works improvement project in the City of Springfield:

Project No. P21052 **Title:** Springfield Mill Race Stormwater Facility, Booth Kelly Trailhead and Path

Description: This construction project will include earthwork, soil disposal, grading, stormwater infrastructure, trailhead, path with bridge, and site restoration.

Bid documents are available from the Department of Development and Public Works, City of Springfield, 225 Fifth Street, Springfield, OR 97477, for a non-refundable fee of $40.00 and are available for viewing at this location. Bid documents available on line at http://www.springfield-or.gov/DPW/InvitationBid.htm and those on file at plan centers are incomplete and cannot be used to submit bids. The 1994 edition, as most recently amended, of the City's Standard Construction Specifications, with subsequent revisions, are available for a fee of $42.00 or can be viewed on-line at http://www.springfield-or.gov/DPW/StandardConstructionSpecifications.htm.

A **Mandatory** pre-bid meeting will be held on June 16, 2015 at 9:00 a.m. local time in the Library Meeting Room at Springfield City Hall, 225 Fifth Street, Springfield, OR.

All questions should be addressed to Terri White, Engineering Assistant, at 541-726-3628 or twhite@springfield-or.gov. The deadline for submission of questions regarding this Invitation to Bid is June 23, 2015 at 1:00 p.m. local time. Contact with any other City officials may be grounds for disqualification of bid.

No Bid will be received or considered by the City unless the bidder has a current, valid certificate of registration issued by the Construction Contractor's Board as defined in ORS 701.005 and/or a valid landscape contractors license as defined in ORS 671.520 by the State Landscape Contractor's Board, as applicable, at the time the Bid is made and unless the bid contains a statement by the bidder as part of his/her bid that the provisions required by ORS 279C.838 through ORS 279C.870 shall be included in his/her contract. In accordance with ORS 279C.365, the City of Springfield will require that each bid must contain a statement as to whether the bidder is a resident bidder, as defined in ORS 279A.120.

The City of Springfield encourages contractors, sub-contractors and vendors who are minority, woman-owned and emerging small businesses to participate in City projects.

The City of Springfield may reject any or all bids not in compliance with all prescribed public bidding procedures and requirements, including the requirement to demonstrate the bidder's responsibility under ORS 279C.375, or waive minor irregularities not affecting substantial rights and may reject for good cause any or all bids upon a finding of the City of Springfield it is in the public interest to do so and accept such bids that in the opinion of the Springfield City Council are in the best interest of the City.

Bids will be accepted and awarded in accordance with the City of Springfield's document on general conditions and standard specifications for public works construction.

Note: If applicable to this project, the First-Tier Subcontractor Form must be completed in full and submitted by the specified deadline or the bid will be rejected.

Robert J Duey

ROBERT J. DUEY
Finance Director

Published: Daily Journal 06/10/15
Register Guard Publishing 06/10/15

Solicitation Number 1470

City of Springfield
225 Fifth Street
Springfield, OR 97477

Bid Submittal

Project No. P21052
Project Title: Springfield Mill Race Stormwater Facility, Booth Kelly Trailhead and Mill Race Path

The lowest responsive bidder shall be determined based on the combined totals of Schedules A and B. However, should the City determine it is not in the best interest of the City to award Schedule B, the lowest responsive bidder shall be determined based on the total of Schedule A.

Bid Items:

Item No.	Description	Specification Number	Approx. Quantity	Per	Unit Price	Total Price Extension
Schedule A						
Site Set-up and Demolition						
1	Mobilization/Demobilization	00210.90	1	LS		
2	Surveying as Specified	00330.95	1	LS		
3	Traffic Control Measures	00225.90	1	LS		
4	Construction Entrance/Tire Wash/Concrete Wash	00280.90	1	LS		
5	Staked Turbidity Barrier	00280.90	250	LF		
6	Compost Filter Berm	00280.90	4,800	LF		
7	Clearing and Grubbing	00320.90	1	LS		
8	Temporary Control and Diversion of Water	00290.90	1	LS		
9	Fence Removal and Relocation	00310.91	1	LS		
10	Demolition, Pipe Removal and Disposal	00310.91	1	LS		
Stormwater Facility						
11	General Excavation	00330.93	250,000	BCY		
12	Transportation and Disposal	00290.90	368,200	CY		
13	Contaminated Media Disposal	00290.90	150	TON		
14	Dewatering	00405.90	1	LS		
15	48-inch Stormwater HDPE Pipe	00445.91	120	LF		
16	10-inch Sanitary Sewer PVC Pipe	00445.91	340	LF		
17	Sanitary Sewer Manholes	00470.90	2	EA		
18	Stormwater Facility Control Structures	00470.90	1	LS		
19	RipRap Protection	00390.90	1	LS		
20	Grass Pavers	00760.90	35,000	SF		
21	Aggregate Base	00641.90	3,800	CY		
22	Asphalt Transitions – 4-inch thick	00745.90	65	TON		
Site Restoration and Plantings						
23	Permanent Seeding	01030.90	12.1	ACRE		
24	Plugs	01040.90	9,650	EA		
25	Trees	01040.90	119	E		
26	Shrubs - 1 gallon	01040.90	105	EA		
27	Imported Topsoil - 6 inch	01040.90	7,900	CY		
28	Organic Mulch: 2 inch compost	01040.90	3,200	CY		
29	Irrigation System	01120.90	1	LS		
30	Wattles	00280.90	7,000	LF		
31	Erosion Control Matting	00280.90	50,000	SY		
					Total Schedule A Bid Items	**$**
Schedule B						
Site Set-up and Demolition						
32	Mobilization/Demobilization	00210.90	1	LS		
33	Surveying as Specified	00330.95	1	LS		
34	Compost Filter Berm	00280.90	850	LF		
Trailhead and Path						
35	General Excavation	00330.93	1,800	BCY		
36	Transportation and Disposal	00290.90	2,340	CY		
37	Keystone Wall	00511.90	1	LS		

38	ConSpan Bridge and Foundations	00551.90	1	LS		
39	Railing	00587.90	1	LS		
40	Aggregate Base	00641.90	2,300	CY		
41	Asphalt Parking Lot and Path	00745.90	1,000	TON		
42	Concrete Flat Work	00756.90	1	LS		
43	Concrete Low Wall and In-Lay	00540.90	1	LS		
44	4-inch Sanitary Sewer PVC Pipe	00445.91	45	LF		
45	8-inch Stormwater PVC Pipe	00445.91	100	LF		
46	Stormwater Manhole	00470.90	1	EA		
47	Water Utility	01140.90	1	LS		
48	Telecom Utility	00960.90	1	LS		
49	Electrical and Lighting	00960.90	1	LS		
50	Bollard	00815.90	2	EA		
51	Bollard Boulders and Boulders	00815.90	1	LS		
52	Pavement Markings	00860.90	1	LS		
53	Signs	00940.90	1	LS		
Furnishings and Amenities						
54	Restroom	01095.90	1	LS		
55	Kiosk	01095.90	1	LS		
56	Bench	01095.90	4	EA		
57	Picnic Table	01095.90	2	EA		
58	Bike Rack	01095.90	4	EA		
59	Receptacles	01095.90	2	EA		
60	Security Camera	01095.90	2	EA		
Site Restoration and Plantings						
61	Permanent Seeding	01030.90	0.36	ACRE		
62	Rain Garden	01040.90	1	LS		
63	Rain Garden Planting	01040.90	1	LS		
64	Perennials	01040.90	203	EA		
65	Trees	01040.90	18	EA		
66	Shrubs - 1 gallon	01040.90	59	EA		
67	Shrubs - 2 gallon	01040.90	40	EA		
68	Shrubs - 3 gallon	01040.90	28	EA		
69	Imported Topsoil - 6 inch	01040.90	450	CY		
70	Organic Mulch: 2 inch compost	01040.90	150	CY		
71	Irrigation System	01120.90	1	LS		
Total Schedule B Bid Items						**$**
Total of Schedule A and Schedule B Combined:					**$**	

Terms, Declarations and Bid Submittal

Bidder's Understanding

Bidders shall determine for themselves all the conditions and circumstances affecting the projected cost of the proposed work by personal examination of the site, Contract documents, and by such other means they may deem to be necessary. It is understood and agreed that in the event the City has obtained information from data at hand regarding underground or other conditions or obstructions depicted in the Contract documents, there is no expressed or implied agreement that such conditions are fully or correctly shown, and the Bidder must take into consideration the possibility that conditions affecting the cost or quantity of work may differ from those indicated.

The Bidder is familiar with and is satisfied as to all federal, state and local laws and regulations that may affect cost, progress, and performance of the work.

Bid

The undersigned Bidder having examined the Specifications and Contractual Documents and having satisfied themselves as to all conditions to be encountered, hereby proposes to furnish all labor, material and equipment and perform all work necessary to complete Project No P21052 in accordance with this bid, the Contract Plans, City of Springfield Standard Construction Specifications, 1994 Edition, and all subsequent modifications, the 2015 Oregon Standard Specifications for Construction, the Special Provisions, and all other Contractual Documents at the prices and on the terms herein contained.

The unit price bids are submitted with the understanding that the quantities stated are approximate and are given only as the basis of calculation for comparison of bids and determining that the unit prices are balanced and that final payment for all unit price bid items will be based on actual quantities.

It is understood that in the instance of a discrepancy between the unit price and the extension (total price extension) the unit price shall govern. The extension shall be determined by multiplying the unit price by the number of units (approximate quantity).

Bid Guarantee

As required by ORS 279C.365(4) each bid shall be accompanied by a Bid Bond, cash, or a certified or cashier's check written upon a bank in good standing and in a form acceptable to the City, payable to the Finance Director of the City of Springfield, Oregon, in an amount equal to at least 10 percent of the total amount of the Bid. Bid Bonds shall be issued by a surety company registered to issue bonds in the State of Oregon, and utilizing a bond form acceptable to the City. The City will accept AIA Document A310-2010. The Bid Bond may not be altered.

Such Bid Guarantee shall be forfeited and become the property of the City in case the Bidder shall fail or neglect to furnish a satisfactory Performance and/or Payment Bond issued by a viable bond company acceptable to the City as required by ORS 279C.380 and to execute the Contract within ten (10) days (Saturday, Sunday, and holidays excepted) after receiving Contract from the City for execution. For information regarding Performance and Payment Bond requirements see City of Springfield Contract document, Section 5. City Bonding.

Bid Acceptance Period

This bid will remain subject to acceptance for a period of 60 days after the bid opening, or for such longer period of time that the Bidder may agree to in writing upon request of the City.

Liquidated Damages

The City of Springfield and the Contractor agree that; (a) the amounts so fixed are reasonable forecasts of just compensation for the harm that is caused by the breach; (b) the harm that is caused by the breach is one that is incapable of or very difficult of accurate estimation; and, (c) the amount so fixed is not fixed as a penalty to coerce performance of the Contract but is rather intended to be a genuine pre-estimation of injury to the City of Springfield in lieu of performance within the contract time by the Contractor.

a. Delay

It is agreed by the City of Springfield and by the Contractor that the need exists for a damage provision in the event the Contractor fails to complete the work within the Contract time specified, or any extension thereof, by the City of Springfield. The City of Springfield and the Contractor further agree that the Contractor shall be liable to the City of Springfield for fixed, agreed and liquidated damages for each and every calendar day of delay in the amount of $1,000.00 per day in accordance with Subsection 108.07 of the Standard Construction Specifications.

b. Failure to Report Spills

The Contractor also agrees to liquidated damages in the amount of $500.00 per incident for failure to report sewage spills plus an amount sufficient to reimburse the City for any civil and administrative penalties paid by the City as a result of the Contractor's failure to report. Failure to report sewage spills may subject the City to (1) civil penalties of up to $32,500.00 per day of violation pursuant to Section 309(d) of the Clean Water Act, 33 U.S.C. § 1319(d); (2) administrative penalties of up to $11,000.00 per day for each violation, pursuant to Section 309(g) of the Clean Water Act, 33 U.S.C. § 1319(g); or (3) civil action in federal court for injunctive relief pursuant to Section 309(b) of the Clean Water Act, 33 U.S.C. § 1319(b).

Contract Time of Completion

The Contractor shall not begin work under this bid until written Notice to Proceed has been received. The Contractor shall complete all sanitary sewer modification work to be done under this contract, including the tie to the restroom facility, no later than September 30, 2015. The Contractor shall complete all work under this contract, including seeding and plant establishment, no later than December 31, 2016.

The Contractor shall apply for any extensions of time as specified in Subsection 108.06 of the Standard Construction Specifications.

Certifications

The undersigned hereby certifies that:

1.) If awarded the Contract, that they shall fully comply with all provisions regarding the prevailing wage rates as required by ORS 279C.800 to 279C.870 and/or 40 U.S.C. 2762 as applicable.

2.) The Contractor, Subcontractor, suppliers of materials or services, and others engaged by the contractors, shall comply at all times with and observe all such laws, ordinances, regulations, orders, and decrees; and shall hold harmless and indemnify the City of Springfield and its representatives against any claim or liability arising from or based on the violation of any such law, ordinance, regulation, order, or decree.

3.) In accordance with ORS 279C.505, the Contractor will;

   a) Make payment promptly, as due, to all persons supplying to the Contractor labor or material for the performance of the work provided for in the Contract.

   b) Promptly pay all contributions or amounts due the State Industrial Accident Fund, or private carrier of accident insurance, from such Contractor or Subcontractor incurred in the performance of the Contract. If a private carrier is used, the Contractor shall notify the Engineer as to the carrier's name and address before commencement of work.

   c) Not permit any lien or claim to be filed or prosecuted against the state or a county, school district, municipality, municipal corporation or subdivision thereof, on account of any labor or material furnished.

   d) Pay to the Department of Revenue all sums withheld from employees under ORS 316.167.

   e) Have an employee drug testing program in place at the time of signing the contract and will maintain such drug testing program in place over the life of the Contract.

4.) In accordance with ORS 279C.530, the Contractor will;

   a) Promptly, as due, make payments to any person, co-partnership, association or corporation, furnishing medical, surgical, and hospital care or other needed care and attention, incidental to sickness or injury, to the employees of such Contractor, of all sums which the Contractor agrees to pay for such services and all monies and sums which the Contractor:

      1. May or shall have deducted from the wages of his employees for such services pursuant to the terms of Oregon Revised Statutes and any contract entered in pursuant thereto; or

      2. Collected or deducted from the wages of his employees pursuant to any law, contract, or agreement for the purpose of providing or paying for such service; and

      3. All employers working under the Contract are either employers that will comply with ORS 656.017 or employers that are exempt under ORS 656.126.

5.) They have not, and will not, discriminate against a Subcontractor in the awarding of a subcontract because the Subcontractor is a minority, women or emerging small business enterprise certified under ORS 200.055 as required by ORS 279A.110.

6.) No Contractor, Subcontractor or any firm, corporation, partnership or association in which the Contractor or Subcontractor has a financial interest who appears on the *List of Contractors Ineligible to Receive Public Works Contracts*, as established by the Bureau of Labor and Industries, will perform work under this Contract, as specified in ORS 279C.860.

7.) No Contractor, Subcontractor or any firm, corporation, partnership or association in which the Contractor or Subcontractor has a financial interest who appears on the Construction Contractor's Board *Not Qualified to Hold Public Contracts* list, will perform work under this Contract, as specified in ORS 701.227(4).

8.) The Contractor shall have a current, valid certificate of registration issued by the Construction Contractor's Board as defined in ORS 701.005(2) and/or a valid landscape contractor's license as defined in ORS 671.520(2) by the State Landscape Contractor's Board, as applicable, in place at the time the bid is presented.

9.) All Subcontractors shall have a current, valid certificate of registration issued by the Construction Contractor's Board as defined in ORS 701.005(2) and/or a valid landscape contractors license as defined in ORS 671.520(2) by the State Landscape Contractor's Board, as applicable in place prior to performing any work under the Contract.

10.) The Contractor shall function as an independent contractor for the purposes of this Contract and shall not be considered an employee of the City of Springfield for any purpose. The Contractor shall assume sole responsibility for any debts or liabilities that may be incurred by the Contractor in fulfilling the terms of this Contract and shall be solely responsible for the payment of all federal, state, and local taxes which may accrue because of this Contract.

Bid Addenda

All Addenda issued are considered to be part of the specifications of the Invitation to Bid and, as such, are as incorporated into the Contract as specified in Section 104.02 of the Standard Construction Specifications.

By signing below, I acknowledge the receipt of the following Addenda documents and certify that the specifications contained in each have been considered and incorporated into the bid as presented. All Addenda must be included with the bid submitted.

Addenda Number	Addenda Date

Declarations

The undersigned Bidder declares that the only persons or parties interested in the bid are those named herein, that this bid is, in all respects, fair and without fraud, that it is made without collusion with any official of the City, and that the bid is made without any connection or collusion with any person submitting another bid on this project.

I have read, fully understand, and agree that as Bidder I, and all Subcontractors, will comply with all of the terms and conditions of the contract for which this bid is presented. By signing below I attest that I am an officer or a duly authorized representative of the business listed below and that I possess the legal authority to submit this bid for consideration.

Bidder's Signature _____

Bidder's Name *(Please Print)* _____

Title _____

Business Name _____

Business Address _____

City _____ State _____ Zip _____

Phone Number _____ Cell Phone _____

E-mail Address _____ Fax Number _____

Date _____

The award of this Contract shall be made to the responsible Bidder with the lowest responsive bid.

PREVAILING WAGE RATE INFORMATION

Prevailing Wage Rates information can be found at the following website:

http://www.oregon.gov/boli/WHD/PWR/Pages/pwr_oregon_2015.aspx

For the proper Prevailing Wage Rates applicable to this project please refer to the following publications:

1.) *Prevailing Wage Rate Publication; Prevailing Wage Rates for Public Works Contracts in Oregon (subject only to state law) and State Apprenticeship Rates with an effective date of January 1, 2015.*

2.) *The following Amendments to the Prevailing Wage Rates for Public Works Contracts in Oregon also apply;*

   a.) *April 1, 2015 PWR Amendments*

CITY OF SPRINGFIELD

Special Provisions

for

P21052
Springfield Mill Race Stormwater Facility, Booth Kelly Trailhead and Mill Race Path

Engineering Concurrence

The Managing Engineer for the City of Springfield concurs with the preparation of the plans and specifications, and further concurs with advertising this project for quotes.

Jeffrey A. Paschall, P.E.

Date 6/5/15

SPECIAL PROVISIONS

SECTION A – General Requirements

P21052 - Springfield Mill Race Stormwater Facility, Booth Kelly Trailhead and Mill Race Path

A1.1 Codes and Standards

All work shall be performed in accordance with the highest standard of practice in the industry and shall be furnished in conformance with all applicable codes, statutes or standards that apply to this work including, but not limited to, any applicable Federal, State or City of Springfield Codes, Standards and Ordinances.

A1.2 Applicable Standard Specifications

Division 100, General Requirements, of the 1994 Edition of the Standard Construction Specifications of the City of Springfield, Oregon, including all revisions at date of Bid opening, and Parts 00200 through 03000 of the 2015 Oregon Standard Specifications for Construction shall apply to this Invitation to Bid and the ensuing construction contract except as may be modified herein. If any section of the 2015 Oregon Standard Specifications for Construction should refer to Section 00100 of the same, the Bidder will instead refer to the equivalent section in Division 100 of the 1994 Edition of the Standard Construction Specifications, including all revisions at date of Bid opening. In the case of discrepancy, unless noted otherwise herein, the provision determined by the City to be more restrictive shall apply.

A1.3 Form of Proposal

REPLACE SECTION 102.02 "FORM OF PROPOSAL" OF THE STANDARD CONSTRUCTION SPECIFICATIONS:

"The Proposal and the proposal guarantee in the form of a bid bond, certified check, or cashier's check, shall be enclosed in a sealed, labeled and addressed envelope, as required in the Instructions to Bidders and filed as required therein. The outside of the envelope shall plainly identify: (1) The project name and (2) The bid opening date.

All Proposals must be clearly and distinctly typed or written with ink or indelible pencil.

All Proposals shall be on the form furnished by Owner, and in addition to necessary unit price items and total prices in the column of totals to make a complete Bid, all applicable blanks giving general information must be filled in and the Bids signed by an officer or duly authorized representative of the Bidder. Any statement accompanying and tending to qualify a Bid may cause rejection of such Bid, unless such statement is required, in a Proposal embracing alternate Bids. All bid documents except plans must be returned with the Bid.

Unless otherwise specified, Bidders shall bid on all Bid items included in the Proposal, and the low Bidder shall be determined as noted in Subsection 103.01 AWARD OF CONTRACT. Except as provided herein Proposals which are incomplete or fail to comply to all items required in the Proposal may be rejected."

INSERT IN ITS PLACE THE FOLLOWING:

"ALL BID DOCUMENTS, EXCEPT PLANS, MUST BE RETURNED WITH THE BID. This includes all documents contained in the original bid book, whether they require the completion of information or not, and any addendum that may be issued pertaining to the bid in question. The only exceptions to this are any plans or drawings, which are not required to be submitted as a part of your Bid.

The Bid Submittal, Bid Bond, Certified Check, or Cashier's Check shall be enclosed in a sealed and labeled envelope. The outside of the envelope shall plainly identify: (1) The project name and project number and (2) The Bid opening date. All Bids must be clearly and distinctly typed or written with ink or indelible pencil. Unless otherwise specified, Bidders shall bid on all Bid items, and must include in their Bid prices the entire cost of each item of work set forth in the Bid.

Sealed Bids shall be addressed to and received at the Office of the Finance Director, City Hall, 225 Fifth St. Springfield, Oregon, 97477 at, or before, the time and date noted on the Invitation to Bidders, after which time the Bids will be publicly opened and read aloud.

All Bids shall be on the form furnished by the City, and in addition to necessary unit price items and total prices in the column of totals to make a complete Bid, all applicable blanks giving general information must be filled in and the Bids signed by an officer or duly authorized representative of the Bidder. The only exceptions to this requirement are the Performance Bond, Payment Bond, Statutory Public Works Bond and the Contract documents which are provided here as a reference. However, if you are awarded the Bid, you will be required to submit fully executed copies of these documents upon request. Any statement accompanying and tending to qualify a Bid may cause rejection of such Bid, unless such statement is required in a Bid embracing alternate Bids.

If, in the opinion of the City, the items or prices in any Bid appear unbalanced, incomplete, or fail to comply with all the terms required, the Bid may be rejected."

A1.4 Proposal Guaranty and Organization

REPLACE SECTION 102.05 "PROPOSAL GUARANTY AND ORGANIZATION" OF THE STANDARD CONSTRUCTION SPECIFICATIONS:

"Each Bid must be accompanied by a Bid Bond, cash or a certified or cashier's check upon a bank in good standing, payable to the Finance Director of the City of Springfield, Oregon, in an amount equal to at least 10% of the total amount of the bid. Such Proposal guaranty shall be forfeited and become the property of the City in case the Bidder shall fail or neglect to furnish a satisfactory Performance Bond and Payment Bond and to execute the Contract within 10 days (Saturday, Sunday and holidays excepted) after receiving said Contract from the City for execution. Bid bonds submitted shall be on the form provided by the City in the Bid document."

INSERT IN ITS PLACE THE FOLLOWING:

"As required by ORS 279C.365(4) each Bid shall be accompanied by a Bid Bond, cash, or a certified or cashier's check written upon a bank in good standing and in a form acceptable to the City, payable to the Finance Director of the City of Springfield, Oregon, in an amount equal to at least 10 percent of the total amount of the Bid. Bid Bonds shall be issued by a surety company registered to issue bonds in the State of Oregon, and utilizing a bond form acceptable to the City. The City will accept AIA Document A310-2010 Bid Bond (sample form enclosed). The Bid Bond may not be altered.

Such Bid Guarantee shall be forfeited and become the property of the City in case the Bidder shall fail or neglect to furnish a satisfactory Performance and/or Payment Bond issued by a viable bond company acceptable to the City as required by ORS 279C.380 and to execute the Contract

within ten (10) days (Saturday, Sunday, and holidays excepted) after receiving Contract from the City for execution. For information regarding Performance and Payment Bond requirements see City of Springfield Contract document, Section 5. City Bonding."

A1.5 Addenda to Contract Documents

REPLACE SECTION 102.08 "ADDENDA TO CONTRACT DOCUMENTS" OF THE STANDARD CONSTRUCTION SPECIFICATIONS:

"Any addenda issued by the Owner, which may include changes, corrections, additions, interpretations, or information, and issued 48 hours or more before the scheduled closing time for filing the Bids, Saturday, Sunday and legal holidays not included, shall be binding upon the Bidder. Owner shall supply copies of such addenda to all Contractors who have obtained copies of the Contract Documents for the purposes of bidding thereon. Failure of the Contractor to receive or obtain such addenda shall not excuse him from compliance therewith, if he is awarded the Contract."

INSERT IN ITS PLACE THE FOLLOWING:

"Any addenda issued by the City, which may include changes, corrections, additions, interpretations, or information issued 72 hours or more before the scheduled closing time for filing the Bids shall be binding upon the Bidder. Addenda will be posted to the City's website at www.springfield-or.gov/DPW/InvitationBid.htm. The Contractor should check the website frequently for new postings during the open quote period. The City shall make a reasonable effort to notify all individuals, firms, and corporations listed on the Plan Holders List and those individuals that attended the Pre-Bid Meeting and provided contact information on the sign-in sheet when addenda are issued. Failure of the Contractor to receive or obtain such addenda shall not excuse them from compliance, if they are awarded the Contract."

A1.6 Surveying

REPLACE SECTION 105.09 "SURVEY SERVICES" OF THE STANDARD CONSTRUCTION SPECIFICATIONS:

The Contractor shall give notice to the Engineer not less than two working days in advance of when survey services will be required in connection with the laying out of any portion of the work.

Engineer will furnish and set construction stakes establishing lines and grades as he determines necessary for all work under the Contract, including lines and grades for street excavation and fill, curbs and gutters, and structures.

Engineer will furnish appropriate offset lines and grades for all projects involving trenching operations. Engineer will not transfer the offset lines or grades into the ditch, to batterboards, or any other point within the work which is provided by the Contractor.

INSERT IN ITS PLACE THE FOLLOWING:

Payment for Surveying as specified will be on a Lump Sum basis and will be full compensation for surveying grades (both subgrade and finish grade). This compensation includes all labor, materials, and incidentals for completing construction. Payment will be made per Section 00330.95 of the Special Provisions-Section B as follows: 50% after initial layout, 50% after completing final grade construction.

A1.7 Insurance

REPLACE SECTION 107.06 "INSURANCE" OF THE STANDARD CONSTRUCTION SPECIFICATIONS:

The Contractor shall provide and maintain general liability, auto liability, property, and workers' compensation insurance for life of this Contract.

General Liability Insurance
The Contractor shall maintain an ISO Commercial General Liability insurance policy (or an equivalent policy approved by Owner) with combined single limits of at least $1,000,000 per occurrence for bodily injury, personal injury, and property damage and an aggregate limit of a least $2,000,000. The policy shall include coverage for contractual liabilities.

Comprehensive Automobile Liability Insurance
The Contractor shall maintain an automobile liability insurance policy with combined single limits of at least $1,000,000 per occurrence for bodily injury, personal injury, and property damage.

Additional Insured Endorsement
The general and automobile insurance policies specified above shall include endorsements naming as an additional insured "the City of Springfield, its agents, employees and officials all while acting within their official capacity as such."

Property Insurance
Depending on the nature of the construction contemplated under this contract, Owner may require Contractor to provide property insurance. Refer to Special Provisions section of this Contract.
Workers' Compensation Insurance
Contractor, its subcontractors, if any, and all employers working under this agreement are subject employers under the Oregon Workers' Compensation Law and shall comply with ORS 656.017, which requires them to provide workers' compensation coverage for all their subject workers.

Contractor is responsible for maintaining workers' compensation insurance for his employees and assuring that his subcontractors, if any, also maintain workers' compensation insurance. Contractor shall defend, indemnify, and hold Owner harmless from any liability for any workers' compensation claims costs, fines, or costs whatsoever arising from Contractor's or his subcontractors' failure to comply with ORS 656.017.

Additional Policies and Special Coverages
Refer to the Special Provisions section of this Contract for additional coverages that may be required.

Certificates of Insurance
Certificates of insurance evidencing all policies required by this Contract shall be delivered to the Owner prior to the commencement of any work. All certificates shall include a 30-day notice of cancellation clause and required additional insured endorsements. The Owner has the right to reject any certificate for unacceptable coverage and/or companies.

INSERT IN ITS PLACE THE FOLLOWING:

"INSURANCE

All insurance shall be approved by the City as to terms, conditions and form prior to beginning work.

Public Liability and Property Damage

The Contractor shall maintain in force for the duration of this Contract a Commercial General Liability insurance policy written on an occurrence basis with limits not less than $2,000,000 per occurrence and $3,000,000 in the aggregate. The policy will be endorsed with a "per project" aggregate endorsement. Automobile Liability (owned, non-owned, and hired) insurance with limits not less than $1,000,000 per occurrence shall be maintained. The City, its employees, officials and agents will be named as Additional Insured's where operations are being conducted related to this Contract on the General and Automobile Liability policies as respects to work or services performed under this agreement to the extent that the death or bodily injury to persons or damage to property arises out of the fault of the Contractor or the fault of the Contractor's agents, representatives or subcontractors. The following statement will appear on the face of the certificate; "The City, its employees, officials and agents are all named as additional insured while acting in their capacity as such." The City's additional insured status for Products and Completed Operations hazards shall extend for at least one year beyond the acceptance of the project. This insurance shall be primary and shall be paid and applied first in its entirety prior to any application of insurance the City may carry on its own.

Workers' Compensation

The Contractor shall provide and maintain Workers' Compensation coverage with limits no less than $500,000 for it employees, officers, agents, or partners, as required by applicable Workers' Compensation laws. If the Contractor is exempt from this coverage a written statement, signed by the Contractor, explaining the reason for the exemption will be provided to the City prior to commencement of any work.

Course of Construction and/or Installation Floater

The Contractor shall maintain in full force for the duration of this contract an All Risk insurance policy approved by the City as to terms, conditions and form covering the replacement cost of the work during the course of construction. The policy shall include the interests of the City and Architect/Engineer, as applicable, and the first two layers of Subcontractors. The amount of insurance shall equal the completed value of the Contract. The City, at its option, may elect to supply this coverage.

Asbestos Abatement (only applicable to Asbestos Specific Contracts)

If applicable to this Contract, the Contractor shall maintain in full force a Commercial General Liability policy approved by the City as to terms, conditions and form that is Asbestos Specific with a minimum limit of $2,000,000 per occurrence and $3,000,000 in the aggregate written on a form that meets the following criteria:

a. A full occurrence form, or
b. A limited occurrence form with at least a three-year (3) tail, or
c. A claims made form with a three-year (3) tail.

Pollution Liability Coverage (only applicable to Pollution Specific Contracts)

If applicable to this Contract, the Contractor shall maintain in full force a Commercial General Liability policy approved by the City as to terms, conditions and form that is Pollution Specific with a minimum limit of $2,000,000 per occurrence and $3,000,000 in the aggregate written on a form that meets the following criteria:

a. A full occurrence form, or
b. A limited occurrence form with at least a three-year (3) tail, or
c. A claims made form with a three-year (3) tail.

Professional Liability Coverage (only applicable to Contracts if specified)

If Professional Liability insurance is required, the City must approve the terms, conditions and limits prior to commencement of any work.

Additional Policies and Special Coverages

Refer to the Special Provisions section of this Contract for additional coverages that may be required.

Railroad Protective Liability Coverage

If work being performed under this Contract is near railroad tracks or a railroad right of way and the Railroad requires special insurance (for example: Railroad Protective Liability Coverage) Contractor will be responsible for meeting the Railroad insurance requirements before any work commences. Any insurance required to be purchased by the Railroad is in addition to the insurance required by the City.

Subcontractors

The Contractor shall require all Subcontractors to provide and maintain General Liability, Auto Liability and Workers' Compensation insurance and, as applicable, Professional, Asbestos and Pollution Liability with coverage's equivalent to those required of the General Contractor in this Contract. The Contractor shall require certificates of insurance from all Subcontractors as evidence of coverage.

Additional Insured Endorsement

All certificates of insurance, with the exception of Professional Liability and Railroad Protective Liability, must include an endorsement which lists the City of Springfield as a named additional insured. The following statement will appear on the face of the certificate; "The City, its employees, officials and agents are all named as additional insured while acting in their capacity as such."

Evidence of Coverage and Notice of Cancellation or Material Change in Coverage

Evidence of the required coverages issued by a company satisfactory of the City shall be provided to the City by way of a certificate of insurance before any work or services commence. A 30-day notice of cancellation or material change in coverage clause shall be included.

If the approved insurance company will not provide this 30 day notice, it shall be the responsibility of the Contractor to provide written notice to the City within two (2) days of the Contractor becoming aware that their coverage has been cancelled or materially changed. The Contractor shall e-mail notification directly to Bob Duey, Finance Director at rduey@springfield-or.gov. Regardless of the circumstances causing the Contractor's insurance coverage to cease or be modified, it is the Contractor's responsibility to notify the City as described above.

Failure to maintain the proper insurance or provide notice of cancellation or material change shall, at the City's option, be grounds for immediate termination of this Contract.

_____
(Contractor initials)

Equipment and Material

The Contractor shall be responsible for any loss, damage, or destruction of its own property, equipment, and materials used in conjunction with the work."

A1.8 Submission of Certified Payroll

REPLACE THE 2ND PARAGRAPH OF SECTION 109.07 OF THE STANDARD CONSTRUCTION SPECIFICATIONS:

Once before the first payment and each time the prevailing wage rates change, and once before final payment is made, Contractor shall supply and file with Owner a statement in writing under oath, in form prescribed by the State Labor Commission and which conforms with ORS Chapter 279, certifying the hourly rate of wages paid each classification of workman not exempt by statute who is employed upon such project and further certifying that no workman employed has been paid less than minimum prevailing wage rate. Each Subcontractor who performed work on the project during the period covered by the payment may be required to file with Owner a similar statement which covers its workmen.

INSERT IN ITS PLACE THE FOLLOWING:

It shall be the responsibility of the Contractor and any subcontractors to submit certified payroll statements to the City as to the wage rates paid to each worker as follows:

As specified in ORS 279C.845, the Contractor or the Contractor's surety and every Subcontractor or the Subcontractor's surety shall file certified statements with the public agency in writing, on a form prescribed by the Commissioner of the Bureau of Labor and Industries, certifying the hourly rate of wage paid each worker whom the Contractor or the Subcontractor has employed upon the public works, and further certifying that no worker employed upon the public works has been paid less than the prevailing rate of wage or less than the minimum hourly rate of wage specified in the Contract. The certificate and certified statement shall be verified by the oath of the Contractor or the Contractor's surety or Subcontractor or the Subcontractor's surety that the Contractor or Subcontractor has read the certified statement and certificate and knows the contents thereof and that the same is true to the Contractor or Subcontractor's knowledge. Certified statements (also referred to as certified payroll reports) shall be submitted to the City no later than the 5th day of the following month for which the certified statement and certificate are being presented, regardless of whether any actual work is performed on the project or not. This information must be submitted to the City and also retained by the Contractor and Subcontractor(s) for three years.

Contracting agencies and general contractors are required to withhold 25% of amounts to Contractors if certified payrolls are not filed by the Contractor as required for work performed on projects subject to the prevailing wage rate law. Failure of Contractors to comply with the certified payroll filing requirements of the law, therefore, will result in a negative fiscal impact to those Contractors of up to 25% of their amount owed.

Each worker employed in the performance of this contract, either by the Contractor or Subcontractor or other person doing or contracting to do or contracting for the whole or any part of the work of the contract, must be paid not less than the specified minimum hourly rate of wage in accordance with ORS 279C.838 and 279C.840.

A1.9 Progress Payment

REPLACE THE 6TH PARAGRAPH OF SECTION 109.07 OF THE STANDARD CONSTRUCTION SPECIFICATIONS:

Progress payment will be made by the Owner on a monthly basis no later than the 20th day of the subsequent month of work performed, except that, additional days may be required when a payment is accompanied by one or more of the following: an extension of completion time, change order or extra bill. Payment may be made via use of checks or warrants at the option of the Owner for the amount of the approved estimate, less retainage.

INSERT IN ITS PLACE THE FOLLOWING:

"Progress payment will be made by the City on a monthly basis in the month subsequent to the work being performed, except that additional days may be required when the Contractor fails to submit complete and accurate certified payroll reports which are in compliance with ORS279C.845 when due, or a payment is accompanied by one or more of the following: an extension of completion time, change order or bill. If the Contractor fails to submit acceptable certified payroll reports when due, or one or more of the previously stated exceptions apply, the progress payment may be made up to fourteen (14) days after the date the certified payroll or other required information in question is received by the City.

The scheduled release of payment will depend upon the method of payment selected by the Contractor. If the Contractor elects to receive payment by check, payment will be released no later than the 20th day of the month. If the Contractor elects to receive payment by electronic Automated Clearing House (ACH) transfer, the funds will be transferred no later than the fourth Friday of the month. City will endeavor to honor Contractor's election to receive payment by ACH transfer, however, City reserves the right to make payment via use of check at the sole discretion of the City."

A1.9 Oregon Products

Contractor's attention is directed to the provisions of Oregon Law, ORS 279A.120 regarding the preference for products that have been manufactured or produced in Oregon. Contractor shall use Oregon-produced or manufactured materials with respect to common building materials such as cement, sand, crushed rock, gravel, plaster, etc., and Oregon-manufactured products in all cases where price, fitness, availability and quality are otherwise equal.

A1.10 Salvage and Debris

Unless otherwise indicated on the drawings or in the specifications, all castings, pipe, equipment, demolition debris, fences, trees, shrubs, spoil or any other discarded material or equipment shall become the property of the Contractor and shall be salvaged or disposed of in a manner compliant with applicable Federal, State and local laws and regulations governing disposal of such waste products. No burning of debris or any other discarded material will be permitted. The Contractor shall perform any demolition for the completion of this project and shall salvage and recycle all construction and demolition debris as is feasible and cost effective, in accordance with ORS 279C.510.

A1.11 Brand Name or Equal Specification

Brand Name or Equal Specification means a specification that uses one or more manufacturers' names, makes, catalog numbers or similar identifying characteristics to describe the standard of quality, performance, functionality or other characteristics needed to meet the contracting agency's requirements. The "Equal" product, component or process shall be the same or better

than that named in function, performance, reliability, quality and general configuration. Determination of equal in reference to the project design requirements will be made by the Engineer, pursuant to Subsection 106.07. Unless otherwise specified, whenever a manufacturer's name brand or model is mentioned, it is to be understood that the phrase "approved equal" is assumed to follow thereafter, whether it does in fact or not. Such specification authorizes Contractors to offer goods or services that are equivalent or superior to those brands named or described in the specification.

END OF SECTION

TABLE OF CONTENTS FOR SPECIAL PROVISIONS – Section B

SECTION 00225 – WORK ZONE TRAFFIC CONTROL 6

SECTION 00280 - EROSION AND SEDIMENT CONTROL 7

SECTION 00290 - ENVIRONMENTAL PROTECTION 8

SECTION 00310 – REMOVAL OF STRUCTURES AND OBSTRUCTIONS 12

SECTION 00320 - CLEARING AND GRUBBING 13

SECTION 00330 - EARTHWORK 14

SECTION 00350 - GEOSYNTHETIC INSTALLATION 15

SECTION 00390 – RIPRAP PROTECTION 16

SECTION 00405 – TRENCH EXCAVATION, BEDDING, AND BACKFILL 17

SECTION 00445 - SANITARY, STORM, CULVERT, SIPHON, AND IRRIGATION PIPE 18

SECTION 00470 – MANHOLES, CATCH BASINS, AND INLETS 19

SECTION 00511 - MODULAR CONCRETE RETAINING WALL 20

SECTION 00540 – STRUCTURAL CONCRETE 29

SECTION 00551 – PRECAST CONSPAN BRIDGE 30

SECTION 00593 - POWDER COATING METAL STRUCTURES 31

SECTION 00641 - AGGREGATE SUBBASE, BASE, AND SHOULDERS 32

SECTION 00730 - EMULSIFIED ASPHALT TACK COAT 33

SECTION 00745 - ASPHALT CONCRETE PAVEMENT - STATISTICAL ACCEPTANCE 34

SECTION 00756 – PLAIN CONCRETE PAVEMENT 48

SECTION 00760 – GRASS PAVERS 49

SECTION 00815 - BOLLARDS 52

SECTION 00860 - LONGITUDINAL PAVEMENT MARKINGS - PAINT 53

SECTION 00940 – SIGNS 54

SECTION 00960 - COMMON PROVISIONS FOR ELECTRICAL SYSTEMS 55

SECTION 00962 - METAL ILLUMINATION AND TRAFFIC SIGNAL SUPPORTS 56

SECTION 00970 - HIGHWAY ILLUMINATION 57

SECTION 01030 - SEEDING 58

SECTION 01040 - PLANTING.....60

SECTION 01095 - SITE FURNISHINGS 63

SECTION 01140 – POTABLE WATER PIPE AND FITTINGS.....67

SECTION 02926 - HIGHWAY ILLUMINATION MATERIALS 68

SPECIAL PROVISIONS

SECTION B – Scope of Work

P21052 – Springfield Mill Race Stormwater Facility, Booth Kelly Trailhead and Mill Race Path

B1. GENERAL

B 1.1 Codes and Standards

All work shall be performed in accordance with the highest standard of practice in the industry and shall be furnished in conformance with all applicable codes, statutes or standards that apply to this work including, but not limited to, any applicable Federal, State or City of Springfield Codes, Standards and Ordinances.

B 1.2 Project Description – Work to be Done

This project is for the Springfield Mill Race Stormwater Facility, Booth Kelly Trailhead, and Mill Race Path, in the City of Springfield, Lane County, OR including, but not limited to, the following and any and all other work as needed to complete a fully functional project.

1. Implement temporary traffic control and temporary erosion control measures.
2. Demolition
3. Perform earthwork and disposal.
4. Remove contaminated soil identified in the CMMP and dispose at appropriate landfill, and adhere to the CMMP.
5. Construct stormwater facility; wet detention pond, swale, and concrete structures.
6. Construct crushed aggregate access road, and asphalt concrete path.
7. Construct bridge and keystone wall.
8. Construct trailhead, including asphalt concrete parking lot, and concrete plaza
9. Install prefabricated concrete restroom
10. Construct and install utilities; sanitary sewer, potable water, irrigation, electrical, communications, security cameras, illumination, rain garden, stormwater, and electrical conduit for future path lighting
11. Install trailhead amenities; kiosk, benches, picnic tables, and other site furnishings.
12. Install pavement markings.
13. Install permanent signs.
14. Install boulder bollards.
15. Perform permanent seeding, planting, erosion control, and grass pavers.
16. Construct chain-link fences and gates.
17. Perform additional and incidental Work as called for by the Specifications and Plans.

All number references in these Special Provisions shall be understood to refer to the Sections and subsections of the 2015 Oregon Standard Specifications for Construction and Supplemental

Specifications bearing like numbers and to Sections and subsections contained in these Special Provisions in their entirety.

B 1.3 Utility Information

There are no anticipated conflicts with the Utilities listed below. Contact those Utilities and request that they locate and mark them for their protection prior to construction.

	Utility	Contact Person's Name and Phone Number
1.	**Springfield Utility Board (Electric)**	Sanjeev King 1001 Main Street Springfield, OR 97477 541-736-2331 sanjeevk@subutil.com
2.	**Springfield Utility Board (Water)**	Bart Mckee Water Service Center 202 South 18th Street Springfield, OR 97477 541-726-2396 bartm@subutil.com

The following organization may be adjusting Utilities within the limits of the Project during the period of the Contract with relocation Work estimated to be completed by the following times:

	Utility	Estimated Completion Time
1.	**Comcast** Tom Henerty 2897 Chad Drive Eugene, OR 97408 541-228-1884 Tom_henerty@cable.comcast.com	Comcast will install overhead communication lines within 14 days of notice from the Contractor.

Notify, in writing, Comcast at least 14 Calendar Days before beginning communications work. Allow Comcast 14 Calendar Days to complete overhead communications work.

This Project is located within the Oregon Utility Notification Center area which is a Utilities notification system for notifying owners of Utilities about Work being performed in the vicinity of their facilities. The Utilities notification system telephone number is 811 (or use the old number which is 1-800-332-2344).

B 1.4 Cooperation with Other Contractors

The following contract work will be ongoing within the Project site during the following times:

	Contract Name (Contractor's Name)	Estimated Times (From - To)
1.	**Springfield Utility Board (SUB)** Ladd Boyce 541-501-0749	New 24" Waterline: A) Eastside Transmission Phase 2: June 1 – October 31, 2015 (up to the North West Swanson Gate from S. F Street) B) Eastside Transmission Phase 3: February 1 – June 30, 2016 (Back of Swanson Gate to Steam Plant)

SECTION 00225 – WORK ZONE TRAFFIC CONTROL

Comply with Section 00225 of the Standard Specifications modified as follows:

00225.90 Payment (b) Method "B"

Payment for Temporary Work Zone Traffic Control will be in accordance with the Standard Specifications.

In addition, add the following paragraph:

Payment will include: preparation of the Temporary Work Zone Traffic Control Plan, submittal to the City of Springfield, and making revisions to the plan as directed by the Engineer.

SECTION 00280 - EROSION AND SEDIMENT CONTROL

Comply with Section 00280 of the Standard Specifications modified as follows:

Add the following subsection:

00280.45(g) Compost Berm - Install compost berms in a one-step process using pneumatic or mechanical spreaders. Ensure contact with the ground surface along the entire length of the berm. Compact and shape the compost berms into uniform trapezoids with the berm base twice its height or as shown.

00280.90 Payment - Add the following or replace the pay items to the pay item list:

Pay Item	Unit of Measurement
(a) Construction Entrance/Tire Wash Facility/Concrete Washout	LS
(b) Compost Filter Berm	LF
(c) Staked Turbidity Barrier	LF
(d) Wattles	LF

SECTION 00290 - ENVIRONMENTAL PROTECTION

Comply with Section 00290 of the Standard Specifications modified as follows:

00290.30(a) Pollution Control Measures - Add the following subsections and bullets:

(7) Water Quality:

- Do not discharge contaminated or sediment-laden water, including drilling fluids and waste, or water contained within a work area isolation, directly into any storm system or waters of the State or U.S. It is against City Code 4.372 for anyone to discharge non-rain water into the City storm system as well, not just waters of the State. Any discharge would be a violation of City Code and subject to a fine.
- Do not cause turbidity in waters of the State or U.S. greater than 10% above background reading (up to 100 feet upstream of the Project), as measured 100 feet downstream of the Project.
- During construction, monitor in-stream turbidity and inspect all erosion controls daily during the rainy season and weekly during the dry season, or more often as necessary, to ensure the erosion controls are working adequately meeting treatment requirements.
- If construction discharge water is released using an outfall or diffuser port, do not exceed velocities more than 4 feet per second, and do not exceed an aperture size of 1 inch.
- If monitoring or inspection shows that the erosion and sediment controls are ineffective, mobilize work crews immediately to make repairs, install replacements, or install additional controls as necessary.
- Implement containment measures adequate to prevent pollutants or construction and demolition materials, such as waste spoils, fuel or petroleum products, concrete cured less than 24 hours, concrete cure water, silt, welding slag and grindings, concrete saw cutting by-products and sandblasting abrasives, from entering waters of the state or U.S.
- Cease project operations under high flow conditions that may result in inundation of the project area, except for efforts to avoid or minimize resource damage.
- The Project Manager retains the authority to temporarily halt or modify the Project in case of excessive turbidity or damage to natural resources.

(8) Visual Turbidity Monitoring - Perform visual turbidity monitoring each day when working in regulated work areas according to the following:

- Before beginning work, make in stream turbidity observation approximately 100 feet upstream and, based on the wetted stream width, at the compliance distance listed in Table 00290-1 downstream of the in-water work area.
- Make in stream turbidity observations upstream and downstream every four hours.
- If a turbidity plume is observed within the compliance distance downstream of the in-water work area, implement in-water best management practices (BMP). If a turbidity plume is still observed at the second four hour observation, stop all in-water work and implement additional BMP. Resume in-water work activity the next morning.
- If a turbidity plume is observed beyond the compliance distance downstream of the in-water work area at any observation interval, stop all in-water work and implement additional BMP. Resume in-water work activity the next morning.

Table 00290-1

Wetted Stream Width	Compliance Distance
≤ 30 feet	50 feet
> 30 feet to 100 feet	100 feet
> 100 feet to 200 feet	200 feet
> 200 feet	300 feet
Lakes, Ponds, and Reservoirs	Lesser of 100 feet or max. surface dimension

00290.34 Protection of Fish and Fish Habitat - Add the following paragraph:

Meet with the City Project Manager, and Engineer on site, before moving equipment on-site or beginning any work, to ensure that all parties understand the locations of sensitive biological sites and the measures that are required to be taken to protect them.

00290.34(a) Regulated Work Areas - Add the following to the end of this subsection:

The Regulated Work Area is the area within the ordinary high water (OHW) elevation that is shown on the plans.

The Contractor will flag the boundaries of the Regulated Work Area, the Contractor will be responsible for maintenance of flagging.

Perform work within the Regulated Work Area only during the in-water work period. The in-water work period is from **June 1** to **October 31**.

Submit a schedule to complete all work within the Regulated Work Area within the in-water work period at least 10 days prior to the preconstruction conference.

00290.34(b) Prohibited Operations - Add the following bullets to the end of this subsection:

- Allow equipment to enter or work in or on the water.

Add the following subsection:

00290.34(c) Fish Protection Measures Required by Environmental Permits:

(1) General Equipment Requirements - Use heavy equipment as follows:

- Choice of equipment must have the least adverse effects on the environment (for example: minimally sized, low ground pressure).
- Before operations begin and as often as necessary during operation, steam clean all equipment that will be used below the regulated work area until all visible oil, grease, mud, and other visible contaminants are removed. Complete all cleaning in approved staging areas.
- Secure absorbent material around all stationary power equipment (for example: generators, cranes, drilling equipment) operated within 150 feet of wetlands, waters of the State and U. S.,

drainage ditches, or water quality facilities to prevent leaks, unless suitable containment is provided to prevent spills from entering waters of the state and U.S.

- Do not cross directly through a stream for construction access, unless shown or approved.
- The volume of material filled or discharged into waters of the state or U.S. plus the volume excavated shall not exceed 157 cubic yards.
- Do not apply surface fertilizer within 50 feet of any stream channel.

(2) Site Restoration - Restore damaged streambanks to a natural slope, pattern, and profile suitable for establishment of permanent native woody vegetation unless precluded by pre-project conditions (for example: natural rock substrate):

- Replant all damaged streambanks before the first April 15 following construction.
- Stabilize all disturbed soils, including obliteration of temporary access roads, following any break in work unless construction will resume in 4 Calendar Days.

00290.38 Protection of Plants – Add the following:

Clean all construction equipment prior to entry into construction sites.

Do not move soil contaminated with noxious weed seeds and vegetative parts to other areas within the Project area. Keep contaminated soil within the same area it was removed from or move the soil offsite to an appropriate disposal facility.

Reseed and replant all areas of ground disturbance with native vegetation as soon after the disturbance as practicable.

00290.41(b) Disturbing Wetlands - Add the following to the end of this subsection:

Permits have been obtained for this project from the US Army Corps of Engineers (Corps) and the Department of State Lands (DSL). Keep a copy of Corps and DSL permits at the project site during construction. These permits authorize the placement of up to 25 cubic yards of fill and removal of up to 61 cubic yards of material in wetlands, as described in the permit.

00290.51 Protection of Sensitive Cultural Sites - Add the following to the end of this subsection:

The following recommendations are advised based on the proposed construction activities. Amec Foster Wheeler finds **No Historic Properties Affected** by the proposed construction of the Millrace Stormwater Facility and Trailhead due to previous impacts to the former Booth-Kelly Millpond by subsequent land use practices that included a lumber mill and by 1977, a lumber yard. The entire Area of Potential effects, including the majority of land surrounding the APE has been heavily modified over the course of the last 60 years. Based on this fact, construction activities involved with the current undertaking will occur in areas that maintain a low to moderate probability for unknown and significant cultural resources. To ensure that no significant buried cultural materials are disturbed during construction of the Millrace Stormwater Facility, an Archaeological Monitoring Plan must be drafted prior to any ground disturbance and employed during construction activities with an on-site qualified archaeologist.

If cultural resources are discovered during construction excavation, all construction activity in the immediate area must stop so that a qualified archaeologist can accurately assess the context and integrity of the find. If significant cultural resources were discovered (for example,

human skeletal remains), the Contractor should immediately contact the Lane County Sheriff's Office and Medical Examiner, the Oregon SHPO, USACE, and the affected Native American tribe(s), if the remains are determined to be Native American.

Notify the Archaeological Monitor, through the Project Manager, at least 10 days prior to performing ground disturbing activities

00290.90 Payment - Add the following to the end of this subsection:

1) Archaeological monitoring plan

No separate or additional payment will be made for the archaeological monitoring plan.

2) Temporary Control and Diversion of Water

The Contractor will not commence construction operations without an Engineer approved plan for the temporary control and diversion of water. The plan will indicate measures the Contractor will take to protect the work site and downstream areas from damage from existing flows or in the event of rainfall on the existing stormwater conveyance system and Mill Race watershed. At a minimum the plan will be typewritten and will address: the weather forecasting alert service to be used, rainfall depth at which control and diversion measures will be initiated, including existing flows, and location of control and diversion measures, and specific measures utilized for protecting existing work, and equipment and materials stored at the site.

Payment for this item shall be lump sum and includes preparing the plan, obtaining Engineer approval, and implementing the plan.

3) Transportation and Disposal

Payment for this item shall be Cubic Yards (loose). This is "clean fill" as identified in the project specific Contaminated Media Management Plan (CMMP). Soil Disposal location must be off of City owned property.

4) Contaminated Media Disposal

Payment for this item shall be Tons. Contractor is required to identify the appropriate disposal facility/landfill as identified in the CMMP, and submit all required paperwork.

SECTION 00310 – REMOVAL OF STRUCTURES AND OBSTRUCTIONS

Comply with Section 00310 of the Standard Specifications modified as follows:

Add the following subsection:

00310.41(f) Fence Removal and Relocation – Remove and Re-Install fence, posts, and gate as shown on drawings.

00310.91 Lump Sum Basis - Add the following pay items to the pay item list:

Pay Item	**Unit of Measurement**
(c) Fence Removal and Relocation	LS

SECTION 00320 - CLEARING AND GRUBBING

Comply with Section 00320 of the Standard Specifications modified as follows:

00320.40 Clearing Operations – Modify this subsection as follows:

(a) Clearing Trees and Other Vegetation –Replace the paragraph that begins "Cut trees and brush..." with the following paragraph:

Remove all the cut trees and cut brush, including but not limited to limbs and trimmings, in the areas specified to be cleared.

00320.90 Payment

Payment for this item shall be lump sum and includes the various items of work as shown and specified, including tree protection, and removal.

SECTION 00330 - EARTHWORK

Comply with Section 00330 of the Standard Specifications modified as follows:

00330.03 Basis of Performance - Add the following paragraph to the end of this subsection:

Perform all earthwork under this Section.

00330.41(a-5) Waste Materials - Replace this subsection, except for the subsection number and title, with the following:

Unless otherwise specifically allowed and subject to the requirements of 00280.05, dispose of materials, classed as waste materials in 00330.41(a-3) and 00330.41(a-4), outside and beyond the limits of construction and City controlled property according to 00290.20 and the project specific Contaminated Media Management Plan (CMMP). Do not dispose of materials on wetlands, either public or private, or within 300 feet of rivers or streams.

00330.93 Excavation Basis Payment – Replace the following pay items in the pay item list with the following:

Pay Item	**Unit of Measurement**
(d) General Excavation	BCY

00330.95 Payment for Surveying as Specified – Add this subsection

Payment for Surveying as Specified will be on a lump sum basis and will be full compensation for surveying grades (both subgrade and finish grade). This compensation includes all labor, materials, and incidentals for completing construction.

Payment will be made as follows: 50% after initial layout, 50% after completing final grade construction.

SECTION 00350 - GEOSYNTHETIC INSTALLATION

Comply with Section 00350 of the Standard Specifications modified as follows:

00350.10 Materials - Add the following to the end of this subsection:

Provide manufacturer's certifications complying with 02320.10(c) for the following geosynthetics:

Geotextile	Certification Level B
Riprap, Type 2	X
Subgrade	X

00350.90 Payment – Delete this subsection and replace with the following paragraph:

No separate or additional payment will be made for geosynthetic installation.

SECTION 00390 – RIPRAP PROTECTION

Comply with Section 00390 of the Standard Specifications modified as follows:

00390.44(e) Riprap Basins – Delete this subsection and replace with the following paragraph:

Excavate, backfill and construct rip rap basins in accordance with the project drawings and details.

00390.90 Payment – Replace the following pay items in the pay item list with the following:

Pay Item	Unit of Measurement
(f) Riprap Basins	LS

SECTION 00405 – TRENCH EXCAVATION, BEDDING, AND BACKFILL

Comply with Section 00405 of the Standard Specifications modified as follows:

00405.43 Dewatering - Add the following paragraph to the end of this subsection:

Contractor shall submit a dewatering plan for Engineer approval prior to start of construction.

00405.90 Payment – Add the following pay items in the pay item list:

Pay Item	Unit of Measurement
(d) Dewatering	LS

SECTION 00445 - SANITARY, STORM, CULVERT, SIPHON, AND IRRIGATION PIPE

Comply with Section 00445 of the Standard Specifications modified as follows:

00445.80(a) Pipes - In the length bullet, add ", to the nearest foot" after the word "applicable".

SECTION 00470 – MANHOLES, CATCH BASINS, AND INLETS

Comply with Section 00470 of the Standard Specifications modified as follows:

00470.90 Payment – Add the following pay items in the pay item list:

Pay Item	Unit of Measurement
(I) Stormwater Facility Control Structures	LS

SECTION 00511 - MODULAR CONCRETE RETAINING WALL

Section 00511, which is not a Standard Specification, is included in this Project by Special Provision.

Description

00511.00 Scope

A. Work shall consist of furnishing and construction of a KEYSTONE Standard Unit Retaining Wall System or equal in accordance with these specifications and in reasonably close conformity with the lines, grades, design, and dimensions shown on the plans.

B. Work includes preparing foundation soil, furnishing and installing leveling pad, unit drainage fill and backfill to the lines and grades shown on the construction drawings.

C. Work includes furnishing and installing geogrid soil reinforcement of the type, size, location, and lengths designated on the construction drawings.

00511.08 Submittals/Certification

A. Contractor shall submit a Manufacturer's certification, prior to start of work, that the retaining wall system components meet the requirements of this specification and the structure design.

B. Contractor shall submit construction drawings and design calculations for the retaining wall system prepared and stamped by a Professional Engineer registered in the state of the project. The engineering designs, techniques, and material evaluations shall be in accordance with the Manufacturer's Design Manual, NCMA Design Guidelines For Segmental Retaining Walls, or the AASHTO Standard Specifications for Highway Bridges (whichever is applicable to designer).

C. Contractor shall submit a test report documenting strength of specific modular concrete unit and geogrid reinforcement connection. The maximum design tensile load of the geogrid shall be equal to the laboratory tested ultimate strength of geogrid / facing unit connection at a maximum normal force limited by the "Hinge Height" of the structure divided by a safety factor of 1.5. The connection strength evaluation shall be performed in accordance with ASTM D6638 (NCMA SRWU-1).

00511.09 Quality Assurance

A. Contractor shall submit certification, prior to start of work, that the retaining wall system (modular concrete units and specific geogrid):

1) Has been successfully utilized on a minimum of five (5) similar projects, i.e., height, soil fill types, erection tolerances, etc.; and

B. Contractor shall submit a list of five (5) previously constructed projects of similar size and magnitude by the wall installer where the specific retaining wall system has been constructed successfully. Contact names and telephone numbers shall be listed for each project.

C. Contractor shall provide evidence that the design Engineer has a minimum of five years of documentable experience in the design for reinforced soil structures.

D. Owner shall/may provide soil testing and quality assurance inspection during earthwork and wall construction operations. Contractor shall provide any quality control testing or inspection not provided by the Owner. Owner's quality assurance program does not relieve the Contractor of responsibility for quality control and wall performance.

E. Contractor shall check all materials upon delivery to assure that the proper type, grade, color, and certification has been received.

F. Contractor shall protect all materials from damage due to jobsite conditions and in accordance with manufacturer's recommendations. Damaged materials shall not be incorporated into the work.

Materials

00511.10 Definitions

A. Modular Unit - a concrete retaining wall element machine made from Portland cement, water, and aggregates.

B. Structural Geogrid - a structural element formed by a regular network of integrally connected tensile elements with apertures of sufficient size to allow interlocking with surrounding soil, rock, or earth and function primarily as reinforcement.

C. Unit Drainage Fill - drainage aggregate, which is placed within and immediately behind the modular concrete units.

D. Reinforced Backfill - compacted soil, which is placed within the reinforced soil volume as outlined on the plans.

00511.10(a) Modular Concrete Retaining Wall Units

A. Modular concrete units shall conform to the following architectural requirements:

1. Face color - concrete gray, unless otherwise specified. The Owner may specify standard manufacturers' color.
2. Face finish - sculptured rock face in angular tri-planer configuration. Other face finishes will not be allowed without written approval of Owner.
3. Bond configuration - running with bonds nominally located at midpoint vertically adjacent units, in both straight and curved alignments.
4. Exposed surfaces of units shall be free of chips, cracks or other imperfections when viewed from a distance of 10 feet under diffused lighting.

B. Modular concrete materials shall conform to the requirements of ASTM C1372 - Standard Specifications for Segmental Retaining Wall Units.

C. Modular concrete units shall conform to the following structural and geometric requirements measured in accordance with ASTM C140 Sampling and Testing Concrete Masonry Units:

1. Compressive strength: ≥ 3000 psi (21 MPa);
2. Absorption: 8 % (6% in northern states) for standard weight aggregates;
3. Dimensional tolerances: ± 1/8" (3 mm) from nominal unit dimensions not including rough split face, ±1/16" (1.5 mm) unit height - top and bottom planes;
4. Unit size: 8" (203 mm) (H) x 18" (457 mm)(W) x 18" (457 mm)(D) minimum;
5. Unit weight: 100 lbs/unit (45 kg) minimum for standard weight aggregates.

D. Modular concrete units shall conform to the following performance testing:

1. Inter -unit shear strength in accordance with ASTM D6916 (NCMA SRWU-2): 1500 plf (21 kN/m) minimum at 2 psi (13 MPa) normal pressure;
2. Geogrid/unit peak connection strength in accordance with ASTM D6638 (NCMA SRWU-1): 900 plf (13 kN/m) minimum at 2-psi (13 MPa) normal force.

E. Modular concrete units shall conform to the following constructability requirements:

1. Vertical setback: 1/32" (0.8 mm), near vertical
2. Alignment and grid positioning mechanism - fiberglass pins, two per unit minimum;

3. Maximum horizontal gap between erected units shall be ≤ 1/2 inch (13 mm).

00511.10(b) Shear Connectors

A. Shear connectors shall be 1/2-inch (12 mm) diameter thermoset isopthalic polyester resin-pultruded fiberglass reinforcement rods or equivalent to provide connection between vertically and horizontally adjacent units with the following requirements:

1. Flexural Strength in accordance with ASTM D4476: 128,000 psi (882 MPa) minimum;
2. Short Beam Shear in accordance with ASTM D4475: 6,400 psi (44 MPa) minimum.

B. Shear connectors shall be capable of holding the geogrid in the proper design position during grid pre-tensioning and backfilling.

00511.10(c) Base Leveling Pad Material

A. Material shall consist of a compacted crushed stone base or non-reinforced concrete as shown on the construction drawings.

00511.10(d) Unit Drainage Fill

A. Unit drainage fill shall consist of clean 1” (25 mm) minus crushed stone or crushed gravel meeting the following gradation tested in accordance with ASTM D-422:

Sieve Size	Percent Passing
1 inch (25 mm)	100
3/4-inch (19 mm)	75-100
No. 4	0 - 10
No. 50	0 - 5

B. One cubic foot (0.028 m3), minimum, of drainage fill shall be used for each square foot (0.093 m2) of wall face. Drainage fill shall be placed within cores of, between, and behind units to meet this requirement.

00511.10(e) Reinforced Backfill

A. Reinforced backfill shall be free of debris and meet the following gradation tested in accordance with ASTM D-422:

Sieve Size	Percent Passing
2-inch (50 mm)	100

3/4-inch (19 mm)	100-75
No. 40	0-60
No. 200	0-35

Plasticity Index (PI) <15 and Liquid Limit <40 per ASTM D-4318.

B. The maximum aggregate size shall be limited to 3/4 inch (19 mm) unless field tests have been performed to evaluate potential strength reductions to the geogrid design due to damage during construction.

C. Material can be site-excavated soils where the above requirements can be met. Unsuitable soils for backfill (high plastic clays or organic soils) shall not be used in the backfill or in the reinforced soil mass.

D. Contractor shall submit reinforced fill sample and laboratory test results to the Architect/Engineer for approval prior to the use of any proposed reinforced fill material.

00511.10(f) Geogrid Soil Reinforcement

A. Geosynthetic reinforcement shall consist of geogrids manufactured specifically for soil reinforcement applications and shall be manufactured from high tenacity polyester yarn or high-density polyethylene. Polyester geogrid shall be knitted from high tenacity polyester filament yarn with a molecular weight exceeding 25,000 Meg/m and a carboxyl end group values less than 30. Polyester geogrid shall be coated with an impregnated PVC coating that resists peeling, cracking, and stripping.

B. Ta, Long Term Allowable Tensile Design Load, of the geogrid material shall be determined as follows:

Ta = Tult / (RFcr*RFd*RFid*FS)
Ta shall be evaluated based on a 75-year design life.

1. Tult, Short Term Ultimate Tensile Strength shall be determined in accordance with ASTM D4595 or ASTM D6637.
   Tult is based on the minimum average roll values (MARV).

2. RFcr, Reduction Factor for Long Term Tension Creep
   RFcr shall be determined from 10,000-hour creep testing performed in accordance with ASTM D5262. Reduction value = 1.45 minimum.

3. RFd, Reduction Factor for Durability
   RFd shall be determined from polymer specific durability testing covering the range of expected soil environments. RFd = 1.10 minimum.

4. RFid, Reduction Factor for Installation Damage

RFid shall be determined from product specific construction damage testing performed in accordance with ASTM D5818 (GRI-GG4). Test results shall be provided for each product to be used with project specific or more severe soil type. RFid = 1.05 minimum.

5. FS, Overall Design Factor of Safety
FS shall be 1.5 unless otherwise noted for the maximum allowable working stress calculation.

C. The maximum design tensile load of the geogrid shall not exceed the laboratory tested ultimate strength of the geogrid/facing unit connection as limited by the "Hinge Height" divided by a factor of safety of 1.5. The connection strength testing and computation procedures shall be in accordance with ASTM D6638 Connection Strength between Geosynthetic Reinforcement and Segmental Concrete Units (NCMA SRWU-1).

D. Soil Interaction Coefficient, Ci
Ci values shall be determined per ASTM D6706 (GRI:GG5) at a maximum 0.75-inch (19 mm) displacement.

E. Manufacturing Quality Control
The geogrid manufacturer shall have a manufacturing quality control program that includes QC testing by an independent laboratory.
The QC testing shall include:
Tensile Strength Testing
Melt Flow Index (HDPE)
Molecular Weight (Polyester)

00511.10(g) Drainage Pipe

A. If required, the drainage pipe shall be perforated or slotted PVC pipe manufactured in accordance with ASTM D-3034 or corrugated HDPE pipe manufactured in accordance with AASHTO M252.

00511.10(h)Geotextile Filter Fabric

A. When required, Geotextile filter fabric shall be 4.0 oz/sy, polypropylene, needlepunched nonwoven fabric.

Construction

00511.40 General

00511.40(a) Excavation

A. Contractor shall excavate to the lines and grades shown on the construction drawings. Owner's representative shall inspect the excavation and approve prior to placement of leveling material or fill soils. Proof roll foundation area as directed to determine if remedial work is required.

B. Over-excavation and replacement of unsuitable foundation soils and replacement with approved compacted fill will be compensated as agreed upon with the Owner.

00511.40(b) Base Leveling Pad

A. Leveling pad material shall be placed to the lines and grades shown on the construction drawings, to a minimum thickness of 6 inches (150 mm) and extend laterally a minimum of 6" (150 mm) in front and behind the modular wall unit.

B. Soil leveling pad materials shall be compacted to a minimum of 95 % Standard Proctor density per ASTM D-698 or 92% Modified Proctor Density per ASTM D1557.

C. Leveling pad shall be prepared to insure full contact to the base surface of the concrete units.

00511.40(c) Modular Unit Installation

A. First course of units shall be placed on the leveling pad at the appropriate line and grade. Alignment and level shall be checked in all directions and insure that all units are in full contact with the base and properly seated.

B. Place the front of units side-by-side. Do not leave gaps between adjacent units. Layout of corners and curves shall be in accordance with manufacturer's recommendations.

C. Install shear/connecting devices per manufacturer's recommendations.

D. Place and compact drainage fill within and behind wall units. Place and compact backfill soil behind drainage fill. Follow wall erection and drainage fill closely with structure backfill.

E. Maximum stacked vertical height of wall units, prior to unit drainage fill and backfill placement and compaction, shall not exceed two courses.

00511.40(d) Structural Geogrid Installation

A. Geogrid shall be oriented with the highest strength axis perpendicular to the wall alignment.

B. Geogrid reinforcement shall be placed at the strengths, lengths, and elevations shown on the construction design drawings or as directed by the Engineer.

C. The geogrid shall be laid horizontally on compacted backfill and attached to the modular wall units. Place the next course of modular concrete units over the geogrid. The geogrid shall be pulled taut, and anchored prior to backfill placement on the geogrid.

D. Geogrid reinforcements shall be continuous throughout their embedment lengths and placed side-by-side to provide 100% coverage at each level. Spliced connections between shorter pieces of geogrid or gaps between adjacent pieces of geogrid are not permitted.

00511.40(e) Reinforced Backfill Placement

A. Reinforced backfill shall be placed, spread, and compacted in such a manner that minimizes the development of slack in the geogrid and installation damage.

B. Reinforced backfill shall be placed and compacted in lifts not to exceed 6 inches (150 mm) where hand compaction is used, or 8 - 10 inches (200 to 250 mm) where heavy compaction equipment is used. Lift thickness shall be decreased to achieve the required density as required.

C. Reinforced backfill shall be compacted to a minimum of 95 % Standard Proctor density per ASTM D-698 or 92% Modified Proctor Density per ASTM D1557. The moisture content of the backfill material prior to and during compaction shall be uniformly distributed throughout each layer and shall be dry of optimum, + 0%, - 3%.

D. Only lightweight hand-operated equipment shall be allowed within 3 feet (1m) from the tail of the modular concrete unit.

E. Tracked construction equipment shall not be operated directly upon the geogrid reinforcement. A minimum fill thickness of 6 inches (150 mm) is required prior to operation of tracked vehicles over the geogrid. Tracked vehicle turning should be kept to a minimum to prevent tracks from displacing the fill and damaging the geogrid.

F. Rubber tired equipment may pass over geogrid reinforcement at slow speeds, less than 10 MPH (15 KPH). Sudden braking and sharp turning shall be avoided.

G. At the end of each day's operation, the Contractor shall slope the last lift of reinforced backfill away from the wall units to direct runoff away from wall face. The Contractor shall not allow surface runoff from adjacent areas to enter the wall construction site.

00511.40(f) Cap Installation

A. Cap units shall be glued to underlying units with an all-weather adhesive recommended by the manufacturer.

00511.40(g) As-built Construction Tolerances

A. Vertical alignment: ± 1.5" (40 mm) over any 10' (3 m) distance.

B. Wall Batter: within 2 degrees of design batter.

C. Horizontal alignment: ± 1.5" (40 mm) over any 10' (3 m) distance.
Corners, bends & curves: ± 1 ft (300 mm) to theoretical location.

D. Maximum horizontal gap between erected units shall be ≤ 1/2 inch (13 mm).

00511.40(h)Field Quality Control

A. Quality Assurance - The Owner shall/may engage inspection and testing services, including independent laboratories, to provide quality assurance and testing services during construction. This does not relieve the Contractor from securing the necessary construction control testing.

B. Quality assurance should include foundation soil inspection. Verification of geotechnical design parameters, and verification that the Contractor's quality control testing is adequate as a minimum. Quality assurance shall also include observation of construction for general compliance with design drawings and project specifications. Quality assurance is best performed by the site geotechnical engineer.

C. Quality Control – The Contractor shall engage inspection and testing services to perform the minimum quality control testing described in the retaining wall design plans and specifications. Only qualified and experienced technicians and engineers shall perform testing and inspection services.

D. Quality control testing shall include soil and backfill testing to verify soil types and compaction and verification that the retaining wall is being constructed in accordance with the design plans and project specifications.

00511.90 PAYMENT

Payment for work specified under this section will be by Lump Sum.

SECTION 00540 – STRUCTURAL CONCRETE

Comply with Section 00540 of the Standard Specifications modified as follows:

00540.90 Payment – Add the following pay items in the pay item list:

Pay Item	Unit of Measurement
(e) Concrete Low Wall and In-Lay	LS

SECTION 00551 – PRECAST CONSPAN BRIDGE

Section 00551, which is not a Standard Specification, is included in this Project by Special Provision.

00551.00 Scope

Adhere to the drawings and specifications shown on the project drawings, sheets C-18 to C-21.

00551.90 Payment – Add the following pay item:

Pay Item	Unit of Measurement
(a) ConSpan Bridge and Foundations	LS

SECTION 00593 - POWDER COATING METAL STRUCTURES

Comply with Section 00593 of the Standard Specifications modified as follows:

00593.10(b) Specifications - Replace the paragraph that begins "Furnish a polyester topcoat...", with the following paragraph:

Furnish a polyester topcoat meeting the requirements of the American Architectural Manufacturers Association (AAMA) Specification 2604.

Add the following to the end of this subsection:

Provide a topcoat color of semi-gloss black that matches Federal Standard 595B color # 27038.

00593.44 Inspecting and Testing - In the list of tests, replace the Hardness line with the following line:

Hardness ..... AAMA 2604 and ASTM D 3363

SECTION 00641 - AGGREGATE SUBBASE, BASE, AND SHOULDERS

Comply with Section 00641 of the Standard Specifications modified as follows:

00641.10 Materials - Add the following sentence after the first sentence: Base aggregate shall be 3/4"-0 size, except for beneath the access road only, where 1-1/2”-0 size is specified.

SECTION 00730 - EMULSIFIED ASPHALT TACK COAT

Comply with Section 00730 of the Standard Specifications modified as follows:

00730.00 Scope – Add the following:

Apply asphalt tack coat to existing pavement surfaces that are to be overlaid, joints between new and old pavements or structures, and to bridge decks. Tack coat will also be required between pavement courses.

00730.44 Applying Tack Coat – Delete the second sentence in the first paragraph and substitute the following:

Apply the tack coat to the prepared surfaces for the conditions and rates shown:

APPLICATION SURFACE	APPLICATION TEMPERATURE RANGE	GAL/YD^2 (of Surface Area)
New Bituminous Surfaces	124º F – 168º F	0.035
Existing Surfaces	124º F – 168º F	0.070

00730.80 Measurement – Replace this subsection, except for the subsection number and title, with the following:

There will be no separate measurement of emulsified asphalt tack coat quantities.

00730.90 Payment – Delete the first two paragraphs of this subsection and replace with the following paragraph:

No separate or additional payment will be made for emulsified asphalt tack coat.

SECTION 00745 - ASPHALT CONCRETE PAVEMENT - STATISTICAL ACCEPTANCE

Comply with Section 00745 of the Standard Specifications modified as follows:

00745.00 Scope – Add the following paragraph to the end of this subsection:

All open graded mix shall be foam treated with water. Contractor may elect to reduce the target liquid asphalt content 0.10%. The Engineer may direct further reduction to liquid asphalt content after control strip construction.

00745.02 Definitions – Amend the definitions as follows:

Asphalt Concrete Pavement – Uniformly coated mixture of asphalt cement, graded aggregate, and additives as required. The use of ACP in this section refers to either hot mix, warm mix, dense graded or open graded asphalt concrete.

Lot Size – Add the following sentence and bullet items to the Lot Size definition:

In the event that more than one road appears in the contract, roads may be evaluated on an individual basis. Small roads with similar characteristics may be grouped together as the Engineer elects.

x Material produced under the same JMF, but placed in different lifts, will be considered to be a separate lot.

x Small lot size, roads containing asphalt quantities less than 1,750 tons will be evaluated on the basis of test results from a minimum of three (3) random samples.

Sublot Size - Delete the words “1,000 tons” and replace with “500 tons”.

00745.10 Aggregate - Add the following paragraph:

Production crushing and stockpiling of aggregate for use in ACP will be at the sole discretion of the Contractor in accordance to Section 00165 of these Special Provisions.

00745.10(a-1-a) Separated Sizes – Delete the third sentence from the first paragraph.

00745.10(a-1-b) Scalping – Delete this subsection.

00745.10(a-2-b) Separated Sizes – Delete this subsection.

00745.10(a-2-c) Grading – Delete all but the first sentence of this subsection.

00745.10(a-3-b) Separated Sizes – Delete this subsection.

00745.10(a-3-c) Grading – Delete all but the first sentence of this subsection.

00745.10(a-3-d) Combination of Fine Aggregate for Testing – Delete this subsection.

00745.10(b) Reclaimed Asphalt Pavement – Add the following to the end of the first paragraph:

No more than 15% RAP will be allowed in open graded ACP.

00745.10(f) Aggregate Production Quality Control – Delete the second sentence.

00745.10(g) Preproduced Aggregate – Replace this subsection, except for the subsection number and title, with the following:

The material shall meet the requirements of 00745.10.

00745.11(a) Asphalt Cement – Add the following:

Use PG 64-22 grade asphalt for dense graded ACP or grade approved by Engineer. Use PG 64-22ER for open graded ACP, or grade approved by Engineer.

In addition to the requirements in the ODOT Standard Specifications for Asphalt Materials, the PG 64-22ER grade for ACP shall meet the following limit when tested according to AASHTO T 301 "Standard Method of Test for Elastic Recovery Test of Asphalt Materials by Means of Ductilometer". The samples will be conditioned per AASHTO T 240 "Standard Method of Test for Effect of Heat and Air on a Moving Film of Asphalt (RTFOT) prior to testing per AASHTO T301. The specified Temperature for section 3.3 of the AASHTO T 301 procedure shall be 77°F.

% Elastic Recovery – **50** minimum.

00745.12 Mix Type and Broadband Limits – Add the following mix type and broadband limits at the end of this section:

Open Graded Mixes

Sieve Size	**1/2" Open**		**3/4"Open**	
	Control Points (% passing by Weight)		**Control Points (% passing by Weight)**	
	Min.	**Max.**	**Min.**	**Max.**
1"			99	100
3/4"	99	100	85	96
1/2"	90	98	55	71

No. 4	18	32	10	24
No. 8	3	15	6	16
No. 200	1.0	5.0	1.0	6.0

00745.13 Job Mix Formula Requirements – Delete last paragraph and add the following:

A CMDT will prepare, sign and submit a JMF to the Engineer for each mixture according to ODOT Contractor Mix Design Guidelines for Asphalt Concrete. The Engineer will verify the performance characteristics of all Contractor provided JMF. Submit material samples for verification testing no later than March 1 of the calendar year of the anticipated use of ACP mixture. Furnish representative samples of materials to be used in the JMF verification testing as follows:

Materials	**Amount**
New Coarse Aggregate	100
lbs * New Fine Aggregate	100
lbs Reclaimed Asphalt Concrete	45
lbs Hydrated Lime	5
lbs Mineral Filler	5
lbs	
Asphalt Cement (without antistrip)	3 gal in 1-qt cans
Antistrip Additive	1 qt

*If coarse or fine aggregate is in multiple stockpiles, divide the submittal evenly between stockpiles.

Agency will verify open graded mix designs within 30 days of receipt of all materials from Contractor.

00745.13(a) Job Mix Formula Requirements – Add the following mixture and associated requirements:

Open Graded Mixture
3/4" Open and 1/2" Open

Design Method	ODOT
Air Voids, %	13.5 16.0
Draindown, %	70 – 80
TSR *, minimum	80
VFA, %	40 – 50

Add the following to the end of this subsection:

A request for an adjustment to the JMF targets may be made to the Engineer by the Contractor's CAT-II. The requested change will be reviewed and documented by the Engineer. If acceptable, a revised JMF will be allowed. Clearly document the sublot test for which the adjusted targets are in effect. Adjustments for gradation shall not exceed the

tolerances specified below. Adjustments for AC content shall be within 0.5% of the original JMF, but shall not exceed the requirements of 00745.10(b). Regardless of these tolerances, the adjusted JMF shall be within the mixture specification control points of 00745.12. If a redesign of the mixture becomes necessary, submit a new JMF according to the requirements of the Specifications.

Aggregate Passing Sieve Size	**(%) From JMF**
No. 4	+/- 2
No. 8	+/- 1
No. 30	+/- 1
No. 200	+/- 0.5

Field adjustments will not be made unless the change produces material of equal or better quality. Adjustments beyond these limits will require development of a new JMF according to
00745.13(a). The adjusted JMF, plus or minus the allowed tolerances, shall be within the broadband limits specified in 00745.12(b).

00745.13(b) Performance Test – Delete this subsection.

00745.14 Tolerances and Limits - Replace the tolerance list with the following tolerance list:

Gradation Constituent	**Dense-Graded ACP Type**			**Open-Graded ACP TYPE**	
	3/4"	**1/2"**	**3/8"**	**3/4"**	**1/2"**
1"	JMF ± 5%*			99 - 100%	
3/4"	90 - 100%	JMF ± 5%*		85 - 96%	99 - 100%
1/2"	JMF ± 5%	90 - 100%	JMF ± 5%*	55 - 71%	90 - 98%
3/8"**	90 - 100%				
No. 4	JMF ± 5%	JMF ± 5%	JMF ± 5%	JMF ± 5%	JMF ±5%
No. 8	JMF ± 4%	JMF ± 4%	JMF ± 4%	JMF ± 4%	JMF ±4%
No. 16**					
No. 30	JMF ± 4%	JMF ± 4%	JMF ± 4%	JMF ± 4%	JMF ±4%
No. 50**					
No. 100**					
No. 200	JMF ± 2.0%	JMF ± 2.0%	JMF ± 2.0%	JMF ± 2.0%	JMF ± 2.0%

* Maximum not to exceed 100%
** Report percent passing sieve when no tolerance is listed

In the “Constituent of Mixture” table; Moisture content at time of discharge test, delete “AASHTO
T329” and replace with “AASHTO T329 or AASHTO T255, Microwave method”.

00745.16 Asphalt Concrete Pavement Production QC/QA – Delete subsections (a)

and (b)in their entirety and add the following:

Quality control sampling and testing by the Contractor, as defined by the Standard Specifications, is suggested but not required. The Contractor is required to perform sufficient testing to insure compliance to the material requirements, for both asphalt mix and compaction.

MDV for open graded ACP may require adjustment. Adjust asphalt content and gradation targets for open graded ACP during production as directed. The Engineer will document the sublot test for which the adjusted targets are in effect.

00745.16(c) Quality Assurance and Acceptance – Replace this subsection, except for the subsection number and title, with the following:

The Engineer, according to Section 00165.40 and the following, will perform acceptance sampling and testing of ACP**:**

(1) Random Sampling – Random sampling of HMAC shall be performed by Lane County according to the following:

(a) Grade Samples – A minimum of one grade sample from each lot or sublot after placing and before rolling. Samples will not be taken within 1 foot of the edge of the panel. Samples will be obtained according to AASHTO T168.

(b) Plant Samples – A minimum of one sample from each lot or sublot from the discharge of the paving plant mixer and before placing into a storage silo or hopper when:

- The nominal compacted thickness as shown on the typical section of the plans, for an entire pavement panel will be less than 1 1/2 inches.
- The paving panel being placed is less than 8 feet wide.
- Paving miscellaneous areas, such as driveways, approaches, guardrail flares, and areas of restricted width or limited length.
- Paving temporary surfacing or leveling courses.
- Paving open-graded mixtures.

(c) Moisture Samples – Moisture samples will be taken from the discharge of the paving plant mixer a minimum once each day, or as directed.

(d) Partial Sublots – Each day, at the end of the production shift, regardless of the project size, the quantity exceeding the 750-ton sublot increment by 250 ton, or less, shall be represented by the previous 750-ton sublot. If the quantity exceeds the 750-ton sublot increment by more than 250 ton, the quantity shall be considered an independent sublot.

(2) Testing – ACP testing shall be performed by the Engineer according to the following:

(a) Asphalt Cement Content – Test according to "Asphalt Content by Ignition Method, Lane County Procedure" (a modified AASHTO T308). The test procedure is available from the Project Manager.

(b) Aggregate Gradation – Test according to AASHTO T27 test method.

(c) Moisture Content – Test according to AASHTO T255 test method, Microwave Method.

(d) Compaction – Acceptance testing for compaction will be according to Section 00745.49. For any failing sublot of pavement, the Contractor may request one new backup compaction test on the same day. New nuclear gauge tests will be obtained at new randomly selected sites. The average of these five new nuclear density tests will constitute the backup in-place density of the sublot. The higher of the original and backup test results will prevail.

The Engineer may test any area that appears defective in compaction and require further compaction or corrective action on any area that does not meet specifications.

(e) Backup Testing – If the gradation test result of the sieve analysis varies from the JMF by 1.5 times or more from the tolerance limits specified in 00745.14, a backup sample from the random grade sample will be tested. The test result, which yields the highest CPF for that sublot, will be used. If the original and backup test results yield the same CPF, the original test results will be used.

(f) Minimum Pay Factor for Each Constituent – Stop production when the pay factor for any constituent with a weighting factor greater than 1 falls below 0.75. Resume production when the Engineer accepts a plan for correction.

00745.17 Small Quantity Acceptance – Replace this subsection, except for the subsection number and title, with the following:

When the quantity of ACP on a Project is less than 1,750 tons or less than three test results are obtained, the Engineer may accept the ACP according to Section 00745.16(c) of these Special Provisions. The test results will be evaluated in accordance to 00745.95(a) of these Special Provisions.

00745.17(b) Outside Specifications Limits – Replace the first sentence with the following:

If a sublot sample test result for any constituent is 1.5 times or more outside the specification limit, the Engineer will have the backup sample tested.

00745.17(b-2) Backup Out of Specification – Replace this subsection, except for the subsection number and title, with the following:

If the backup sample test results are out of specification, an adjustment will be calculated according to 00745.95(a-1). The test results that produce the lowest Cumulative Weighted Deviation will be used in the price adjustment calculation.

00745.17(b-3) In Place Samples – Delete this subsection:

00745.43(b) Heating Temperatures – Add the following at the end of the Table:

	AC Temperature °F	
Grading Type	**Maximum At Mixer**	**Minimum Behind Paver**
Open Graded ACP	**350**	**205**

00745.46(b) Depositing - Replace the paragraph that begins "Deposit ACP from..." with the following paragraph:

Deposit ACP from the hauling vehicles so segregation is prevented. Do not deliver the ACP directly into the paving machine for wearing courses where the continuous length of the panel is greater than 500 feet. Deliver the ACP to the paving machine by either a windrow pick-up machine or an end-dump transfer machine.

00745.46(c) Placing – Add the following:

The Engineer will establish leveling locations and paving needs.

Paving equipment used shall be sized appropriately for the size roads listed in the contract. Equipment that is either undersize or oversize for the intended work, which will not produce satisfactory workmanship, will be replaced with appropriately sized equipment.

Change the reference in the last paragraph from 00745.16(b-1) to 00745.13(a) of these Special Provisions.

00745.49 Compaction: – Add the following:

The QC program as described in this section of the Standard Specifications will not be used. The Engineer will perform acceptance compaction testing using procedures as modified or added in these Special Provisions. The Contractor is responsible to perform sufficient compaction testing to insure minimum compaction requirements have been attained.

00745.49(b) Normal Pavement (Nominal Thickness 2 inch or Greater) – Replace the subsection heading with the following:

00745.49(b) Normal Pavement (Nominal Thickness 1 1/2 inch or Greater)

00745.49(b-1) General – Replace the paragraph that begins "For Level 2 and Level 3..." with the following paragraph:

For dense and open graded Level 2, Level 3, and Level 4 mixes, the Contractor provided QC shall construct a control strip at the beginning of work on each JMF on the project according to ODOT TM306. The purpose of the control strip is to determine the maximum density and smoothness (00745.70) that can be achieved for the JMF, paving conditions, and equipment on the project. Additional control strips are necessary when there is a change in compaction equipment or when JMF targets are adjusted according to 00745.16(b-1-a). The Engineer may waive the control strip for irregular areas or areas too small to establish a reasonable roller pattern.

Add the following to the fourth paragraph:

Pneumatic tired roller will be required on Level 2 ACP, unless waived by the Engineer.

00745.49(b-2) Random Testing – Delete reference to "QC" in the first sentence.

Add the following after the first sentence:

Random locations will be as determined by the Engineer.

00745.49(b-2-a) Testing – Add the following:

Sanding of test locations will not be required.

00745.49(b-2-b) Core Correlations of Nuclear Gauge Readings – Replace this subsection, except for the subsection number and title, with the following:

Core correlation of the nuclear gauge readings is not required. If core correlations are requested, and approved, determine the core correlation factors according to WAQTC TM8 and ODOT TM327. Cut the required cores and patch the core holes with dense graded ACP.

The party requesting core correlations will pay the costs of coring and lab testing of cores. The costs of nuclear gauge testing performed by each party will be paid by each party.

00745.49(b-4) Test Results - Delete the sentence and replace with the following:

The Engineer will provide density test results to the Contractor by the middle of the following work shift.

00745.49(c) Thin Pavement – Replace this subsection, except for the subsection number and title, with the following:

Compaction to a specified density will not be required for leveling, patches, or where the nominal compacted thickness of a course of dense graded mixtures will be less than 1 1/2 inches. Perform breakdown and intermediate rolling until the entire surface has been compacted by at least four coverages of the roller(s). Perform additional coverages, as directed, to obtain finish rolling of the ACP. In areas where pre-leveling is greater than 1 1/2

inches, the ACP shall be compacted to a minimum of 91.0 of the JMF's most recent Maximum Density result.

Add the following subsection:

00745.49(f) Open Graded ACP – Compaction of open graded ACP to a specified density will not be required.

Use only steel-wheeled roller(s) for compaction. Continue the breakdown and intermediate rolling until the entire surface has been compacted with at least four coverages by the roller(s). Perform additional coverages, as directed, to obtain finish rolling of the ACP.

Add the following subsection:

00745.51 Opening Sections to Traffic - Schedule work so, that during the same shift, the surfaces being paved are paved full width and length through the wearing course before opening to traffic.

00745.70 Pavement Smoothness - Replace this subsection with the following subsection:

00745.70 Pavement Smoothness - Construct the pavement wearing surface of travel lanes to a profile that does not deviate from longitudinal and transverse smoothness more than the specified limits of 00745.73.

Perform smoothness testing under the supervision of the Engineer with equipment furnished and operated by the Contractor at the Contractor's expense. Complete all required smoothness testing no later than seven calendar days following final completion of all travel lane paving on the Project. The Contractor accepts the risk that the smoothness may be affected by exposure to traffic between the date the travel lanes are paved and the date the smoothness testing is completed. If the Contractor elects to perform smoothness measurements on a day other than the day the pavement is placed, additional traffic control required for smoothness measurement, and not required for other work, will be at the Contractor's expense.

Add the following subsection:

00745.72 Smoothness Testing Equipment - Furnish all equipment and supplies for determining smoothness.

(a) Straightedge - Provide one 12 foot straightedge.

(b) Rolling Straightedge – Provide one 12 foot rolling straightedge capable of measuring, on an exaggerated scale, deviations in the paved surface, at the center of the scale, to accuracy of 0.002 foot or less. If requested by the Engineer, the Contractor shall demonstrate the accuracy of the measuring device by setting the equipment up on a flat surface and passing the sensing mechanism over an item of known height. In all cases, the equipment shall be subject to acceptance by the Engineer.

Add the following subsection:

00745.73 Smoothness Testing and Surface Tolerances - Test according to the following:

(a) General - Test the base and wearing courses with a 12 foot straightedge and a 12 foot rolling straightedge as directed.

(b) Base Course Surface Test:

(1) Transverse - Test with the 12 foot straightedge perpendicular to the centerline, as directed. The pavement surface shall not vary by more than 0.02 foot.

(2) Longitudinal - Test with the 12 foot rolling straightedge parallel to the centerline, as directed. The pavement surface shall not vary by more than 0.02 foot.

(c) Wearing Course Surface Test:

(1) Transverse - Test with the 12 foot straightedge perpendicular to the centerline, as directed. The pavement surface shall not vary by more than 0.02 foot.

(2) Longitudinal – Test with the 12 foot rolling straightedge over the full width of travel lanes for the entire length of the project, or as directed by the Engineer. The pavement surface shall not vary by more than 0.015 foot.

(3) Transverse Joints - Test with the 12 foot straightedge parallel to the centerline, as directed. The pavement surface shall not vary by more than 0.02 foot.

(d) Utility Appurtenances - If the Contractor is required to construct or adjust utility appurtenances, such as manhole covers and valve boxes, the pavement surface shall not vary by more than 0.02 foot.

(e) Shoulders and Paved Medians - Test the base and wearing course with the 12 foot straightedge parallel to and perpendicular to the centerline for shoulders and paved medians. The pavement surface shall not vary by more than 0.02 foot.

00745.75 Correction of Pavement Roughness - Replace this subsection with the following subsection:

00745.75 Correction of Pavement Roughness - Should testing described in 00745.73 show the pavement does not conform to the prescribed limits of deviation, the following shall apply:

(a) General - The Contractor, under the supervision of the Engineer, is responsible

for locating areas that require corrective work.

(b) Base Course - If the requirements of 00745.73(b) are not met, correct according to one of the following and retest.

(1) Cold - Plane Removal - Profile with equipment meeting the requirements of Section 00620.20 to a maximum depth of 0.03 foot.

(2) Grinder - Profile with abrasive grinder(s), equipped with a cutting head comprised of multiple diamond blades to a maximum depth of 0.03 foot.

(c) Wearing Course - After the Contractor has located and staked all individual deviations exceeding 0.02 foot, the Engineer and the Contractor shall meet at a mutually agreed upon time and drive the Project together. Each deviation will be evaluated during the drive-through to determine what corrective work will be required. Disagreements will be resolved by the Engineer.

Correct all individual deviations identified for corrective work during the drive-through and any transverse joint that exceeds the requirements of 00745.73(c-3) by one of the methods listed below to the specified limits.

(1) Remove and Replace - Remove and replace the wearing surface lift. Removal and replacement is required when in the opinion of the Engineer a durable long-term repair of the defect cannot be accomplished by conventional means.

(2) Grind - Profile with abrasive grinder(s) equipped with a cutting head comprised of multiple diamond blades to a maximum depth of 0.3 inch and apply an emulsion fog seal as directed.

Under the observation of the Engineer, retest each location requiring corrective work according to 00745.73 with a 12 foot rolling straightedge to verify that the deviation has been corrected to within the 0.02 foot tolerance. Perform all corrective work and surface tolerance testing at the Contractor's expense, including traffic control.

(d) Utility Appurtenances – If the requirements of 00745.73(d) are not met, the Contractor shall perform sawcutting, removal and readjustment of the utility appurtenance(s) to the required elevation(s) and/or perform other corrective measures to the satisfaction of the Engineer.

(e) Time Limit - Complete correction of all surface roughness within 14 calendar days following notification, unless otherwise directed.

00745.80 Measurement – Delete this section and add the following:

The accepted quantities of ACP will be measured by the Ton according to Section 00190. No separate measure will be made for the asphalt cement used in the asphalt concrete mixture. No deduction will be made for lime or any other additive used in the mixture.

The quantities of ACP shown in the Schedule of Items were computed on the basis of aggregates having a Specific Gravity of 2.65. The provisions of 00140.20 and 00195.20 will apply.

00745.90 Payment – In the paragraph that begins "In item (a), the following will be inserted" replace the third bulleted item with the following:

- The words "Dense" or "Open" will be inserted in the third blank.

In the paragraph that begins "In item (a), the following will be inserted" replace the fourth bulleted item with the following:

- The words "in Base and Leveling" or "in Approaches and Pavement Repair" will be inserted in the fourth blank when applicable.

Replace the last paragraph of this section with the following:

No payment will be made for anti-stripping additives required to supplement the JMF to attain minimum mixture performance characteristics. If anti-stripping additives are required by the contract, payment will be at the unit bid price included in the schedule of items.

Add the following paragraph to the end of this subsection:

No separate or additional payment will be made for asphalt cement used in the mixture.

00745.95 Price Adjustments – Delete the first paragraph and add the following:

On larger projects with three or more sublots the CPF will be calculated in accordance to the provisions of the Standard Specifications as amended by these Special Provisions. The CPF will be made available to the Contractor within 24 hours of final compilation of the acceptance test results. On smaller projects where there is less than three sublots tested, the Cumulative Weighted Deviation will be computed as outlined in subsection (a) of this section.

Replace the Table addressing Pay Factors PF for compaction with the following Table:

Type / Method	PF	Maximum PF
Normal Pavement		
MAMD Method	1.00	
Thin Pavement	1.00	
Open Graded ACP	1.00	
Other Areas	1.00	

Add the following subsection:

(a) Small Quantity Price Adjustment

(1) Aggregate Gradation and Asphalt Content:

A deduction of 1.0% of the in-place price for asphalt concrete and asphalt cement will be made for each 1.0% Cumulative Weighted Deviation beyond the allowable tolerance of each component of the job mix formula. The following factors will be used to calculate deduction due to deviations from the job mix formula.

Deviation Weighting

Asphalt Content	12 X Deviation
Passing No. 200 (0.075 mm)	3 X Deviation
Passing No. 30 (0.600 mm)	1.5 X Deviation
Passing No. 8 (2.36 mm)	1.5 X Deviation
All other sieves	1.0 X Deviation

The Cumulative Weighted Deviation is the sum of all weighted deviations as determined from the table above. Where cumulative weighted deviation equals or exceeds 15.0% the Engineer may require the Contractor to remove and replace defective materials at no cost to the owner. When asphalt paving materials with a cumulative deviation of less than 15.0% are furnished, material will be accepted and the Engineer shall deduct from payments to the Contractor an amount equal to the cumulative weighted percentage deviations from the job mix formula.

(2) Compaction

Asphalt concrete pavement which does not comply with compaction requirements shall be removed and replaced or, at the discretion of the Engineer, be subject to a price reduction determined from the following table.

Compaction Price Reduction Schedule

Specified % Maximum Density	% Pay*
92.0 and above	100
91.5 - 91.9	95
91.0 - 91.4	90
90.5 - 90.9	85
90.0 - 90.4	80
89.5 - 89.9	70
89.0 - 89.4	60
Below 89.0	**

*Applies to price of in-place ACP including asphalt cement
** Remove and replace.

Add the following subsection:

00745.96 Asphalt Cement Price Adjustments - Asphalt cement escalation/de-escalation price adjustments will be computed as specified in Section 00195 of these Special Provisions.

SECTION 00756 – PLAIN CONCRETE PAVEMENT

Comply with Section 00756 of the Standard Specifications modified as follows:

00756.10 Material - Add the following paragraph to the end of this subsection:

All concrete flat work to receive fiber mesh reinforcement. Fibermesh 300 or approval equal. Contractor shall submit mix design to Engineer for approval.

00756.90 Payment – Add the following pay items in the pay item list:

Pay Item	Unit of Measurement
(c) Concrete Flat Work	LS

SECTION 00760 – GRASS PAVERS

Section 00760, which is not a Standard Specification, is included in this Project by Special Provision.

Description

00760.00 Scope - This section describes the requirements for materials and work required for Grass Paving System for grass surfaces. Work shall include all labor, materials and equipment to complete the installation of the gravel subbase, paver material, free draining growing medium sand, and grass sod or seed as specified and as shown on plan details.

00760.08 Submittals

Submit copy of manufacturer's product data and samples on all materials specified herein. Engineer shall approve all products prior to installation.

Contractor shall submit to the Engineer for review and approval manufacturer's product data on grass paver materials (sample and product data), sample anchoring device, and one-gallon samples of the free draining growing medium sand materials with required test data, and sample and certification for grass sod or seed varieties used on the project.

Materials

00760.10 General

(a) Manufacturers

CONTECH Construction Products, Inc. 200
Enterprise Drive
Scarborough, ME 04074
Phone: 1.877.907.8676

Or Approved Equal

(b) Materials

1. Subbase Gravel: Subbase gravel aggregate to be¾ inch minus crushed rock with no more than 3% passing the #200 sieve. Material will be nearly neutral in pH to provide proper growing medium for natural grass.

2. Paver Material: Lightweight injection-molded plastic units usually supplied in pallet format, stacked 114 pieces high, 32 in. x 32 in. square units with hollow clover-shaped cups rising from a strong open grid allowing maximum water infiltration and conveyance. The paver material shall be fabricated from polypropylene/polyethylene copolymer. Protect paver material from damage

during delivery and store under a tarp or out of sunlight when the time of delivery to installation exceeds 30 days.

3. Sand: Free draining growing medium sand shall be 100% clean sharp sand or washed concrete sand with an infiltration rate of at least 10" per hour when compacted. Material will be nearly neutral in pH to provide proper growing medium for natural grass.

4. Grass: Reference Landscape drawings and Section 1040. Use grass species that grow well in the geographical area where the product is being installed and are resistant to wear in traffic areas. Grass plants can be introduced by either clean washed or sand based sod or seeding method. Sod with silt and clay content of over 5% will be rejected.

Construction

00760.40 General

(a) Preparation

1. Representatives of the Owner, Engineer and Contractor shall meet and inspect completed subgrade prior to start of grass paver system construction. The inspection meeting shall occur after subgrade has been laser graded. If the subgrade meets the requirements of the applicable plans and specifications, the installation of the subbase gravel material shall begin immediately to protect the subgrade from weather and construction activities.

2. Determine condition of subgrade and remove any material that may cause damage, wear or puncturing of subdrain system materials. Check for improperly compacted trenches, debris, and improper gradients. Do not start installation until all undesirable conditions have been corrected.

3. Ensure that any sharp objects on the subgrade are removed to avoid penetration through the paving surface. Keep the subgrade surface as smooth as possible while working.

(b) Installation

1. The Contractor shall commence the work after entire subgrade has been fine graded and compacted to specified tolerance. Absolutely no installation of the paver system (i.e. subbase gravel, paver material, free draining growing medium sand) shall begin without the prior approval of subgrade by Owner and Engineer. Elevations of the subgrade shall strictly conform to the grading plan for the desired installation area. The Contractor shall immediately notify Owner, and Engineer if the subgrade does not appear to meet specified tolerances or other noticeable problems appear to exist,

such as soft areas or settlement problems.

2. Install subbase course material over prepared subgrade to elevations and depths shown on plan. Install material in lifts that do not exceed 6 inches, compacting each lift to 95% density.

3. Install the paver material in accordance with manufacturers illustrated installation manual. Use connectors provided to maintain proper spacing and to interlock the units. Paver core units to be installed with the larger clover opening facing down. Units shall be shaped to the installation areas by removing rings and grid with appropriate cutting device. Units placed on slopes and vertical surfaces shall be appropriately secured to maintain units in place. Paver material shall be covered if exposed to the sun and outside elements for more than 30 days.

4. After the installation of the paver materials, fill clovers with free draining growing medium sand. The sand shall be installed using methods that will not disturb or damage paver material. Sand shall be installed no higher than ¼ inch above the top of the paver. Once the sand is installed, brush the top of the rings using a finishing broom and water settle the sand to remove any air voids and to achieve proper compaction.

5. Install granular starter fertilizer over established growing medium sand with non-invasive fertilizer spreader.

6. Install grass plants over the growing medium sand by the preferred method of seeding or sodding at rates shown on plans, specifications, and per local supplier recommendations. Coverage of the sand must be uniform and complete. Proper maintenance of the grass plants shall take place until full coverage of turf is established and accepted by the Owner and Engineer. Establishment period will vary with method of grass installation utilized. Seeding will normally require 6 to 8 weeks, sod 3 to 4 weeks. In both cases, enough time must be given for the grass roots to grow through the grass pavers, firmly anchoring the paver to the subbase. Seeded areas lacking in proper germination will be reseeded immediately. Sod and seed must be kept moist and fertilized at all times to prevent drying out and achieve a proper grow-in of turf. For seeding method, a light roller should be used to achieve proper seed to sand contact. For sodding method the moist sod should be rolled or plate compacted until bottom of sod touches the top of the paver material. DO NOT aerate finished paving lawn surfaces.

00760.90 PAYMENT

Payment for work specified under this section will be by Square Feet.

SECTION 00815 - BOLLARDS

Comply with Section 00815 of the Standard Specifications modified as follows:

00815.10 Materials - Replace the reflective sheeting line with the following:

Reflective tape – 3 inch wide white/silver reflective tape

00815.40 Bollard Boulders and Scattered Boulders – Add the following to this subsection.

Install scattered boulders and boulder bollards as shown or as directed.

00815.90 Payment – Add the following pay items in the pay item list:

Pay Item	Unit of Measurement
(c) Bollard Boulders and Boulders	LS

SECTION 00860 - LONGITUDINAL PAVEMENT MARKINGS - PAINT

Comply with Section 00860 of the Standard Specifications modified as follows:

00860.45 Installation - Replace this subsection, except for the subsection number and title, with the following:

Apply painted longitudinal pavement markings as follows:

- Apply one application at thickness of 15 mils wet, equivalent to 17 gallons per mile for a 4 inch wide solid stripe.
- Apply reflective elements at a minimum rate of 5 pounds per gallon of paint. Embed by means of wicking, a minimum of 80 percent of the reflective elements in the paint to a minimum depth of 50 percent of their diameter.

Minimum initial retroreflectivity shall be:

- White - 250 $mcd/m^2/lx$

00860.90 Payment - Replace this subsection with the following.

Payment includes all pavement markings. The accepted quantities of work performed under this Section will be paid for at the Contract unit price, per unit of measurement, for the following item:

Pay Item	Unit of Measurement
(a) Pavement Markings	LS

SECTION 00940 – SIGNS

Comply with Section 00940 of the Standard Specifications modified as follows:

00940.00 Scope – Add the following under this subsection:

Work also includes installing all signs as shown on the drawings, and includes furnishing all materials necessary to complete this work.

00940.90 Payment – Replace this subsection and add the following pay items:

Pay Item	**Unit of Measurement**
(a) Signs	LS

SECTION 00960 - COMMON PROVISIONS FOR ELECTRICAL SYSTEMS

Comply with Section 00960 of the Standard Specifications modified as follows:

00960.41(f) Disposition of Waste Materials - Replace this subsection with the following subsection:

00960.41(f) Disposal of Materials - Dispose of all materials according to 00290.20.

00960.45 Cable and Wire - In the paragraph that begins "Pull all wire...", replace the sentence that begins "Pull all wire..." with the following sentence:

Pull all wire and cable by hand and on a straight line with the conduit opening to prevent damage to wire and cable installation.

00960.90 Payment – Add the following sub-section and pay items:

Pay Item	Unit of Measurement
(a) Telecom Utility	LS
(b) Electrical and Lighting	LS

SECTION 00962 - METAL ILLUMINATION AND TRAFFIC SIGNAL SUPPORTS

Comply with Section 00962 of the Standard Specifications modified as follows: **00962.05(c) Illumination Supports** - Add the following to the end of this subsection:

Luminaires shall have a mounting height of 19.5 feet and 8 inch attachment arm. The luminaire pole shall be 4 inch square non-tapered steel.

00962.48 Coating - Replace this subsection, except for the subsection number and title, with the following:

Luminaire and luminaire pole shall be black in color.

Submit color sample for approval prior to ordering.

SECTION 00970 - HIGHWAY ILLUMINATION

Comply with Section 00970 of the Standard Specifications modified as follows:

Add the following subsection:

00970.50 Grounding and Bonding - In addition to the requirements of 00960.50 and 00962.50, ground and bond metal illumination poles and high mast towers according to the following:

Install 1 inch non-metallic conduit from the pole base to the concrete and polymer concrete junction box at each pole. Install a ground rod in each junction box and install No. 6 AWG copper ground wire from the ground stud in the pole base to the ground rod in the junction box. The ground rod may be installed in the same junction box that provides illumination circuitry to the pole, however, provide a separate and independent conduit for the ground wire. Bond all metal conduit and metal junction box covers, if used, together to the ground rod.

On the inside of high mast tower shafts, weld a 1/2 inch Type 308, 309, or 310 threaded stainless steel stud for a grounding lug. Locate the grounding lug 90 degrees from and level with the bottom of the handhole.

00970.80 Measurement - In the paragraph that begins "The estimated quantities of...", replace the sentence that begins "The estimated quantities of..." with the following sentence:

The quantities of lighting poles and arms are listed on the Project plans.

SECTION 01030 - SEEDING

Comply with Section 01030 of the Standard Specifications modified as follows: **01030.02 Definitions** - Add the following:

Seed from Local Genetic Stock - Seeds that are descendants of indigenous native plants from within a specified range of the Project Site. For this Project, the specified range shall include locations within the Willamette Valley Region or Southwestern Washington. Other specifications for seed still apply to Seed from Local Genetic Stock.

01030.13(a) Label - Add the following to the end of this subsection:
Provide alternate labeling for native plant seeds as follows:

- Deliver all seed in standard, sealed containers meeting the requirements of the Oregon Seed Law. See ORS 633.520 and OAR 630-56 for specific labeling requirements.
- In addition to the labeling requirements of the Oregon Seed Law, label all native seed containers with the date and location of where the original stock seed originated. Seed whose origin cannot be traced may not meet the definition of "native". For native seed collected for use on the Project, label containers with the date and field location of collection of each seed type.

01030.13(f) Types of Seed Mixes – Replace the sentence that begins “Seed mixes, quantities...” with Seed mixes, quantities and seeding rates are shown on the drawings.

Add the following subsection:

01030.14(b-4) Organic Fertilizer - Furnish organic fertilizer that analyzes 8% nitrogen, 3% phosphoric acid, and 5% soluble potash. Furnish fertilizer that has no toxicity to sites where it will be applied.

Add the following subsection:

01030.44(c) Organic Fertilizer - Apply organic fertilizer at a rate of 50 pounds per acre at the following locations:

- All seeded areas, but not closer than 50 feet to streams, storm system structures (catchbasins, areas drains), open water, or the Willamette River.

01030.48(b-1) Seed and Fertilizer - Replace the paragraph that begins "Apply seed and..." with the following paragraph:

Apply seed and fertilizer at the specified rates. When fertilizer and seed are to be applied in dry condition, except when compost material is used, apply them separately. When applied from separate compartments, the application may be done in one operation by one of the following methods:

01030.48(b-2) Dry Mulch - Replace this subsection, except for the subsection number and title, with the following:

a. **Compost Material Mulch** - Evenly apply compost material mulch with a pneumatic blower or other equipment that propels the material directly at the soil surface and achieves direct contact with the soil. Apply dry powder tackifier at the rates recommended by the manufacturer. Apply compost at a uniform depth of 2 inches. Apply at least 3 feet over the top of the slope or overlap the material into existing vegetation.

When seed is required, apply it by one of the following methods:

1. Two-step Pneumatic Application:

- **Step 1** - Apply fine compost to a uniform depth of 2 inches with a pneumatic blower or other equipment that propels the material directly at the soil surface and achieves direct contact with the soil.
- **Step 2** - Uniformly mix seed with additional compost material and apply the combined seed and compost material over the first layer to a depth of 1/4 inch with a pneumatic blower or other similar methods.

2. Two-step Pneumatic and Hydroseeding Application:

- **Step 1** - Apply fine compost to a uniform depth of 2 inches with a pneumatic blower or other equipment that propels the material directly at the soil surface and achieves direct contact with the soil.
- **Step 2** - Hydroseed over the first layer according to 001030.48(a) except do not use fertilizer unless shown.

The minimum living plant coverage for native plant seeding is 90 % of ground surface.

01030.71 Waste Disposal - Replace this subsection with the following subsection:

01030.71 Disposal of Materials - Dispose of all materials according to 00290.20.

SECTION 01040 - PLANTING

Comply with Section 01040 of the Standard Specifications modified as follows:

01040.00 Scope - Add the following:

Install rain garden as shown on the project drawings.

01040.02 Definitions - Add the following:

Plant Materials from Local Genetic Stock - Plants and seeds that are descendants of indigenous native plants from within a specified range from the Project Site. For this Project, the specified range includes locations within the Willamette Valley Region or Southwestern Washington. Other specifications for plant materials still apply to Plants from Local Genetic Stock.

01040.04(a) Planting Work Plan (PWP) - Add the following:

Make every effort to plant as many areas as possible during each bare root planting season (November 15 - April 15) throughout construction. Coordinate with other activities to anticipate which planting areas will be prepared and planted during each bare root season. Include this schedule in the Planting Work Plan and update it as bare root seasons approach, to include as many planting areas as possible.

01040.15 Soil Conditioners -

Add the following:

Use Commercially Manufactured Compost for all soil conditioner.

01040.17(e) Mycorrhizal Inoculates – Add the following to the end of this subsection:

Mycorrhizal granular inoculum shall consist of endomycorrhizae, ectomycorrhizae and trichoderma fungal species with a biostimulant package containing kelp, humic and fulvic acids, vitamins, and amino acids.

Mycorrhizal root dip gel inoculum shall consist of endomycorrhizal and ectomycorrhizal fungal species with a biostimulant package containing soluble kelp, humic and fulvic acids, vitamins B and C, and an organic starch based gel.

01040.18 Fertilizer - Add the following:

All fertilizer shall be organic.

01040.19(c) - Add the following bulleted item:

- Identify specific origin of genetic stock. Add the following subsection:

01040.19(i) Genetic Origin - All plants must be grown from Local Genetic Stock (see 01040.02) unless specified otherwise on Plant List.

01040.20 Mulch – Add the following:

All mulch at planting areas shall be organic bark mulch.

01040.22 Water - Add the following sentence to the end of this subsection:

Provide hand watering for all new plantings until plantings are established.

01040.23(c) Browsing Protectors – Replace this sentence with the following:

Flexible, semi-rigid, biodegradable, brown or light green in color, with stake supports.

01040.23(g) Tree Stakes and Ties - Add the following sentence to the end of this subsection.

Furnish chain-lock type tree ties (1 inch width).

01040.46 Soil Bio-Amendments – Replace the seventh bulleted item, which begins "Mycorrhizal inoculation", with the following:

☐Mycorrhizal inoculation:

At Trees - Sprinkle mycorrhizal granular inoculum within backfill material of planting hole to provide direct contact between inoculant and root system at manufacturer's recommended rate of 2 to 4 ounces per inch of stem caliper.

At Shrubs - Sprinkle mycorrhizal granular inoculum within backfill material of planting holes to provide direct contact between inoculant and root system at the following rates recommended by manufacturer:

4 inch pots/plugs under 16 inch height – 1 teaspoon

1 gal container/plugs over 16 inch height – 1 tablespoon

3 gal container – 2 tablespoons

5 gal container – 3 tablespoons

01040.47 Fertilizers - Replace the first sentence with the following sentence:

Incorporate organic fertilizer at the type and rate as follows:

Add the following:

Do not use fertilizer within 50 feet of streams, open water, storm system structures (catchbasins, areas drains), or the Willamette River. Use low-phosphorous fertilizer within 50 feet of detention ponds.

01040.48 Planting Area Preparation – Add the following after the first paragraph of this subsection:

Do not use herbicides within 150 ft. of streams, open water, or Willamette River. Manually remove weeds within these areas where possible.

01040.48(d) Method "D" (Rough Areas Seeded for Revegetation or Erosion Control) – Add the following to the end of the first paragraph:

Install dry mulch according to 01030.48(b-2) with specified seed.

Install organic fertilizer at the rate of 50 pounds per acre with dry mulch and seeding.

Prior to completion of any seeding, re-grade ruts, footprints, washouts, or any other irregularities. After seeding, plant specified trees as shown and re-seed areas as originally specified.

01040.90 Payment – Add the following pay items in the pay item list:

(g) Miscellaneous

Pay Item	**Unit of Measurement**
(f) Rain Garden	LS
(g) Rain Garden Planting	LS

SECTION 01095 - SITE FURNISHINGS

Section 01095, which is not a Standard Specification, is included in this Project by Special Provision.

Description

01095.00 Scope - This work consists of constructing site furnishings such as benches, picnic tables, litter receptacles, bicycle racks, and other furnishings as shown or directed.

Materials

01095.10 General:

(a) Benches - Provide benches meeting the following requirements:

- DuMor, Inc. Model 160-60 with middle arm
- Frame powder-coated "Black"

Contact DuMor, Inc., P.O. Box 142, Mifflintown, PA, 17059-0142, ph: (800) 598-4018

(b) Litter and Recycle Receptacles - Provide trash and recycle receptacles and lids meeting the following requirements:

- Litter: Victor Stanley Model SDC-36, surface mount, black
- Recycle: Victor Stanley Model RSDC-36, surface mount, black
- 36-gallon capacity can

(c) Bicycle Racks - Provide bicycle racks meeting the following requirements:

- Manufacturer: Radius Pipe Bending
- Bent-tube "hoop"-type, 36" height
- Hoops spaced 24 inches on-center
- Black powder-coat finish by the manufacturer after fabrication
- Securely mounted to concrete slab with expansion bolts

(d) Kiosks - Provide Icon Shelter Systems, Inc. Model SG6X12M-P4 per shop drawings provided by Icon Shelter Systems Inc.

Contact Icon Shelter Systems, Inc., 7900 Logistics Drive, Suite C, Zeeland, MI, 49464, ph: (616) 748-0985.

(e) Prefabricated Restroom – Provide the CXT Precast Ozark II™ Double Flush Toilet Building with modified chase, including the following options:

- Pre-wired and pre-plumbed
- Two unisex restrooms
- Stainless steel plumbing fixtures (2 lavatories; 2 water closets, 1 dual-height, ADA compliant drinking fountain)
- Automatic flush valves on water closets
- Hands-free valves on lavatories
- Three 16-guage galvanized steel doors with frames and heavy-duty door vents
- Exterior signing for all three rooms
- Lever handle locksets with deadbolts
- Magnetic door locks with timer in restrooms
- Two electric hand dryers
- Two exhaust fans, 270 CFM
- 200 amp electrical panel
- Three GFI outlets, includes one next to each sink
- Two three-roll toilet paper holders
- Three floor drains
- Two stainless steel mirrors
- Skylights in each restroom
- Exterior option: Wall – Field Stone lower fascia, Barnwood upper fascia. Colors to be confirmed by landscape architect.
- Exterior option: "Cedar Shake" roof texture, Color to be confirmed by landscape architect
- Ceramic tile interior floors and bottom 4 feet of interior walls (restrooms only)
- ADA grab bars
- ADA signs
- Two hose bibs (one in chase; one locking on exterior – freeze proof)
- Motion-controlled interior lights
- Photo cell-controlled exterior lights at entries
- Magnetic door locks with timer in restrooms
- The building must have a central utility chase with a minimum of 69 square feet of interior floor space available for plumbing, electrical and other utility needs.
- Floor cutouts in chase area for additional electrical and fiber conduits

The plumbing chase/storage area must have, at a minimum, the following amenities:

- Galvanized steel, 3' wide, door and frame with lever handle lockset and dead bolt.
- 200 amp electrical panel.
- Hose bib.
- Ceiling mounted light fixtures.
- GFCI outlet.
- Floor drain
- Wall mounted space heater.

Furnish plans stamped by an Oregon-licensed Professional Engineer.

Contact CXT Concrete Buildings, 3808 N. Sullivan Road, Building 7, Spokane, WA, 99216, Ph: (509) 921-8766.

(f) Concrete Low Wall, Cast-In-Place Concrete – Furnish materials for short wall according to the following:

Reinforcement	Section 00530
General Structural Concrete, Class 3300	Section 02001
Preformed Expansion Joint Filler	02440.10

Construction

01095.40 General - Install all site furnishings as shown and according to the manufacturer's recommendations.

01095.41 Litter Receptacles - Mount litter receptacles on a concrete pad and secure with galvanized 3/8-inch chain to a 4-inch galvanized steel post set 18 inches into the ground and concreted.

01095.42 Precast Restroom – Install the precast restroom according to equipment manufacturer's instructions and the requirements of Lane County.

Connect to potable water supply according to Section 01170.

01095.43 Short Wall Cast-In-Place Concrete – Construct short wall according to the applicable portions of Section 00530 and 00540.

Measurement

01095.80 Measurement:

- **(a) Unit Basis** - The quantities of benches, litter receptacles, and bicycle racks will be measured on the unit basis, per each.
- **(b)** Lump Sum Basis:
  - **(1) Interpretive Kiosk** – Interpretive kiosks will not be measured.
  - **(2) Prefabricated Restrooms** – Prefabricated restrooms will not be measured.

Payment

01095.90 Payment - The accepted quantities of site furnishings will be paid for at the Contract unit price, per unit of measurement, for the following items:

Pay Item	**Unit of Measurement**
(a) Benches	Each
(b) Litter Receptacles	Each
(c) Bicycle Racks	Each
(d) Interpretive Kiosk	Lump Sum

(e) Pre-fabricated Restroom	Lump Sum
(f) Picnic Tables	Each
(g) Security Camera	Each

Payment will be payment in full for furnishing and placing all materials, and for furnishing all equipment, labor, and incidentals necessary to complete the work as specified.

SECTION 01140 – POTABLE WATER PIPE AND FITTINGS

Comply with Section 01140 of the Standard Specifications modified as follows:

01140.90 Payment – Add the following pay items in the pay item list:

Pay Item	Unit of Measurement
(f) Water Utility	LS

SECTION 02926 - HIGHWAY ILLUMINATION MATERIALS

Comply with Section 02926 of the Standard Specifications modified as follows:

Add the following subsection:

02926.70 Luminaires for Trailhead Parking Lot Lighting - Luminaires shall be "Small Luminaire LED" by KIM Lighting. Model # 1SA-WP9SE3-60L5K120-BL-SF/TL. The luminaire shall be black in color to match the luminaire pole. All luminaires shall be controlled by one electronic timer. Electronic timer shall be Hubbell building automation CX lighting control panel with astronomic time clock with 64 schedules, or approved equal.

THE CITY OF SPRINGFIELD
OREGON

PLANS FOR PROJECT

SPRINGFIELD MILL RACE
STORMWATER FACILITY, BOOTH
KELLY TRAILHEAD & MILL RACE PATH

INDEX OF SHEETS

NO.	NAME	TITLE
1	T–1	TITLE SHEET
2	C–1	NOTES, SYMBOLS, AND ABBREVIATIONS
3	C–2	EXISTING TOPOGRAPHIC SURVEY & DEMO – WEST
4	C–3	EXISTING TOPOGRAPHIC SURVEY & DEMO – CENTRAL
5	C–4	EXISTING TOPOGRAPHIC SURVEY & DEMO – EAST
6	C–5	PROPOSED SITE PLAN – WEST
7	C–6	PROPOSED SITE PLAN – CENTRAL
8	C–7	PROPOSED SITE PLAN – EAST
9	C–8	GRADING PLAN SECTIONS – WEST
10	C–9	GRADING PLAN SECTIONS – EAST
11	C–10	GRADING CROSS SECTION I
12	C–11	GRADING CROSS SECTION II
13	C–12	FLOW CONTROL STRUCTURE & TYPICAL DETAILS
14	C–13	DIVERSION VAULT & OUTFALL RIPRAP DETAILS
15	C–14	WEIR, HEADWALL, & WING WALL PLANS & DETAILS
16	C–15	WEIR, HEADWALL, & WING WALL DETAILS
17	C–16	SLIDE GATE SECTIONS & DETAILS
18	C–17	RAILING & FENCE DETAILS
19	C–18	MILL RACE PATH & BRIDGE DETAILS I
20	C–19	MILL RACE PATH & BRIDGE DETAILS II
21	C–20	MILL RACE PATH & BRIDGE DETAILS III
22	C–21	MILL RACE PATH & BRIDGE DETAILS IV
23	C–22	MILL RACE PATH PLAN & PROFILE I
24	C–23	MILL RACE PATH PLAN & PROFILE II
25	C–24	EROSION & SEDIMENT CONTROL PLAN NOTES
26	C–25	EROSION & SEDIMENT CONTROL PLAN – WEST
27	C–26	EROSION & SEDIMENT CONTROL PLAN – CENTRAL
28	C–27	EROSION & SEDIMENT CONTROL PLAN – EAST
29	C–28	EROSION & SEDIMENT CONTROL DETAILS
30	TH–1	TRAILHEAD PROPOSED SITE PLAN
31	TH–2	TRAILHEAD GRADING PLAN
32	TH–3	TRAILHEAD RAIN GARDEN & UTILITIES DETAILS
33	TH–4	TRAILHEAD PARKING LOT & SIDEWALK DETAILS
34	TH–5	TRAILHEAD SHORT WALL, CONCRETE FEATURE, & RAIN GARDEN OUTFALL DETAILS
35	TH–6	TRAILHEAD RESTROOM DETAILS – SECTION VIEW
36	TH–7	TRAILHEAD RESTROOM UTILITY DETAILS – PLAN VIEW
37	TH–8	TRAILHEAD KIOSK DETAILS
38	TH–9	TRAILHEAD PLAZA AMENITIES & BOLLARD DETAILS
39	TH–10	TRAILHEAD ELECTRICAL & ILLUMINATION PLAN
40	TH–11	TRAILHEAD ELECTRICAL & ILLUMINATION DETILAS
41	TH–12	TRAILHEAD PAVEMENT MARKINGS & SIGNAGE
42	L–1	LANDSCAPE PLAN – WEST
43	L–2	IRRIGATION PLAN – WEST
44	L–3	LANDSCAPE AND IRRIGATION PLAN – CENTRAL
45	L–4	LANDSCAPE AND IRRIGATION PLAN – EAST
46	L–5	LANDSCAPE DETAILS
47	L–6	IRRIGATION DETAILS

HORIZONTAL DATUM

NAD 83/91 OREGON STATE PLANE COORDINATE SYSTEM SOUTH ZONE 3601 IN INTERNATIONAL FEET.

VERTICAL DATUM

NAVD88

BENCHMARK INFO:

NGS DESIGNATION, PID NO. QE0920. DESCRIBED BY NATIONAL GEODETIC SURVEY 1943. ALONG THE SOUTHERN PACIFIC RAILROAD, AT SPRINGFIELD, 135.5 FEET WEST OF THE SOUTHWEST CORNER OF THE RAILROAD STATION, APPROXIMATELY 200 FEET NORTHWEST OF AND ACROSS THE TRACKS FROM THE NORTHWEST CORNER OF THE BRICK BUILDING OF THE MOUNTAIN STATES POWER COMPANY, 38.5 FEET NORTH OF THE NORTH RAIL OF THE MAIN TRACK, 16.1 FEET SOUTH OF THE SOUTH RAIL OF A SIDE TRACK LEADING AROUND THE NORTH SIDE OF THE STATION, 3.4 FEET WEST OF THE SECOND TELEGRAPH POLE WEST OF THE STATION, A BENCH MARK DISK SET IN THE TOP OF A CONCRETE POST PROJECTING 3 INCHES ABOVE THE GROUND. THE ELEVATION USED IS 462.80 NAVD88.

PROJECT LOCATION VICINITY MAP

SITE AERIAL

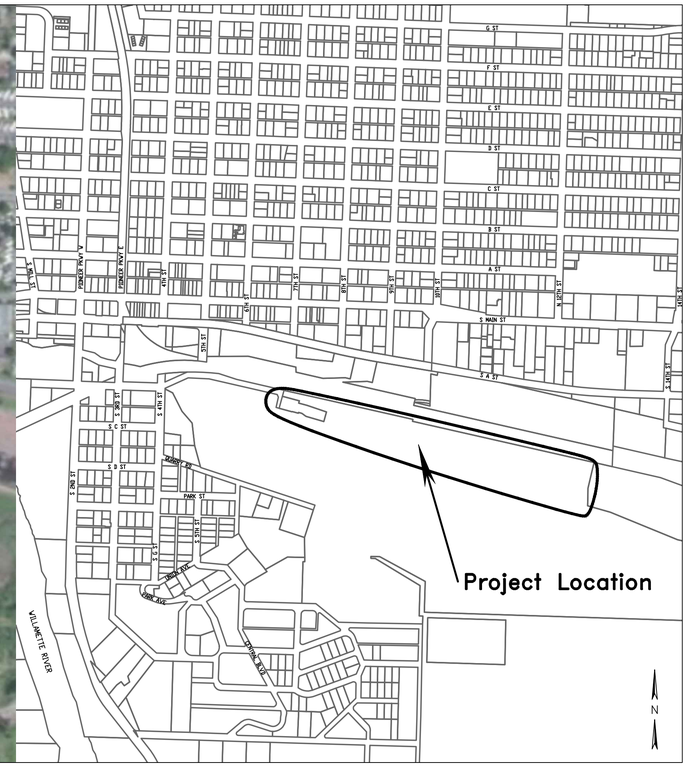

LOCATION MAP

PROJECT SITE MAP

POTENTIAL UNDERGROUND FACILITY OWNERS

DIG SAFELY

CALL THE OREGON ONE-CALL CENTER

1-800-332-2344

EMERGENCY TELEPHONE NUMBERS

NW NATURAL GAS	
M–F 7am–5pm	503–226–4211 EXT.4313
AFTER HOURS	503–226–4211
PGE	503–464–7777
QWEST	1–800–573–1311
VERIZON	1–800–483–1000

NOTICE TO EXCAVATORS:

ATTENTION: OREGON LAW REQUIRES YOU TO FOLLOW RULES ADOPTED BY THE OREGON UTILITY NOTIFICATION CENTER. THOSE RULES ARE SET FORTH IN OAR 952–001–0010 THROUGH OAR 952–001–0090. YOU MAY OBTAIN COPIES OF THE RULES BY CALLING THE CENTER.
(NOTE: THE TELEPHONE NUMBER FOR THE OREGON UTILITY NOTIFICATION CENTER IS (503)–232–1987).

REGISTERED PROFESSIONAL ENGINEER 80570PE OREGON JUNE 02, 2010 DANIEL E. SCHALL 6/5/15 EXP. 6/30/16

100% DESIGN
FINAL DESIGN
ISSUE FOR BID & CONSTRUCTION

PROJECT DESIGN OVERSIGHT APPROVAL BY:	JESSE JONES
CITY PROJECT ENGINEER	JUNE 10, 2015
BID DATE	P21052
PROJECT NO.	

THE CITY OF SPRINGFIELD DEVELOPMENT & PUBLIC WORKS
225 FIFTH STREET
SPRINGFIELD, OREGON 97477
VOICE: 541–726–3753
FAX: 541–726–3689
WWW.SPRINGFIELD–OR.GOV

THIS DRAWING IS FULL SIZE WHEN PLOTTED AT 22"x34".

Plotted by:MCARTHY, PATRICK on Friday, June 05, 2015 at 6:12:57 AM from file T1.dwg in folder
File Name:P:\work\12000\12200\12250\12251\dwg_100%_DESIGN\T1-C1 - 2 TITLE SHEET-GENERAL-NOTES_100%.DWG

GENERAL NOTES

1. THE INTENT OF THESE PLANS IS TO IMPROVE WATER QUALITY INTO THE MILL RACE FROM A 117 ACRE SUBBASIN THAT DISCHARGES VIA A 48" STORM PIPE. THE PROJECT ELEMENTS INCLUDE THE CONSTRUCTION OF A STORMWATER FACILITY (WET DETENTION POND) AND BIOSWALE. OTHER ELEMENTS INCLUDE THE BOOTH KELLY TRAILHEAD, PATH & BRIDGE CROSSING.

2. ALL CONSTRUCTION SHALL BE IN ACCORDANCE WITH THE CURRENT VERSION OF OREGON STANDARD SPECIFICATIONS FOR CONSTRUCTION AS UTILIZED BY APWA/ODOT INCLUDING ANY SUPPLEMENTAL SPECIFICATIONS, SPECIAL PROVISIONS, OR LOCAL AMENDMENTS BY THE CITY OF SPRINGFIELD, IF ANY.

3. OREGON LAW REQUIRES THE CONTRACTOR TO FOLLOW RULES ADOPTED BY THE OREGON UTILITY NOTIFICATION CENTER. THOSE RULES ARE SET FORTH IN OAR 952-001-0010 THROUGH OAR 952-001-0100. THE CONTRACTOR MAY OBTAIN COPIES OF THE RULES BY CALLING THE CENTER. NOTE: THE TELEPHONE NUMBER FOR THE OREGON UTILITY NOTIFICATION CENTER IS (800) 332-2344.

4. LOCATION AND/OR DEPTH OF EXISTING UTILITIES SHOWN ON PLANS ARE APPROXIMATE. ALL UTILITIES MAY NOT APPEAR ON PLANS. IT IS THE CONTRACTOR'S RESPONSIBILITY TO CONTACT ALL UTILITY COMPANIES FOR UNDERGROUND LOCATION OF FACILITIES AT LEAST 48 HOURS PRIOR TO EXCAVATING OR "POTHOLING". THE UTILITY "ONE-CALL" NUMBER IS (800) 332-2344 OR 811.

5. THE CONTRACTOR SHALL POTHOLE AND VERIFY LOCATIONS, ELEVATIONS, TYPES AND SIZES OF EXISTING UTILITIES PRIOR TO CONSTRUCTING NEW PIPING FAR ENOUGH IN ADVANCE TO ALLOW NECESSARY ADJUSTMENTS IN GRADE AND SHALL NOTIFY ENGINEER OF NEED TO ADJUST PIPING INSTALLATION ACCORDINGLY. POTHOLING SHALL SUFFICIENTLY PRECEDE LAYING OF PIPE TO ALLOW REQUIRED ELEVATION ADJUSTMENTS TO BE ACCOMPLISHED WITHOUT REWORK. ELEVATION ADJUSTMENTS SHALL BE EXPECTED AND ARE INCIDENTAL TO THE WORK.

6. CONTRACTOR SHALL BE RESPONSIBLE FOR COORDINATION WITH UTILITY COMPANIES ON THE TIMING OF INSTALLATION OF THE FACILITIES.

7. THE CONTRACTOR SHALL PROVIDE ALL TRAFFIC CONTROL DEVICES NECESSARY TO PROTECT AND SAFEGUARD THE PUBLIC AND WORKERS AGAINST INJURY AND PROTECT THE WORK AGAINST DAMAGE. ALL TEMPORARY TRAFFIC CONTROL SIGNING AND DEVICES SHALL BE IN PLACE PRIOR TO BEGINNING WORK. ALL TRAFFIC CONTROL SHALL CONFORM TO THE MANUAL ON UNIFORM TRAFFIC CONTROL DEVICES FOR STREETS AND HIGHWAYS (MUTCD), CURRENT EDITION, AS SUPPLEMENTED AND AMENDED BY THE OREGON SUPPLEMENTS. THE CONTRACTOR SHALL BE RESPONSIBLE FOR ANY REQUIRED TRAFFIC CONTROL AS FIELD CONDITIONS WARRANT. THE CONTRACTOR SHALL SUBMIT A TRAFFIC CONTROL PLAN TWO WEEKS PRIOR TO THE PRE-CONSTRUCTION CONFERENCE FOR CITY REVIEW AND APPROVAL.

8. ALL SANITARY AND STORM SEWER CONNECTIONS TO EXISTING CITY OWNED FACILITIES (PIPE, CATCH BASINS, MANHOLES, ETC.) SHALL BE INSPECTED BY THE CONTRACTOR AND THE CITY'S PUBLIC WORKS MAINTENANCE DEPARTMENT PRIOR TO HOOK UP. CONTACT MIKE RISLEY (541-726-3615) OR GENE ENOS (541-726-6062) NO LESS THAN 48 HOURS PRIOR TO DESIRED INSPECTION TIME.

9. WHERE CONNECTING TO AN EXISTING PIPE, THE CONTRACTOR SHALL EXPOSE THE END OF THE EXISTING PIPE AND ALLOW THE ENGINEER TO VERIFY EXACT LOCATION AND ELEVATION, CONDITION, AND POSITIVE FLOW BEFORE LAYING ANY NEW PIPE ON THAT SYSTEM.

10. THE SEWER GRADE SHALL BE PER THE PLANS, SPECIFICATIONS AND WITH THE MINIMUM COVER AS SHOWN ON THE PLANS.

11. ALL PVC SEWER PIPE 15-INCH DIAMETER AND SMALLER SHALL BE ASTM D3034. ALL PVC SEWER PIPE 18-INCH DIAMETER AND LARGER SHALL BE ASTM F679. PVC SEWER PIPE WITH LESS THAN 10 FEET OF COVER SHALL BE SDR 35/PS 46. PVC SEWER PIPE WITH COVER 10 FEET OR GREATER SHALL BE SDR26/PS 115, UNLESS OTHERWISE SHOWN ON THE PLANS.

12. CONTRACTOR TO SCHEDULE A PRE-PAVING MEETING TO BE HELD A MINIMUM OF 24 HOURS PRIOR TO PAVING.

13. ALL JOINTS BETWEEN EXISTING AND NEW ASPHALT PAVING SHALL BE SEALED WITH POLYMERIZED ASPHALT AND SANDED TO PREVENT PICK UP.

14. THE CONTRACTOR SHALL INTERNALLY TELEVISION INSPECT THE SEWER AFTER ALL BACKFILL AND BEFORE THE FINAL LIFT OF ASPHALT PAVING. THE CONTRACTOR SHALL SUPPLY THE CITY WITH A WRITTEN TV REPORT AND VIDEO DVD FOR CITY APPROVAL AT LEAST 2 WORKING DAYS BEFORE PAVING.

15. THIS PROJECT SHALL COMPLY WITH THE AMERICAN DISABILITIES ACT REQUIREMENTS SUCH AS INCORPORATION OF DESIGN CRITERIA FOR HANDICAP RAMPS, MAXIMUM PROFILE AND CROSS SECTION SLOPES FOR SIDEWALKS, UPGRADING EXISTING HANDICAP FACILITIES WHERE MAJOR CONSTRUCTION OCCURS.

16. ALL IMPROVEMENTS THAT WILL BE PRIVATELY OWNED AND MAINTAINED WILL BE BOUND BY THE CURRENT REQUIREMENTS OF THE STATE OF OREGON STRUCTURAL SPECIALTY CODE, PLUMBING SPECIALTY CODE, AND/OR CITY OF SPRINGFIELD BUILDING DIVISION REQUIREMENTS. CONTRACTOR IS RESPONSIBLE FOR OBTAINING APPLICABLE PERMITS FROM OTHER CITY DEPARTMENTS PRIOR TO DOING PRIVATE WORK.

17. A PRE-CONSTRUCTION CONFERENCE IS REQUIRED BEFORE START OF CONSTRUCTION. ALL UTILITIES, CONTRACTORS, AND CITY REPRESENTATIVES SHALL HAVE RECEIVED THE FINAL APPROVED PLANS AT LEAST 5 WORKING DAYS PRIOR TO THE PRE-CONSTRUCTION CONFERENCE.

18. THE ENGINEER AND/OR CITY HAVE THE RIGHT TO REQUIRE ADDITIONAL WORK NOT SHOWN HEREIN BUT NECESSARY FOR THE SUCCESSFUL COMPLETION OF THE PROJECT.

19. REQUESTS BY THE CONTRACTOR FOR CHANGES SHALL BE APPROVED BY THE ENGINEER AND THE CITY IN WRITING PRIOR TO IMPLEMENTATION.

20. CONTRACTOR SHALL COMPLY WITH ALL REQUIREMENTS OF ORS 757.541 TO 757.571. CONTRACTOR SHALL NOTIFY EACH UNDERGROUND UTILITY AT LEAST 48 BUSINESS-DAY HOURS, BUT NOT MORE THAN 10 BUSINESS DAYS, PRIOR TO EXCAVATING, BORING, OR POTHOLING.

21. INTERFERING PORTIONS OF UTILITIES THAT ARE ABANDONED IN PLACE SHALL BE REMOVED BY THE CONTRACTOR.

22. TO THE EXTENT NECESSARY TO ACCOMPLISH THE WORK. CONTRACTOR SHALL GROUT PLUG THE REMAINING EXPOSED ENDS OF ABANDONED UTILITIES, UNLESS OTHERWISE REQUIRED BY THE ENGINEER.

23. PRIOR TO CONSTRUCTION THE CONTRACTOR SHALL FLAG TREES PROPOSED FOR REMOVAL AS MAY BE REQUIRED TO FACILITATE THE CONTRACTORS OPERATIONS. CONTRACTOR SHALL OBTAIN ALL NECESSARY TREE REMOVAL PERMITS FROM THE CITY OF SPRINGFIELD, TREE REMOVAL WILL BE CONSIDERED INCIDENTAL TO CONSTRUCTION.

24. PRIOR TO CONSTRUCTION, PROTECT EXISTING TREES NOT DESIGNATED FOR REMOVAL FROM ALL CONSTRUCTION OPERATIONS. DO NOT PARK VEHICLES, STORE MATERIALS, FILL, OR OTHERWISE DISTURB THE AREA WITHIN THE DRIP LINE OF TREES TO BE PRESERVED.

25. THE CONTRACTOR IS RESPONSIBLE FOR ALL SEWAGE BY-PASS PUMPING AND/OR TEMPORARY DIVERSION CONNECTIONS NECESSARY FOR CONSTRUCTION.

26. MANHOLE RIMS AND ALL OTHER CASTINGS SHALL BE SET TO FINISHED GRADE PRIOR TO PAVING.

27. SPRINGFIELD CODE 10.2.1 REQUIRES NOTIFICATION OF OPEN TRENCHING FOR THE PROJECT TO ALLOW POSSIBLE AT&T CABLE INSTALLATION.

28. CONTRACTOR SHALL SUBMIT EVIDENCE OF INSURANCE TO THE CITY FOR APPROVAL PRIOR TO THE PRE-CONSTRUCTION CONFERENCE.

29. THE CONTRACTOR SHALL MAINTAIN A SET OF REDLINE PLANS ON THE PROJECT SITE AT ALL TIMES. CONTRACTOR SHALL NOTE ALL DEVIATIONS FROM THESE PLANS ON THIS REDLINE SET. AT THE END OF THE JOB THE CONTRACTOR SHALL PROVIDE ACCURATE "AS-BUILT" DRAWINGS. AS-BUILT DRAWINGS SHALL BE SUBMITTED TO THE ENGINEER AT COMPLETION OF PROJECT.

30. THE CONTRACTOR SHALL SUBMIT A PLAN FOR ENGINEER APPROVAL REGARDING THE CONTROL AND DIVERSION OF WATER. PORTIONS OF THIS PROJECT INCLUDE BOTH TEMPORARY AND PERMANENT FEATURES BELOW ORDINARY HIGH WATER (OHW). MILL RACE IS THE CENTRAL DRAINAGE FEATURE OF THIS PROJECT.

31. CONSTRUCT THIS PROJECT TO THE LIMITS, GRADES AND ELEVATIONS SHOWN ON THE DRAWINGS. ANY DEVIATION MUST BE APPROVED BY THE ENGINEER PRIOR TO IMPLEMENTATION. INFORM THE ENGINEER OF ANY DISCREPANCIES DISCOVERED IMMEDIATELY.

32. PROVIDE THE NECESSARY EQUIPMENT, MATERIAL AND PERSONNEL TO COMPLETE THE WORK AS SHOWN ON THESE DRAWINGS. UTILIZE NEW OR WELL MAINTAINED EQUIPMENT THAT MEETS EPA'S TIER III OR IV STANDARDS.

33. THE CONTRACTOR WILL COMPLY WITH ALL REQUIREMENTS OF THE VARIOUS APPLICABLE SAFETY CODES (E.G. OSHA) AND PERMITS ISSUED FOR THIS PROJECT. COMPLETE COPIES OF ENVIRONMENTAL PERMITS ISSUED FOR THIS PROJECT ARE INCLUDED IN THE BID DOCUMENTS. (SEE PERMIT INFORMATION)

34. THE ENGINEER SHALL MAKE THE DRAWING FILES AVAILABLE TO THE CONTRACTOR'S SURVEYOR (AUTOCAD FORMAT) FOR PURPOSES OF DEVELOPING A STAKING PLAN. THE CONTRACTOR WILL BE RESPONSIBLE FOR ENSURING THAT CONSTRUCTION STAKING FAITHFULLY REPRODUCES THE ENGINEER'S DESIGN ON THE GROUND. SEE THE SPECIAL PROVISIONS SECTION 00150 - CONTROL OF WORK FOR MORE INFORMATION.

35. MATERIALS REMOVED FROM THE SITE SHALL BE PROPERLY DISPOSED OF IN ACCORDANCE WITH ALL LOCAL, STATE AND FEDERAL RULES.

36. CONTRACTOR IS RESPONSIBLE TO OBTAIN APPLICABLE PERMITS FROM OTHER AGENCIES WITH JURISDICTIONS SUCH AS LANE COUNTY, OREGON DEPARTMENT OF TRANSPORTATION, OR THE DEPARTMENT OF ENVIRONMENTAL QUALITY.

37. EARTHWORK OUTSIDE THE RIGHT OF WAY AND PUBLIC EASEMENTS IN EXCESS OF 50 CUBIC YARDS REQUIRES A LAND AND DRAINAGE ALTERATION PERMIT (LDAP), WHICH WILL BE PROVIDED BY THE CITY.

38. THE CONTRACTOR SHALL SUBMIT A DEWATERING PLAN FOR ENGINEER APPROVAL PRIOR TO START OF CONSTRUCTION.

39. CONTRACTOR TO PROVIDE HAUL ROUTE MAP FOR APPROVAL PRIOR TO WORK COMMENCING.

PERMIT INFORMATION

1. DEPARTMENT OF STATE LANDS PERMIT NO. 57082-RF. CONTRACTOR SHALL ADHERE TO THE PERMIT AND CONDITIONS.

2. UNITED STATES ARMY CORP OF ENGINEERS (USACE) PERMIT NO. NWP-2013-438/1. CONTRACTOR SHALL ADHERE TO THE PERMIT AND CONDITIONS.

3. UNION PACIFIC RAILROAD ENCROACHMENT APPLICATION - IN PROGRESS.

4. THE CITY WILL PAY FOR AND PROVIDE APPLICABLE BUILDING PERMITS.

ABBREVIATIONS

@	AT
&	AND
ABV	ABOVE
ADJ	ADJACENT
ADJUST	ADJUSTABLE
APWA	AMERICAN PUBLIC WORKS ASSOCIATION
BETW, BTWN	BETWEEN
BEY'D	BEYOND
BLW	BELOW
BOT	BOTTOM
CIP	CAST-IN-PLACE
CL	CENTERLINE
CMP	CORRUGATED METAL PIPE
CONC	CONCRETE
CONT	CONTINUOUS
COORD	COORDINATE
CPP	CORRUGATED PLASTIC PIPE
DET	DETAIL
DIA	DIAMETER
DBH	DIAMETER AT BREAST HEIGHT
DWG	DRAWING
EA	EACH
ELEC	ELECTRICAL
EMBT	EMBEDMENT
ENG'R	ENGINEER
EL, ELEV	ELEVATION
EQ	EQUAL
EXTG	EXISTING
FDN	FOUNDATION
FFE	FINISH FLOOR ELEVATION
FIN	FINISH
FLR	FLOOR
FT	FEET
FTG	FOOTING
GA	GAUGE
GALV	GALVANIZED
GC	GENERAL CONTRACTOR
HDPE	HIGH DENSITY POLYETHYLENE
HGT	HEIGHT
HGT	HOT MIX ASPHALTIC CONCRETE
HORIZ	HORIZONTAL
HSS	HOLLOW STRUCTURAL SECTIONS
IE	INVERT ELEVATION
IN.	INCH
IR	IRRIGATION
MANUF	MANUFACTURED
MAT'L	MATERIAL
MAX	MAXIMUM
MIN	MINIMUM
MH	MANHOLE
MISC	MISCELLANEOUS
M.L.	MAIN LINE
NA	NOT AVAILABLE
NG	NATURAL GRADE
NOM	NOMINAL
NMFS	NATIONAL MARINE FISHERIES SERVICE
NTS	NOT TO SCALE
NO	NUMBER
OA	OVERALL
OC	ON CENTER
OD	OUTSIDE DIAMETER
ODOT	OREGON DEPARTMENT OF TRANSPORTATION
OHP	OVERHEAD POWER
OHW	ORDINARY HIGH WATER
OPP	OPPOSITE
OSHA	OCCUPATIONAL SAFETY AND HEALTH ADMINISTRATION
PCC	PORTLAND CEMENT CONCRETE
PL	PLATE
PREFAB	PREFABRICATED
QTY	QUANTITY
RAD, R	RADIUS
REQ'D	REQUIRED
ROW	RIGHT OF WAY
RR	RAILROAD
SCH	SCHEDULE
SCH'ED	SCHEDULED
SD	STORM SEWER
SHT	SHEET
SIM	SIMILAR
SPEC'D	SPECIFIED
SPECS	SPECIFICATIONS
SS	SANITARY SEWER
SSTL	STAINLESS STEEL
STL	STEEL
STM	STORM SEWER
STRUCT	STRUCTURAL
SUB	SPRINGFIELD UTILITY BOARD
SURF	SURFACE
T&B	TOP AND BOTTOM
TBD	TO BE DETERMINED
THK	THICK/THICKNESS
TOP	TOP OF FOOTING ELEV.
TOW	TOP OF WALL ELEV.
TYP	TYPICAL
UON	UNLESS OTHERWISE NOTED
VERT	VERTICAL
VIF	VERIFY IN FIELD
W/	WITH
W/O	WITHOUT
WQ	WATER QUALITY

SECTION AND DETAIL DESIGNATIONS

SECTION DESIGNATIONS

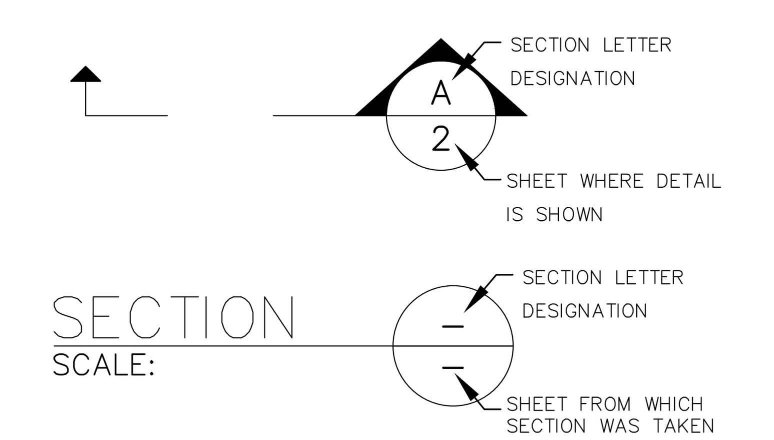

DETAIL DESIGNATIONS

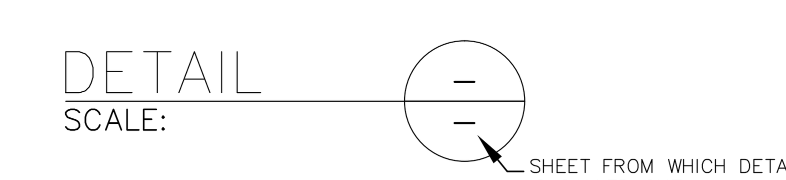

100% DESIGN
FINAL DESIGN
ISSUE FOR BID & CONSTRUCTION

REGISTERED PROFESSIONAL ENGINEER 80570PE OREGON JUNE 02, 2010 DANIEL E. SCHALL 6/5/15
EXP: 6/30/16

willamalane Park and Recreation District

LANDSCAPE ARCHITECTS SCHIRMER SATRE GROUP

Revisions and Addendums			
Description	Date	No.	By
60% DESIGN	4/7/14	1	DS
REVISED 60% DESIGN	9/19/14	2	DS
90% DESIGN	12/12/14	3	DS
DRAFT 100% DESIGN	5/15/15	5	DS
FINAL 100% DESIGN	6/5/15	6	DS

amec foster wheeler

THE CITY OF SPRINGFIELD
DEVELOPMENT & PUBLIC WORKS
225 FIFTH STREET
SPRINGFIELD, OREGON 97477
VOICE: 541-726-3753
FAX: 541-726-3689
WWW.SPRINGFIELD-OR.GOV

DESIGN: DS | DRAWN: PM | CHECK: HM | PROJ. NO: P21052 | BID ON: 6/10/15

SPRINGFIELD MILL RACE STORMWATER FACILITY, BOOTH KELLY TRAILHEAD & MILL RACE PATH
NOTES, SYMBOLS, AND ABBREVIATIONS

SHEET C-1

THIS DRAWING IS FULL SIZE WHEN PLOTTED AT 22"x34".

Plotted by:MCCARTHY, PATRICK on Friday, June 05, 2015 at 6:14:03 AM from the C1 layout tab
File Name/Path:K:\12000\12700\12790\127901\DWG_100%_DESIGN\T1-C1 - TITLE SHEET-GENERAL_NOTES_100%.DWG

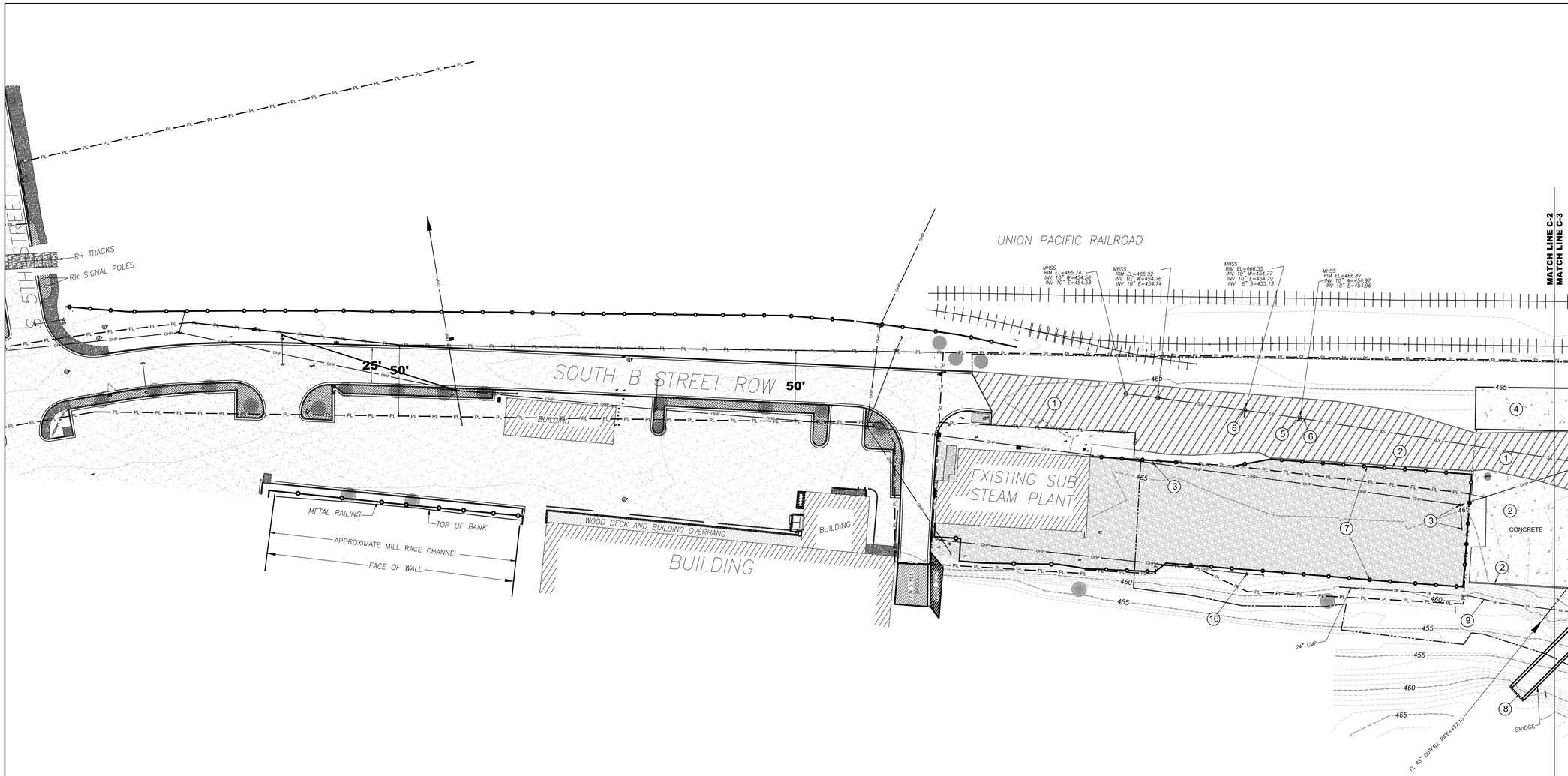

LEGEND

- STORM SEWER MANHOLE
- SANITARY SEWER MANHOLE
- AREA DRAIN
- UTILITY POLE
- GUY-WIRE ANCHOR
- CONCRETE VAULT
- TREE
- RAILROAD TRACKS
- FENCE
- OHP — OVERHEAD POWER LINES
- GUY-WIRE
- SD — EXISTING STORM SEWER
- SS — EXISTING SANITARY SEWER
- EXISTING MAJOR CONTOUR
- EXISTING MINOR CONTOUR
- LIMITS OF CONSTRUCTION
- PL — PROPERTY BOUNDARY
- BOULDER PILE
- LOG PILE
- CONCRETE PILE
- LOG AND CONCRETE PILE
- GRAVEL ACCESS ROAD
- ASPHALT
- CONCRETE
- ASPHALT REMOVAL

SITE PLAN NOTES

1. REMOVE ALL EXISTING ASPHALT WITHIN LIMITS OF CONSTRUCTION.
2. REMOVE ALL EXISTING CONCRETE AND CONCRETE WALL.
3. OHP POLES & GUYS TO BE REMOVED AND RELOCATED BY OTHERS (SUB).
4. REMOVE CONCRETE LOADING DOCK & RECYCLE CONCRETE.
5. REMOVE EXISTING SSMH. CONFIRM NO LATERAL.
6. PLUG UPSTREAM AND/OR DOWNSTREAM SS PIPE WITH GROUT, ABANDON PIPE IN PLACE. REMOVE PIPE IF INTERFERES WITH NEW SS PIPE. SEE NOTE 4, SHEET C-5.
7. REMOVE FENCE AND GATE WITHIN LIMITS OF WORK, RE-USE, SEE NOTES 1 &2 ON SHEET C-5.
8. PROTECT EXISTING BRIDGE AND ABUTMENTS.
9. REMOVE 24" CMP WITHIN EXCAVATION LIMITS, APPROX. 100 FEET.
10. OVERHEAD LIGHT, POLE AND GUY WIRE TO BE REMOVED, INCLUDING REMOVING ELECTRICAL WIRING TO THE POLE TO THE WEST.

REGISTERED PROFESSIONAL ENGINEER 80570PE OREGON JUNE 02, 2010 DANIEL E. SCHALL 6/5/15
EXP. 6/30/16

SCALE: 1" = 40'
40' 20' 0 40'

100% DESIGN
FINAL DESIGN
ISSUE FOR BID & CONSTRUCTION

NOTE:

1. SURVEY OF EXISTING CONDITIONS PROVIDED BY THE CITY OF SPRINGFIELD, P21052 Mill Race Stormwater Facility REVISION 10 102114.dwg, DATED OCTOBER, 2014.

willamalane Park and Recreation District

LANDSCAPE ARCHITECTS SCHIRMER SATRE GROUP

Revisions and Addendums			
Description	Date	No.	By
60% DESIGN	4/7/14	1	DS
REVISED 60% DESIGN	9/19/14	2	DS
90% DESIGN	12/12/14	3	DS
DRAFT 100% DESIGN	5/15/15	4	DS
FINAL 100% DESIGN	6/5/15	5	DS

amec foster wheeler

SPRINGFIELD OREGON

THE CITY OF SPRINGFIELD
DEVELOPMENT & PUBLIC WORKS
225 FIFTH STREET
SPRINGFIELD, OREGON 97477
VOICE: 541-726-3753
FAX: 541-726-3689
WWW.SPRINGFIELD-OR.GOV

DESIGN: DS | DRAWN: PM | CHECK: HM | PROJ. NO: P21052 | BID ON: 6/10/15

SPRINGFIELD MILL RACE STORMWATER FACILITY, BOOTH KELLY TRAILHEAD & MILL RACE PATH
EXISTING TOPOGRAPHIC SURVEY & DEMO - WEST

SHEET C-2

THIS DRAWING IS FULL SIZE WHEN PLOTTED AT 22"x34".

Plotted by:MCCARTHY, PATRICK on Friday, June 05, 2015 at 6:27:43 AM from the C-2 layout tab
File name:P:\Work\12000\12700\12701\DWG_100B_DESIGN\12-C-4 - EXISTING TOPOGRAPHIC SURVEY(_100B.DWG

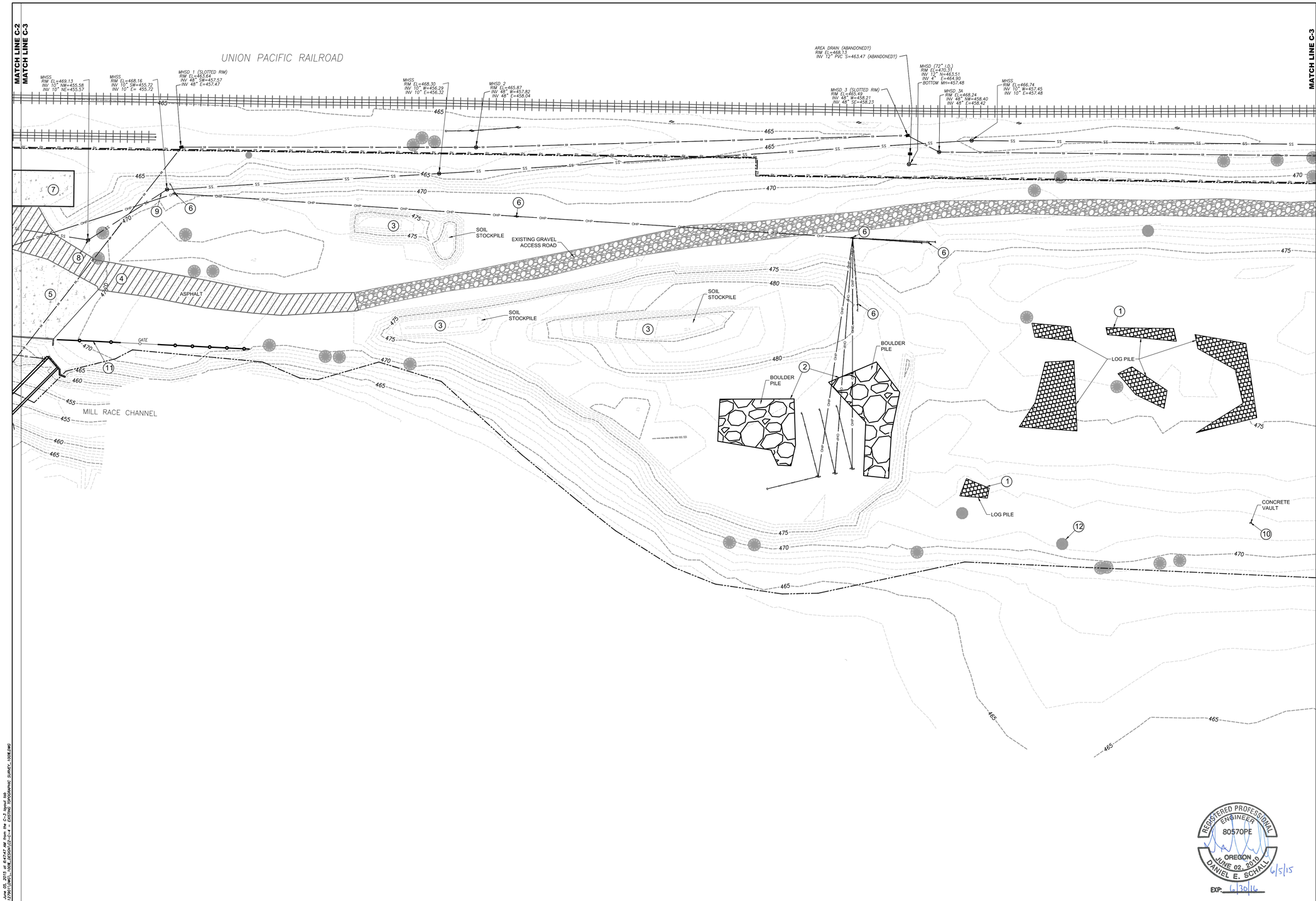

LEGEND

- STORM SEWER MANHOLE
- SANITARY SEWER MANHOLE
- AREA DRAIN
- UTILITY POLE
- GUY-WIRE ANCHOR
- CONCRETE VAULT
- TREE
- RAILROAD TRACKS
- FENCE
- OHP — OVERHEAD POWER LINES
- GUY-WIRE
- SD — EXISTING STORM SEWER
- SS — EXISTING SANITARY SEWER
- EXISTING MAJOR CONTOUR
- EXISTING MINOR CONTOUR
- LIMITS OF CONSTRUCTION
- PL — PROPERTY BOUNDARY
- BOULDER PILE
- LOG PILE
- CONCRETE PILE
- LOG AND CONCRETE PILE
- GRAVEL ACCESS ROAD
- ASPHALT
- CONCRETE
- ASPHALT REMOVAL

SITE PLAN NOTES

1. REMOVE & DISPOSE OF LOG PILES OFF-SITE.
2. REMOVE & RE-USE BOULDERS. REFERENCE TRAILHEAD DRAWINGS FOR RE-USE OF BOULDERS AND QTY. DISPOSE REMAINING BOULDERS OFF-SITE.
3. REMOVE & DISPOSE OF SOIL STOCKPILES OFF-SITE.
4. REMOVE ALL EXISTING ASPHALT WITHIN LIMITS OF CONSTRUCTION.
5. REMOVE ALL EXISTING CONCRETE.
6. OHP POLES & GUYS TO BE REMOVED AND RELOCATED BY OTHERS (SUB).
7. REMOVE CONCRETE LOADING DOCK & RECYCLE CONCRETE.
8. REMOVE EXISTING SSMH, PLUG UPSTREAM AND DOWNSTREAM SS PIPE WITH GROUT, ABANDON PIPE IN PLACE. SEE DETAIL K, SHEET C-12.
9. PLUG DOWNSTREAM SS PIPE WITH CONCRETE OF GROUT PLUG. ABANDON PIPE IN PLACE. SEE DETAIL K, SHEET C-12.
10. REMOVE CONCRETE VAULT AND PIPING WITHIN GRADING LIMITS. PIPING NOT REMOVED SHALL HAVE ENDS PLUGGED WITH GROUT. SEE DETAIL K, SHEET C-12.
11. FENCE TO REMAIN TO BLOCK OFF ACCESS TO EXISTING BRIDGE. FENCE MAY NEED TO BE RELOCATED TO PREVENT ACCESS TO EXISTING BRIDGE, OR IF CANNOT BE RE-USED, INSTALL NEW FENCE AND POSTS.
12. REFERENCE LANDSCAPE SHEETS FOR TREE REMOVAL AND TREE PROTECTION.

REGISTERED PROFESSIONAL ENGINEER 80570PE OREGON JUNE 02, 2010 DANIEL E. SCHALL
6/5/15
EXP: 6/30/16

SCALE: 1" = 40'
40' 20' 0 40'
N

100% DESIGN
FINAL DESIGN
ISSUE FOR BID & CONSTRUCTION

NOTE:

1. SURVEY OF EXISTING CONDITIONS PROVIDED BY THE CITY OF SPRINGFIELD, P21052 Mill Race Stormwater Facility REVISION 10 102114.dwg, DATED OCTOBER, 2014.

willamalane Park and Recreation District

LANDSCAPE ARCHITECTS SCHIRMER SATRE GROUP

Revisions and Addendums

Description	Date	No.	By
60% DESIGN	4/7/14	1	DS
REVISED 60% DESIGN	9/19/14	2	DS
90% DESIGN	12/12/14	3	DS
DRAFT 100% DESIGN	5/15/15	4	DS
FINAL 100% DESIGN	6/5/15	5	DS

amec foster wheeler

SPRINGFIELD OREGON

THE CITY OF SPRINGFIELD
DEVELOPMENT & PUBLIC WORKS
225 FIFTH STREET
SPRINGFIELD, OREGON 97477
VOICE: 541-726-3753
FAX: 541-726-3689
WWW.SPRINGFIELD-OR.GOV

DESIGN: DS | DRAWN: PM | CHECK: HM | PROJ. NO: P21052 | BID ON: 6/10/15

SPRINGFIELD MILL RACE STORMWATER FACILITY, BOOTH KELLY TRAILHEAD & MILL RACE PATH
EXISTING TOPOGRAPHIC SURVEY & DEMO - CENTRAL

THIS DRAWING IS FULL SIZE WHEN PLOTTED AT 22"x34".

Plotted by:HCARVIN, PATRICK on Friday, June 05, 2015 at 8:47:47 AM from the C-3 layout tab
File Name:P:\work\12000\12200\12250\12250\12250\1\DWG_CIVIL_DESIGN\C2-C-4 - EXISTING TOPOGRAPHIC SURVEY_1005.DWG

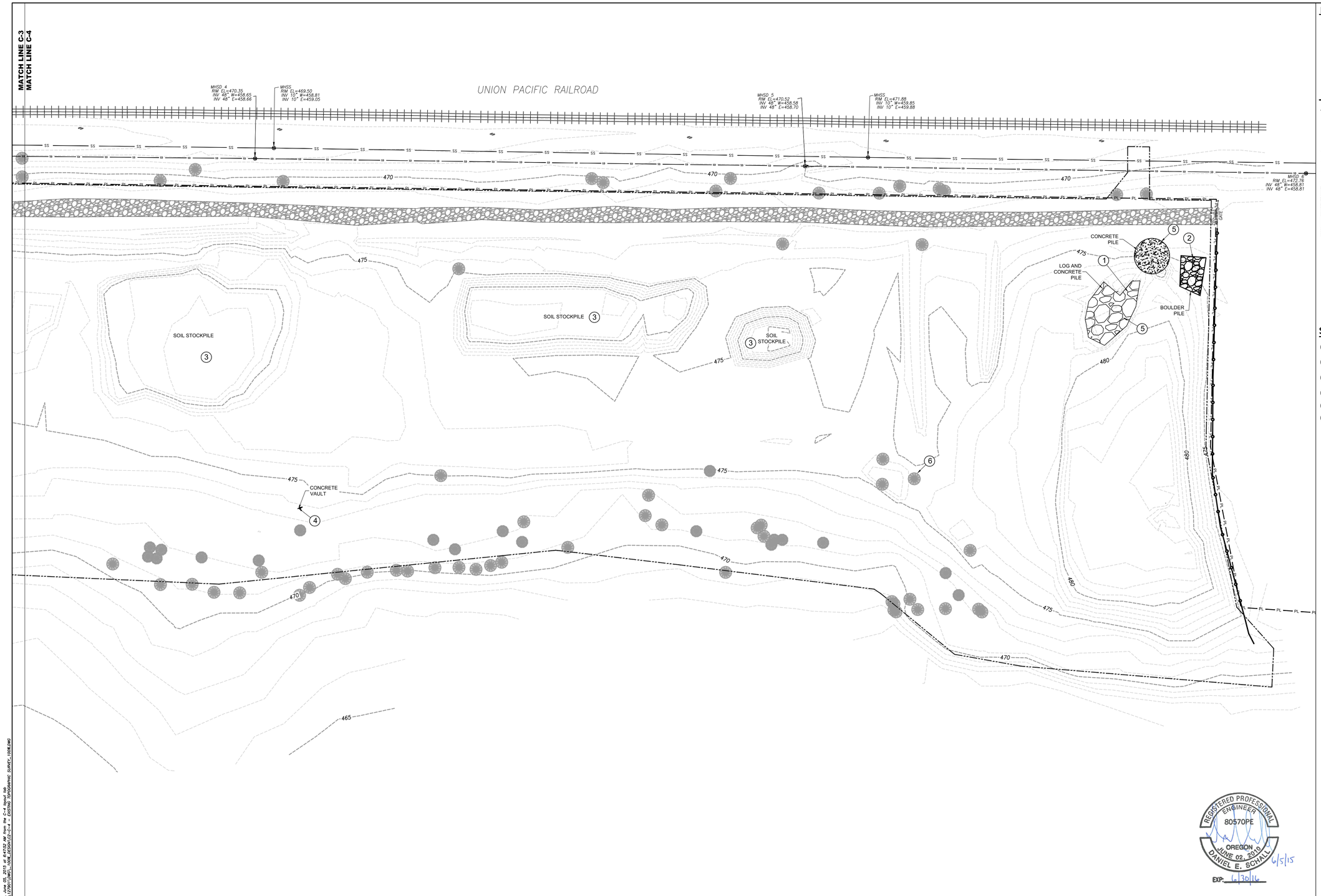

LEGEND

- STORM SEWER MANHOLE
- SANITARY SEWER MANHOLE
- AREA DRAIN
- UTILITY POLE
- GUY-WIRE ANCHOR
- CONCRETE VAULT
- TREE
- RAILROAD TRACKS
- FENCE
- OHP — OVERHEAD POWER LINES
- GUY-WIRE
- SD — EXISTING STORM SEWER
- SS — EXISTING SANITARY SEWER
- EXISTING MAJOR CONTOUR
- EXISTING MINOR CONTOUR
- LIMITS OF CONSTRUCTION
- PL — PROPERTY BOUNDARY
- BOULDER PILE
- LOG PILE
- CONCRETE PILE
- LOG AND CONCRETE PILE
- GRAVEL ACCESS ROAD

SITE PLAN NOTES

1. REMOVE & DISPOSE OF LOG PILES OFF-SITE.
2. REMOVE & RE-USE BOULDERS. REFERENCE TRAILHEAD DRAWINGS FOR RE-USE OF BOULDERS AND QTY. DISPOSE REMAINING BOULDERS OFF-SITE.
3. REMOVE & DISPOSE OF SOIL STOCKPILES OFF-SITE.
4. REMOVE CONCRETE VAULTS AND PIPING WITHIN GRADING LIMITS. PIPING NOT REMOVED SHALL HAVE ENDS PLUGGED WITH GROUT. SEE DETAIL K, SHEET C-12.
5. REMOVE & DISPOSE OF CONCRETE PILES OFF-SITE.
6. REFERENCE LANDSCAPE SHEETS FOR TREE REMOVAL AND PROTECTION.

REGISTERED PROFESSIONAL ENGINEER 80570PE OREGON JUNE 02, 2010 DANIEL E. SCHALL 6/5/15
EXP: 6/30/16

SCALE: 1" = 40'
40' 20' 0 40'
N

100% DESIGN
FINAL DESIGN
ISSUE FOR BID & CONSTRUCTION

NOTE:

1. SURVEY OF EXISTING CONDITIONS PROVIDED BY THE CITY OF SPRINGFIELD, P21052 Mill Race Stormwater Facility REVISION 10 102114.dwg, DATED OCTOBER, 2014.

willamalane Park and Recreation District

LANDSCAPE ARCHITECTS SCHIRMER SATRE GROUP

Revisions and Addendums

Description	Date	No.	By
60% DESIGN	4/7/14	1	DS
REVISED 60% DEISGN	9/19/14	2	DS
90% DESIGN	12/12/14	3	DS
DRAFT 100% DESIGN	5/15/15	4	DS
FINAL 100% DESIGN	6/5/15	5	DS

amec foster wheeler

SPRINGFIELD OREGON

THE CITY OF SPRINGFIELD
DEVELOPMENT & PUBLIC WORKS
225 FIFTH STREET
SPRINGFIELD, OREGON 97477
VOICE: 541-726-3753
FAX: 541-726-3689
WWW.SPRINGFIELD-OR.GOV

DESIGN: DS | DRAWN: PM | CHECK: HM | PROJ. NO: P21052 | BID ON: 6/10/15

SPRINGFIELD MILL RACE STORMWATER FACILITY, BOOTH KELLY TRAILHEAD & MILL RACE PATH
EXISTING TOPOGRAPHIC SURVEY & DEMO - EAST

THIS DRAWING IS FULL SIZE WHEN PLOTTED AT 22"x34".

Plotted by:MCCARTHY, PATRICK on Friday, June 05, 2015 at 6:47:52 AM from the C-4 layout tab
File: J:\amec\Projects\12000\12300\12301\DWG_1-SDE_DESIGN\12-C-4 - EXISTING TOPOGRAPHIC SURVEY_1-SDE.DWG

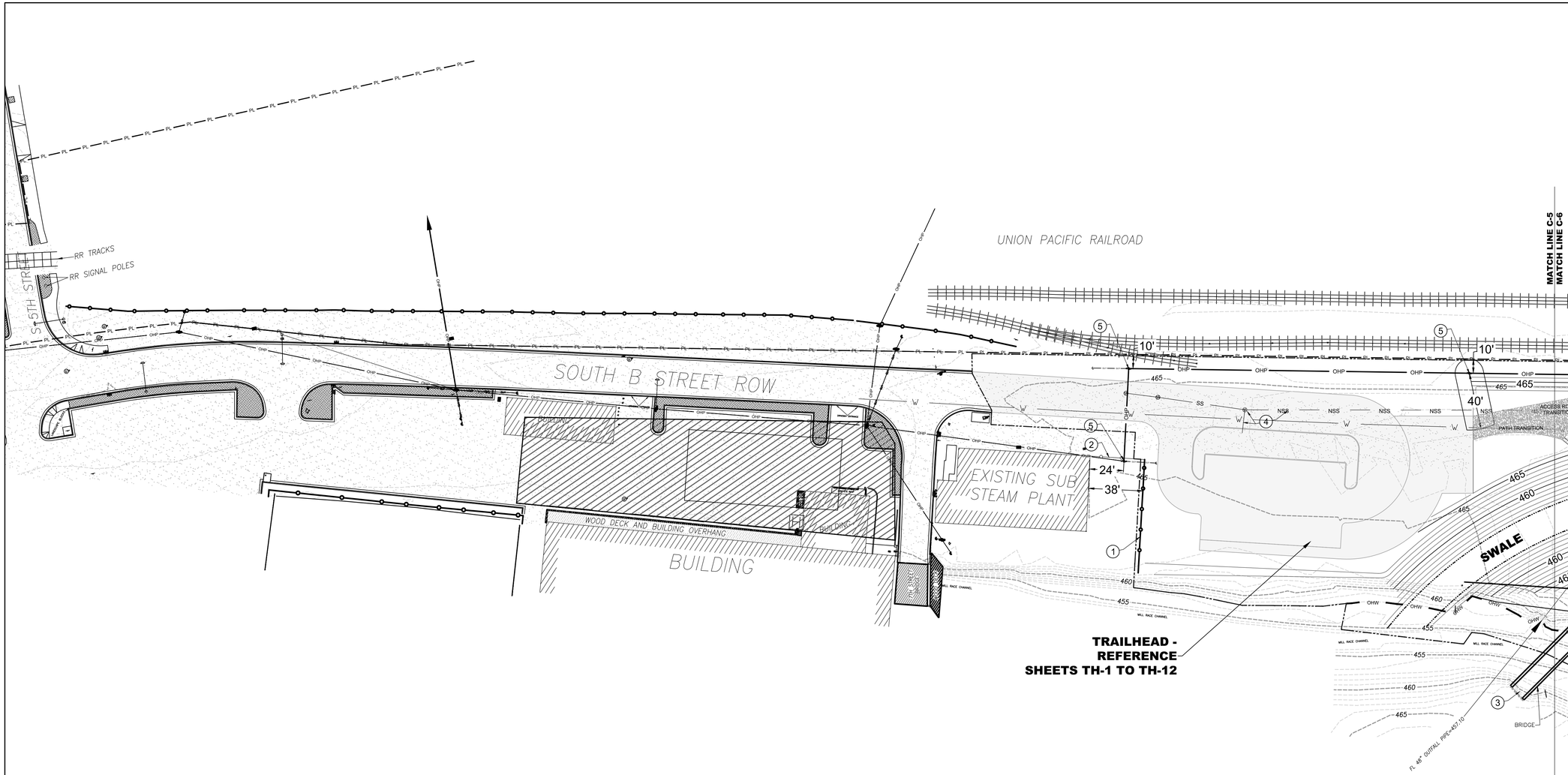

LEGEND

- STORM SEWER MANHOLE
- SANITARY SEWER MANHOLE
- AREA DRAIN
- UTILITY POLE
- GUY-WIRE ANCHOR
- CONSTRUCTION NOTES
- RAILROAD TRACKS
- FENCE
- OHP — OVERHEAD POWER LINES
- PROPOSED ELECTRIC CONDUIT
- GUY-WIRE
- SD — EXISTING STORM SEWER
- SS — EXISTING SANITARY SEWER
- NSS — NEW SANITARY SEWER
- EXISTING MAJOR CONTOUR
- EXISTING MINOR CONTOUR
- PROPOSED MAJOR CONTOUR
- PROPOSED MINOR CONTOUR
- W — PROPOSED FUTURE SUB WATERLINE
- LIMITS OF CONSTRUCTION
- OHW — ORDINARY HIGH WATER
- PL — PROPERTY BOUNDARY
- BUFFER AROUND UTILITY POLES AND GUY-WIRES
- 20' WIDE SWALE
- MILL RACE PATH
- ASPHALT TRANSITION

SITE PLAN NOTES

1. INSTALL FENCE, RE-USE FENCE REMOVED ON SHEET C-2. IF CANNOT BE RE-USED INSTALL NEW FENCE & POSTS.
2. INSTALL GATE, RE-USE GATE REMOVED ON SHEET C-2. IF CANNOT BE RE-USED INSTALL NEW GATE & POSTS.
3. EXISTING BRIDGE TO REMAIN. PROTECT EXISTING BRIDGE ABUTMENTS.
4. INSTALL ~340' OF NEW PVC SCH 3034 10" SS LINE AND NEW MANHOLE. CONFIRM LOCATION OF LATERAL TO SUB BUILDING.
5. RELOCATED OVERHEAD POWER POLE AND GUYS BY OTHERS (SUB).

REGISTERED PROFESSIONAL ENGINEER 80570PE OREGON JUNE 02, 2010 DANIEL E. SCHALL
6/5/15
EXP: 6/30/16

SCALE: 1" = 40'
40' 20' 0 40'

N

100% DESIGN
FINAL DESIGN
ISSUE FOR BID & CONSTRUCTION

NOTE:

1. SURVEY OF EXISTING CONDITIONS PROVIDED BY THE CITY OF SPRINGFIELD, P21052 Mill Race Stormwater Facility REVISION 10 102114.dwg, DATED OCTOBER, 2014.

willamalane Park and Recreation District

LANDSCAPE ARCHITECTS SCHIRMER SATRE GROUP

Revisions and Addendums

Description	Date	No.	By
60% DESIGN	4/7/14	1	DS
REVISED 60% DESIGN	9/12/14	2	DS
90% DESIGN	12/12/14	3	DS
DRAFT 100% DESISGN	5/15/15	4	DS
FINAL 1005 DESIGN	6/5/15	5	DS

amec foster wheeler

SPRINGFIELD OREGON

THE CITY OF SPRINGFIELD
DEVELOPMENT & PUBLIC WORKS
225 FIFTH STREET
SPRINGFIELD, OREGON 97477
VOICE: 541-726-3753
FAX: 541-726-3689
WWW.SPRINGFIELD-OR.GOV

DESIGN: DS | DRAWN: PM | CHECK: HM | PROJ. NO: P21052 | BID ON: 6/10/15

SPRINGFIELD MILL RACE STORMWATER FACILITY, BOOTH KELLY TRAILHEAD & MILL RACE PATH

PROPOSED SITE PLAN - WEST

THIS DRAWING IS FULL SIZE WHEN PLOTTED AT 22"x34".

Plotted by:MCARTHY, PATRICK on Friday, June 05, 2015 at 6:44:18 AM from the C-3 layout tab
File: Home:Projects\12260\12260\12260\12260\Sheets_Wide_Edition\C5-C7 - PROPOSED SITE PLAN_1006.DWG

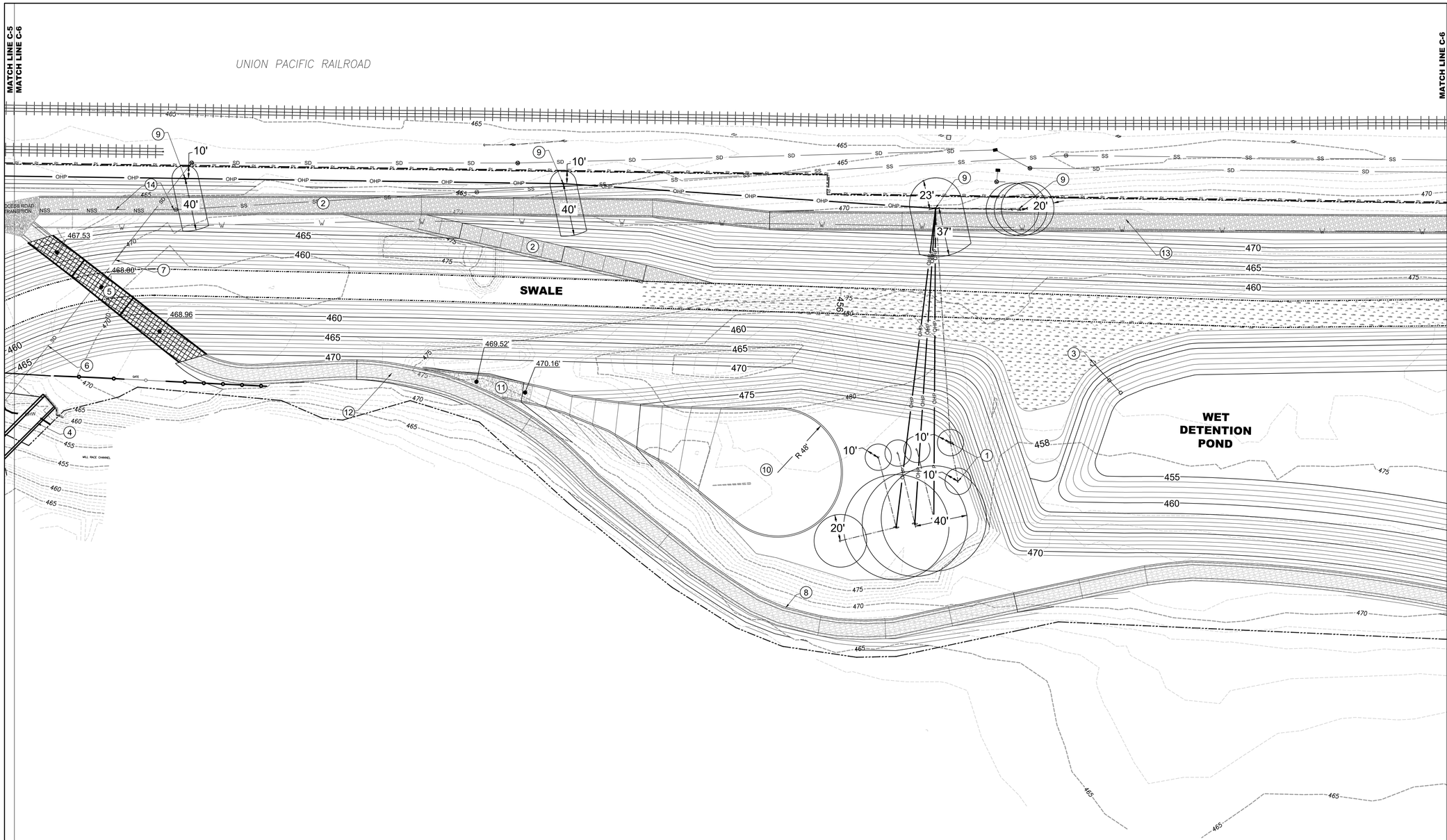

LEGEND

- STORM SEWER MANHOLE
- SANITARY SEWER MANHOLE
- AREA DRAIN
- UTILITY POLE
- GUY-WIRE ANCHOR
- CONSTRUCTION NOTES
- RAILROAD TRACKS
- FENCE
- OHP — OVERHEAD POWER LINES
- PROPOSED ELECTRIC CONDUIT
- GUY-WIRE
- SD — STORM SEWER
- SS — SANITARY SEWER
- NSS — NEW SANITARY SEWER LINE
- EXISTING MAJOR CONTOUR
- EXISTING MINOR CONTOUR
- PROPOSED MAJOR CONTOUR
- PROPOSED MINOR CONTOUR
- W — PROPOSED FUTURE SUB WATERLINE
- OHW — ORDINARY HIGH WATER
- LIMITS OF CONSTRUCTION
- PL — PROPERTY BOUNDARY
- BUFFER AROUND UTILITY POLES AND GUY-WIRES
- 20' WIDE SWALE
- MILL RACE PATH
- DRIVABLE GRASS PAVER
- CONSPAN BRIDGE
- ASPHALT TRANSITION
- ACCESS ROAD

SITE PLAN NOTES

1. APPROXIMATE LOCATION OF NEW STUB POLE AND GUY-WIRE. WORK TO BE PERFORMED BY SPRINGFIELD UTILITY BOARD (SUB). CONTRACTOR TO VERIFY ACTUAL LOCATION.
2. NEW ACCESS ROAD. 12' WIDE WITH 1' WIDE GRAVEL SHOULDERS. 6", 3/4" MINUS OVER 12", 1-1/2" MINUS CRUSHED ROCK, SEE DETAIL B, SHEET C-12.
3. FLOW CONTROL ORIFICE MANHOLE, INLET, AND HDPE DISCHARGE PIPE. I.E. IN 456.59', I.E. OUT 456.26', ORIFICE 5.76" DIAMETER. SEE DETAILS A, F, AND G, SHEET C-12.
4. PROTECT EXISTING BRIDGE AND ABUTMENTS.
5. CONTECH CONSPAN BRIDGE, SEE DETAIL ON SHEETS C-18, C-19, C-20, AND C-21.
6. REMOVE EXISTING 48" CPP STORM PIPE, ~140'.
7. CUT 48" BYPASS PIPE AT SWALE TO MAINTAIN DRAINAGE OF RR PROPERTY AND FOR MAINTENANCE BYPASS, PROVIDE RIPRAP SPLASH PAD AT NEW OUTFALL. INVERT APPROXIMATELY 457.35'. SEE DETAIL B, SHEET C-13.
8. INSTALL 2" ELECTRICAL SCH 40 PVC CONDUIT ALONG ENTIRE LENGTH OF PATH SHOULDER FOR FUTURE USE. APPROXIMATE LENGTH 2,226 FEET. ALIGNMENT TO FOLLOW IRRIGATION PIPING ALIGNMENT. REFERENCE DETAIL C, SHEET C-12 AND SHEETS L-1, L-2, AND L-3.
9. RELOCATED OVERHEAD POWER POLE BY OTHERS (SUB), INCLUDING GUYS.
10. GRAVEL ACCESS ROAD AND TURN AROUND TO SUB 3-POLE STRUCTURE, SEE DETAIL B, SHEET C-12. SAME DETAIL AS ACCESS ROAD.
11. 20' PATH ASPHALT TRANSITION, SEE MILL RACE PATH DETAIL C, SHEET C-12 FOR ASPHALT DETAIL. ONLY 1-FOOT AGGREGATE SHOULDERS.
12. MILL RACE PATH, SEE DETAIL C SHEET C-12.
13. NEW 24" WATERLINE INSTALLED BY OTHERS (SUB).
14. INSTALL ~ 340' OF NEW 10" PVC SCH 3034 SS LINE AND NEW MANHOLE.

REGISTERED PROFESSIONAL ENGINEER 80570PE OREGON JUNE 02, 2010 DANIEL E. SCHALL 6/5/15 EXP: 6/30/16

SCALE: 1" = 40'

100% DESIGN
FINAL DESIGN
ISSUE FOR BID & CONSTRUCTION

NOTE:

1. SURVEY OF EXISTING CONDITIONS PROVIDED BY THE CITY OF SPRINGFIELD, P21052 Mill Race Stormwater Facility REVISION 10 102114.dwg, DATED OCTOBER, 2014.

willamalane Park and Recreation District

LANDSCAPE ARCHITECTS SCHIRMER SATRE GROSS INC

Revisions and Addendums

Description	Date	No.	By
60% DESIGN	4/7/14	1	DS
REVISED 60% DESIGN	9/12/14	2	DS
90% DESIGN	12/12/14	3	DS
DRAFT 100% DESIGN	5/15/15	4	DS
FINAL 100% DESIGN	6/5/15	5	DS

amec foster wheeler

SPRINGFIELD OREGON

THE CITY OF SPRINGFIELD
DEVELOPMENT & PUBLIC WORKS
225 FIFTH STREET
SPRINGFIELD, OREGON 97477
VOICE: 541-726-3753
FAX: 541-726-3689
WWW.SPRINGFIELD-OR.GOV

DESIGN: DS | DRAWN: PM | CHECK: HM | PROJ. NO: P21052 | BID ON: 6/10/15

SPRINGFIELD MILL RACE STORMWATER FACILITY, BOOTH KELLY TRAILHEAD & MILL RACE PATH

PROPOSED SITE PLAN - CENTRAL

THIS DRAWING IS FULL SIZE WHEN PLOTTED AT 22"x34".

Plotted by/CURTIS, PATRICK on Friday, June 05, 2015 at 8:44:29 AM from the C-6 layout tab
File Name/Pathnet: \\2050\12750\12750\12750\LDWG_1008_LEGEND\C5-C7 - PROPOSED SITE PLAN_1008.DWG

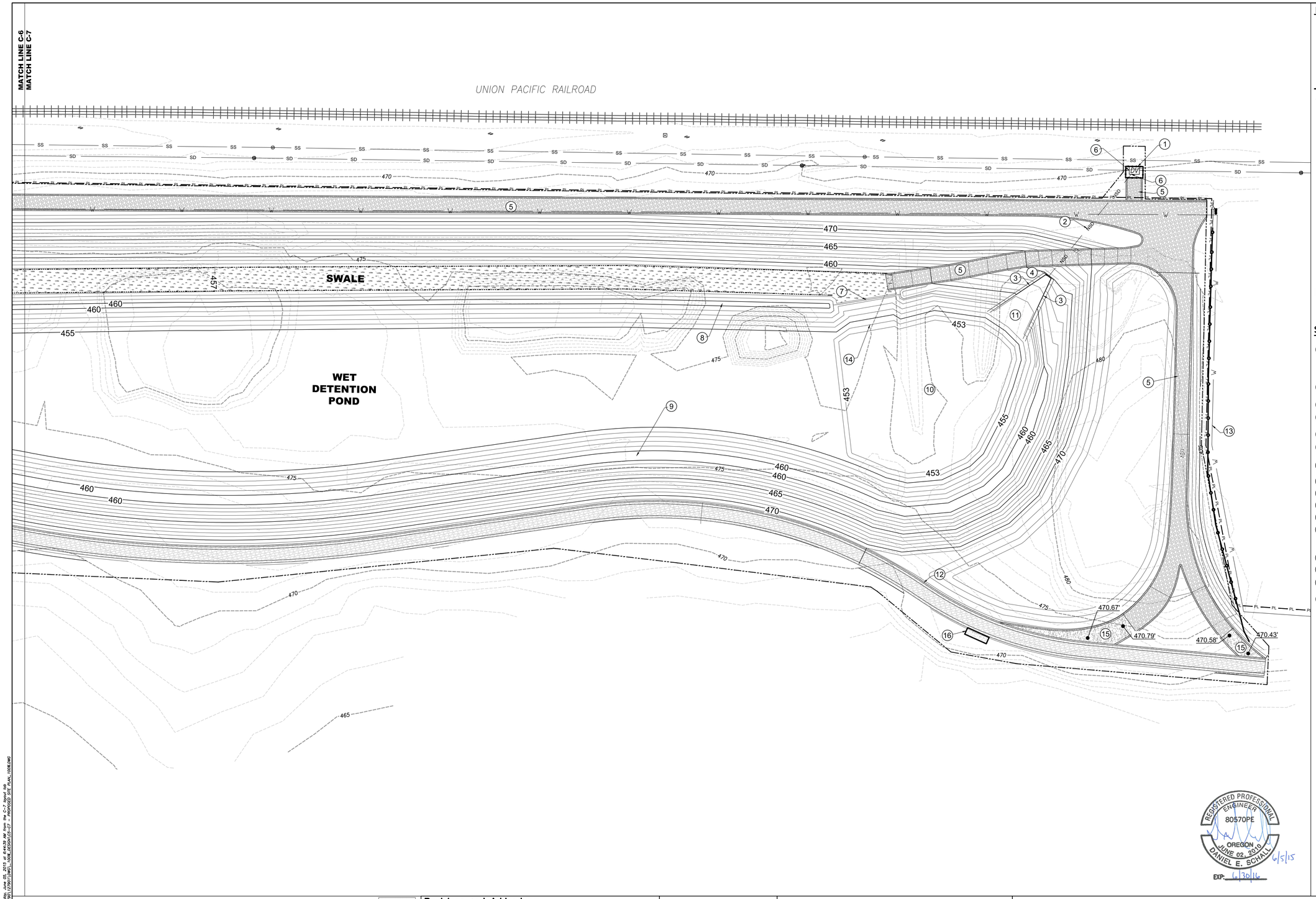

LEGEND

- STORM SEWER MANHOLE
- SANITARY SEWER MANHOLE
- AREA DRAIN
- UTILITY POLE
- GUY-WIRE ANCHOR
- CONSTRUCTION NOTES
- RAILROAD TRACKS
- FENCE
- OHP — OVERHEAD POWER LINES
- PROPOSED ELECTRIC CONDUIT
- GUY-WIRE
- SD — EXISTING STORM SEWER
- NSD — NEW STORM SEWER
- SS — EXISTING SANITARY SEWER
- EXISTING MAJOR CONTOUR
- EXISTING MINOR CONTOUR
- PROPOSED MAJOR CONTOUR
- PROPOSED MINOR CONTOUR
- W — PROPOSED FUTURE SUB WATERLINE
- LIMITS OF CONSTRUCTION
- PL — PROPERTY BOUNDARY
- 20' WIDE SWALE
- MILL RACE PATH
- DRIVABLE GRASS PAVER
- ASPHALT TRANSITION
- ACCESS ROAD

SITE PLAN NOTES

1. CONSTRUCT DIVERSION VAULT. VERIFY INVERT AND TIE TO EXISTING 48" STORM SEWER AND NEW 48" STORM SEWER. I.E. FOR NEW STORMWATER APPROX. 458.67'. VERIFY I.E. WITH ENGINEER. MUST MAINTAIN 0.10-FOOT DROP ACROSS VAULT. VERIFY ELEV. DOES NOT CONFLICT WITH OUTFALL I.E.. SEE DIVERSION VAULT DETAILS, DETAIL A, SHEET C-13. INSTALL PERIMETER SECURITY FENCE WITH BARBWIRE, SEE DETAIL G & H, SHEET C-17.
2. INSTALL 48" HDPE PIPE. APPROXIMATE LENGTH 116 FEET. SEE DETAIL C3, SHEET C-15 FOR PIPE CONNECTION DETAIL TO HEADWALL AND VAULT.
3. CONCRETE WING WALL, SEE DETAIL SHEETS C-14 AND C-15.
4. CONSTRUCT CONCRETE HEADWALL. NEW OUTFALL I.E. @ 458.63'. VERIFY ELEVATION IS LOWER THAN I.E. AT NOTE 1. SEE DETAIL SHEETS C-14 AND C-15.
5. NEW ACCESS ROAD. SEE DETAIL B, SHEET C-12.
6. INSTALL SLIDE GATES ON DOWNSTREAM STORM SEWER PIPES, TWO SLIDE GATES TOTAL. SEE DETAIL A, SHEET C-13, AND SHEET C-16 DETAILS.
7. CONCRETE OVERFLOW WIER, ELEV. 458.63' MUST MATCH OUTFALL I.E. INTO POND. SEE DETAIL SHEETS C-14 AND C-15.
8. 4' FLAT TOP BERM.
9. 8' BENCH FOR PLANTING SHADE TREES FOR POND.
10. SEDIMENT FOREBAY.
11. RIPRAP SPLASH PAD. SEE DETAIL B SHEET C-13.
12. INSTALL 2" SCH 40 PVC CONDUIT ALONG ENTIRE LENGTH OF PATH SHOULDER FOR FUTURE USE. APPROXIMATE LENGTH 2,226 FEET. ALIGNMENT TO FOLLOW IRRIGATION PIPING ALIGNMENT. REFERENCE DETAIL C, SHEET C-12 AND SHEETS L-1, L-2, AND L-3.
13. NEW 24" WATERLINE, INSTALLED BY OTHERS (SUB).
14. 5H:1V SLOPE FOR MAINTENANCE ACCESS INTO SW FACILITY.
15. 20' PATH ASPHALT TRANSITION, SEE MILL RACE PATH DETAIL C, SHEET C-12 FOR ASPHALT DETAIL. ONLY 1-FOOT AGGREGATE SHOULDERS.
16. 20' x 6' CONCRETE OVERLOOK WITH 2 BENCHES, SEE TH-9 FOR BENCHES, SEE DETAIL C, TH-4 FOR CONCRETE.

REGISTERED PROFESSIONAL ENGINEER 80570PE OREGON JUNE 02, 2010 DANIEL E. SCHALL
6/5/15
EXP. 6/30/16

SCALE: 1" = 40'
40' 20' 0 40'

100% DESIGN
FINAL DESIGN
ISSUE FOR BID & CONSTRUCTION

NOTE:

1. SURVEY OF EXISTING CONDITIONS PROVIDED BY THE CITY OF SPRINGFIELD, P21052 Mill Race Stormwater Facility REVISION 10 102114.dwg, DATED OCTOBER, 2014.

willamalane Park and Recreation District

LANDSCAPE ARCHITECTS SCHIRMER SATRE GROUP

Revisions and Addendums

Description	Date	No.	By
60% DESIGN	4/7/14	1	DS
REVISED 60% DEISGN	9/12/14	2	DS
90% DESIGN	12/12/14	3	DS
DRAFT 1005 DESIGN	5/15/15	4	DS
FINAL 100% DESIGN	6/5/15	5	DS

amec foster wheeler

SPRINGFIELD OREGON

THE CITY OF SPRINGFIELD
DEVELOPMENT & PUBLIC WORKS
225 FIFTH STREET
SPRINGFIELD, OREGON 97477
VOICE: 541-726-3753
FAX: 541-726-3689
WWW.SPRINGFIELD-OR.GOV

DESIGN: DS | DRAWN: PM | CHECK: HM | PROJ. NO: P21052 | BID ON: 6/10/15

SPRINGFIELD MILL RACE STORMWATER FACILITY, BOOTH KELLY TRAILHEAD & MILL RACE PATH

PROPOSED SITE PLAN - EAST

SHEET C-7

THIS DRAWING IS FULL SIZE WHEN PLOTTED AT 22"x34".

Plotted by/MCARTHY, PATRICK on Friday, June 05, 2015 at 8:44:39 AM from the C-7 layout tab.
File: /home/PROJECT/2000/12700/12720/Civil/_1005_DESIGN/15-07 - PROPOSED SITE PLAN_1005B.DWG

LEGEND

- PROPOSED MAJOR CONTOUR
- PROPOSED MINOR CONTOUR
- PL — PROPERTY BOUNDARY
- 20' WIDE SWALE
- OHW — ORDINARY HIGH WATER
- MILL RACE PATH
- ACCESS ROAD
- DRIVABLE GRASS PAVER
- CONSPN BRIDGE
- ASPHALT TRANSITION

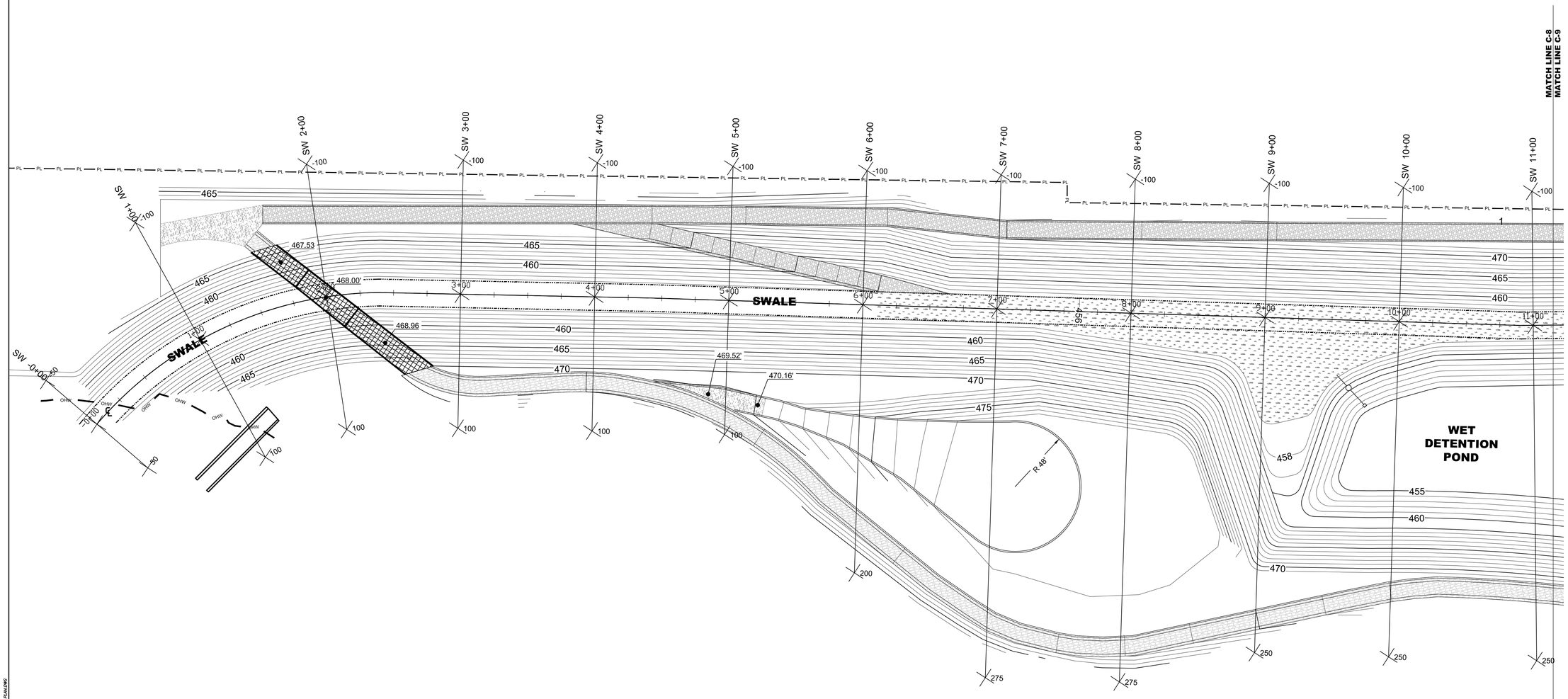

REGISTERED PROFESSIONAL ENGINEER 80570PE OREGON JUNE 02, 2010 DANIEL E. SCHALL 6/5/15 EXP: 6/30/16

SCALE: 1" = 40'

40' 20' 0 40'

N

100% DESIGN
FINAL DESIGN
ISSUE FOR BID & CONSTRUCTION

NOTE:

1. SURVEY OF EXISTING CONDITIONS PROVIDED BY THE CITY OF SPRINGFIELD, P21052 Mill Race Stormwater Facility REVISION 10 102114.dwg, DATED OCTOBER, 2014.

willamalane Park and Recreation District

LANDSCAPE ARCHITECTS SCHIRMER SATRE GROSS

Revisions and Addendums			
Description	Date	No.	By
60% DESIGN	4/7/14	1	DS
REVISED 60% DESIGN	9/12/14	2	DS
90% DESIGN	12/12/14	3	DS
DRAFT 100% DESIGN	5/15/15	4	DS
FINAL 100% DESIGN	6/5/15	5	DS

amec foster wheeler

SPRINGFIELD OREGON

THE CITY OF SPRINGFIELD
DEVELOPMENT & PUBLIC WORKS
225 FIFTH STREET
SPRINGFIELD, OREGON 97477
VOICE: 541-726-3753
FAX: 541-726-3689
WWW.SPRINGFIELD-OR.GOV

DESIGN: DS | DRAWN: PM | CHECK: HM | PROJ. NO: P21052 | BID ON: 6/10/15

SPRINGFIELD MILL RACE STORMWATER FACILITY, BOOTH KELLY TRAILHEAD & MILL RACE PATH

GRADING PLAN SECTIONS - WEST

SHEET C-8

THIS DRAWING IS FULL SIZE WHEN PLOTTED AT 22"x34".

Plotted by:MCARTHY, PATRICK on Friday, June 05, 2015 at 8:54:37 AM from file C-8 layout tab
File Name/Pathname:\\2000\12200\12290\DWG_SEWER\125-011-22-22 - 100% GRADING PLAN.DWG

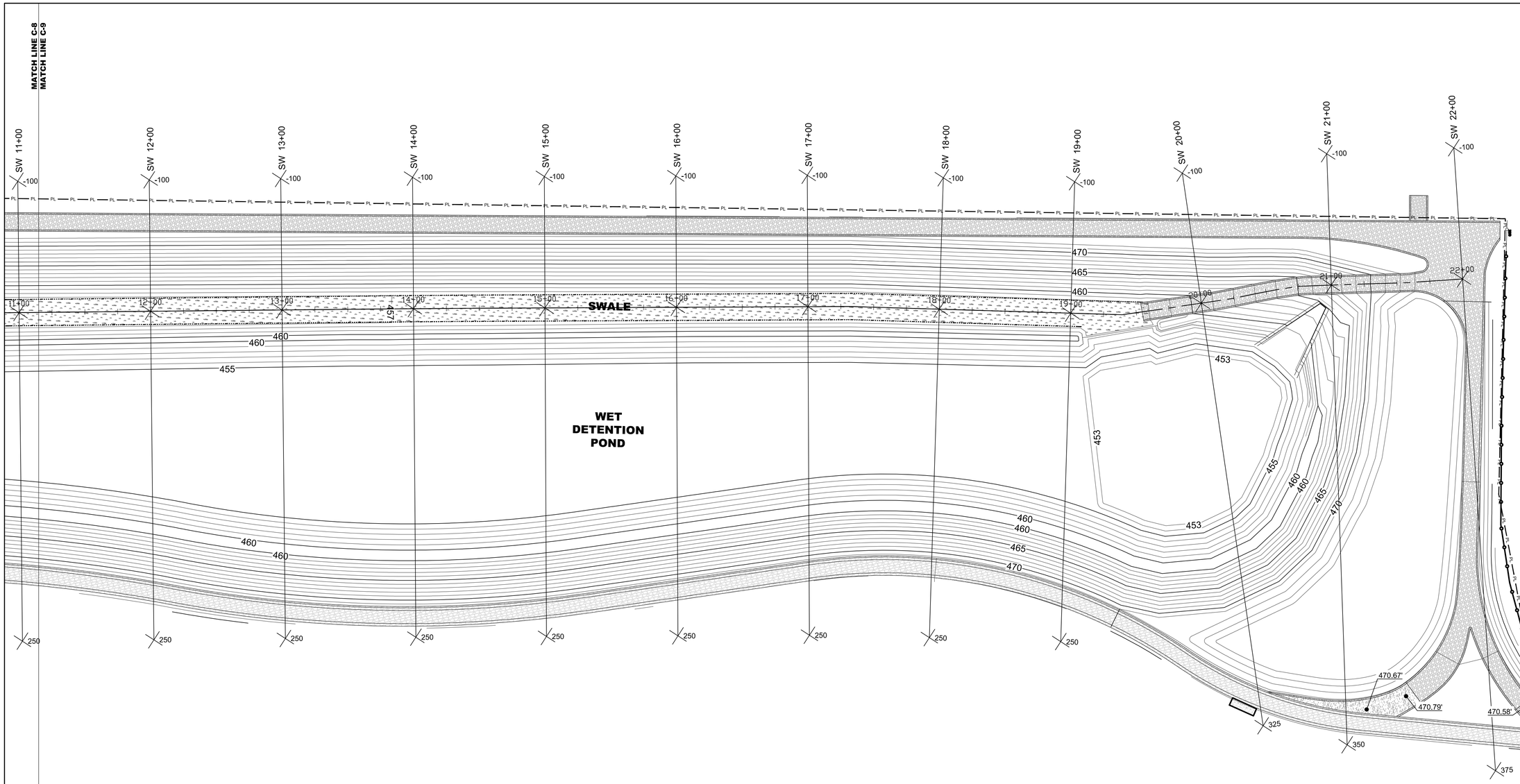

LEGEND

- FENCE
- PROPOSED MAJOR CONTOUR
- PROPOSED MINOR CONTOUR
- PROPERTY BOUNDARY
- 20' WIDE SWALE
- MILL RACE PATH
- ACCESS ROAD
- DRIVABLE GRASS PAVER
- ASPHALT TRANSITION

REGISTERED PROFESSIONAL ENGINEER 80570PE OREGON JUNE 02, 2010 DANIEL E. SCHALL

6/5/15

EXP: 6/30/16

SCALE: 1" = 40'

40' 20' 0 40'

N

100% DESIGN

FINAL DESIGN
ISSUE FOR BID & CONSTRUCTION

NOTE:

1. SURVEY OF EXISTING CONDITIONS PROVIDED BY THE CITY OF SPRINGFIELD, P21052 Mill Race Stormwater Facility REVISION 10 102114.dwg, DATED OCTOBER, 2014.

willamalane Park and Recreation District

LANDSCAPE ARCHITECTS SCHIRMER SATRE GROUP

Revisions and Addendums

Description	Date	No.	By
60% DESIGN	4/7/14	1	DS
REVISED 60% DESIGN	9/12/14	2	DS
90% DESIGN	12/12/14	3	DS
DRAFT 100% DESIGN	5/15/15	4	DS
FINAL 100% DESIGN	6/5/15	5	DS

amec foster wheeler

SPRINGFIELD OREGON

THE CITY OF SPRINGFIELD
DEVELOPMENT & PUBLIC WORKS
225 FIFTH STREET
SPRINGFIELD, OREGON 97477
VOICE: 541-726-3753
FAX: 541-726-3689
WWW.SPRINGFIELD-OR.GOV

DESIGN: DS | DRAWN: PM | CHECK: HM | PROJ. NO: P21052 | BID ON: 6/10/15

SPRINGFIELD MILL RACE STORMWATER FACILITY, BOOTH KELLY TRAILHEAD & MILL RACE PATH

GRADING PLAN SECTIONS - EAST

THIS DRAWING IS FULL SIZE WHEN PLOTTED AT 22"x34".

Plotted by:MCARTHY, PATRICK on Friday, June 05, 2015 at 6:54:45 AM from the C-9 layout tab
File Name:P:\projects\12000\12300\12360\12360\Dwgs\L_100d_SESSION\05-01-02-02 - 100d_GRADING PLAN.DWG

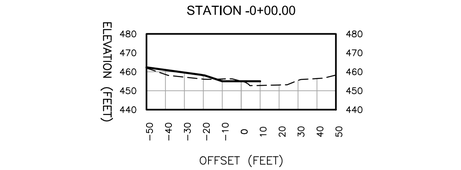

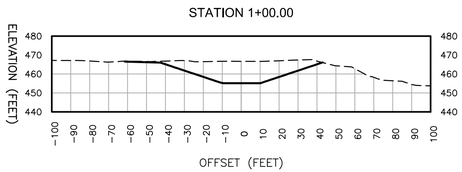

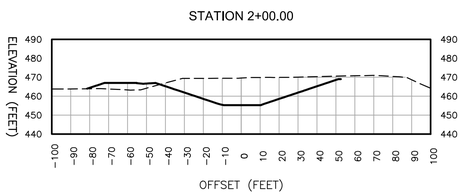

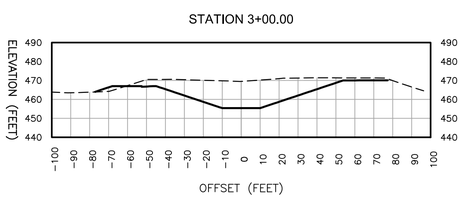

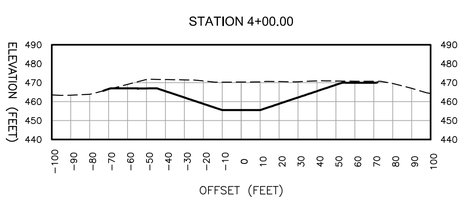

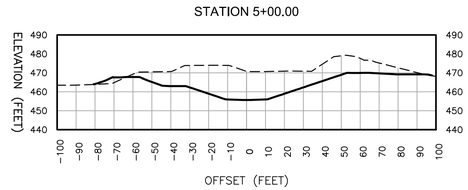

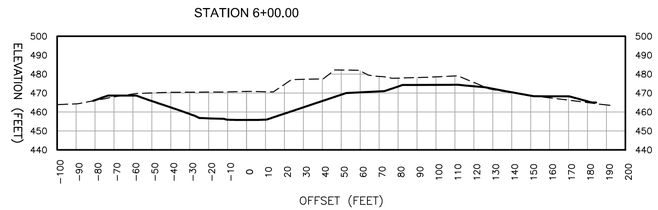

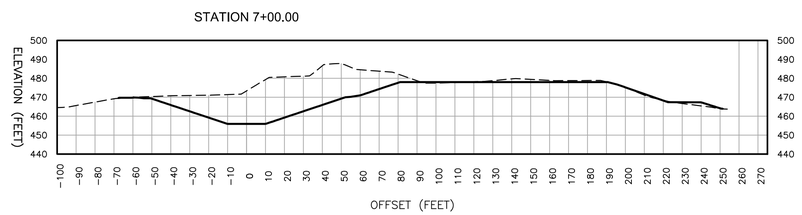

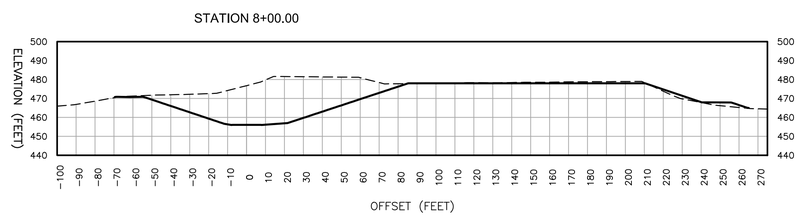

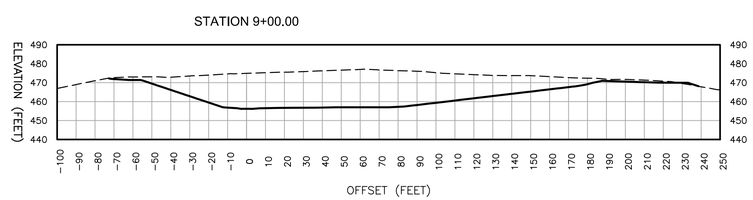

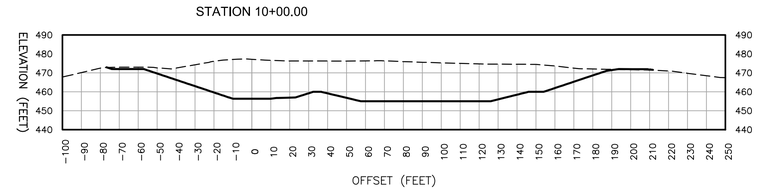

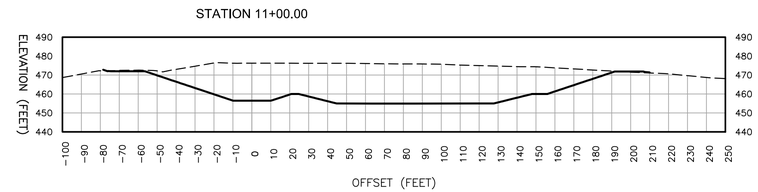

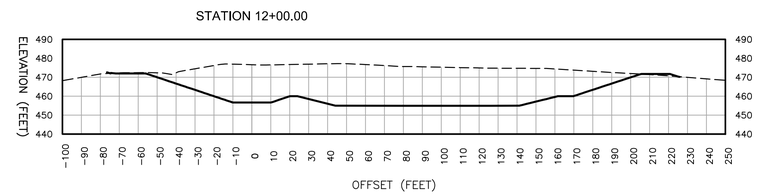

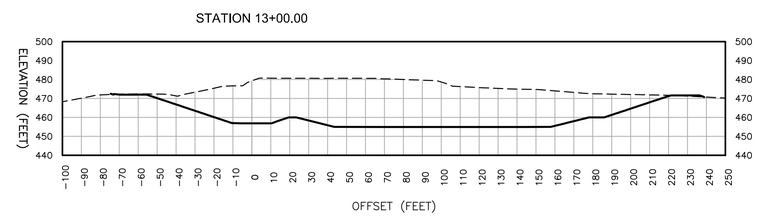

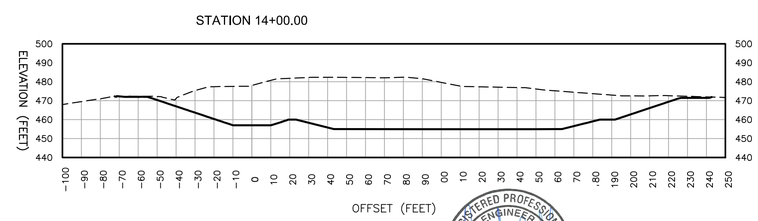

REGISTERED PROFESSIONAL ENGINEER
80570PE
OREGON
JUNE 02, 2010
DANIEL E. SCHALLY
6/5/15
EXP: 6/30/16

100% DESIGN
FINAL DESIGN
ISSUE FOR BID & CONSTRUCTION

LEGEND

OFFSET 0	SWALE CENTERLINE
— — —	EXISTING GRADE
———	PROPOSED GRADE

willamalane Park and Recreation District

LANDSCAPE ARCHITECTS SCHIRMER SATRE GROSS INC

Revisions and Addendums

Description	Date	No.	By
60% DESIGN	4/7/14	1	DS
REVISED 60% DESIGN	9/12/14	2	DS
90% DESIGN	12/12/14	3	DS
DRAFT 100% DESIGN	5/15/15	4	DS
100% FINAL DESIGN	6/5/15	5	DS

amec foster wheeler

SPRINGFIELD OREGON

THE CITY OF SPRINGFIELD
DEVELOPMENT & PUBLIC WORKS
225 FIFTH STREET
SPRINGFIELD, OREGON 97477
VOICE: 541-726-3753
FAX: 541-726-3689
WWW.SPRINGFIELD-OR.GOV

DESIGN: DS | DRAWN: PM | CHECK: HM | PROJ. NO: P21052 | BID ON: 6/10/15

SPRINGFIELD MILL RACE STORMWATER FACILITY, BOOTH KELLY TRAILHEAD & MILL RACE PATH

GRADING CROSS SECTION I

SHEET C-10

THIS DRAWING IS FULL SIZE WHEN PLOTTED AT 22"x34".

Plotted by/MCARTHY, PATRICK on Friday, June 05, 2015 at 6:54:49 AM from file C-10 layout.dgn
File Name/Project\13000\12300\12390\DWG_SIDE_DESIGN\05-01-15\C-10 - TYPICAL GRADING PLAN.DWG

STATION 15+00.00

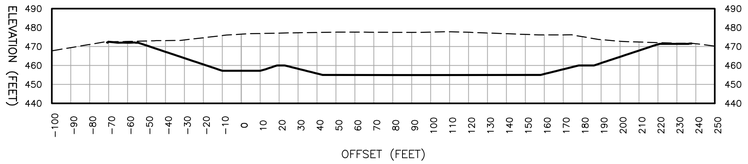

STATION 16+00.00

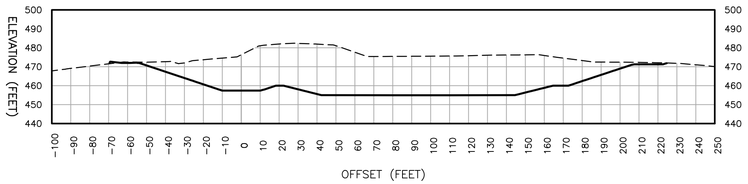

STATION 17+00.00

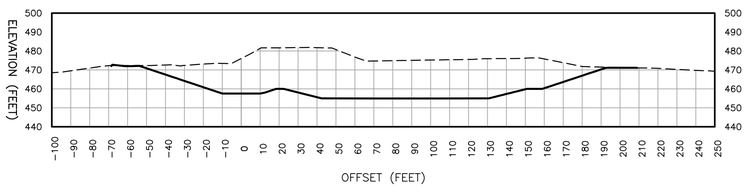

STATION 18+00.00

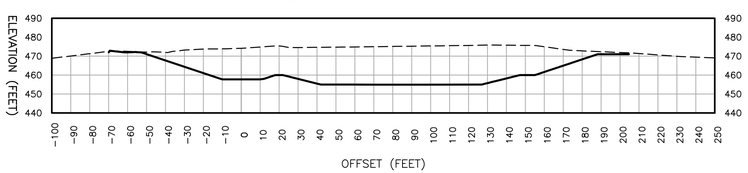

STATION 19+00.00

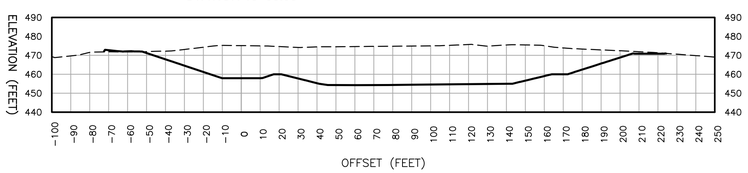

STATION 20+00.00

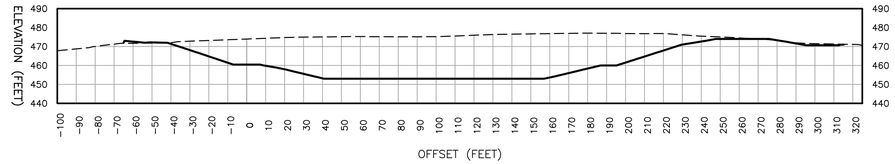

STATION 21+00.00

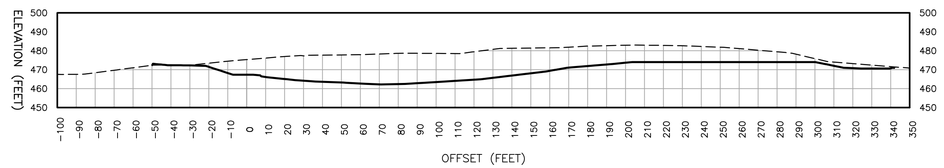

STATION 22+00.00

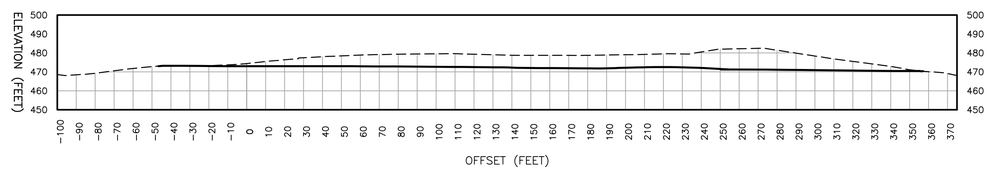

REGISTERED PROFESSIONAL ENGINEER
80570PE
OREGON
JUNE 02, 2015
DANIEL E. SCHALL
6/5/15
EXP: 6/30/16

100% DESIGN
FINAL DESIGN
ISSUE FOR BID & CONSTRUCTION

LEGEND

OFFSET 0 SWALE CENTERLINE
EXISTING GRADE
PROPOSED GRADE

willamalane Park and Recreation District

LANDSCAPE ARCHITECTS SCHIRMER SATRE GROSS INC

Revisions and Addendums

Description	Date	No.	By
60% DESIGN	4/7/14	1	DS
REVISED 60% DESIGN	9/12/14	2	DS
90% DESIGN	12/12/14	3	DS
DRAFT 100% DESIGN	5/15/15	4	DS
FINAL 100% DESIGN	6/5/15	5	DS

amec foster wheeler

SPRINGFIELD OREGON

THE CITY OF SPRINGFIELD
DEVELOPMENT & PUBLIC WORKS
225 FIFTH STREET
SPRINGFIELD, OREGON 97477
VOICE: 541-726-3753
FAX: 541-726-3689
WWW.SPRINGFIELD-OR.GOV

DESIGN: DS | DRAWN: PM | CHECK: HM | PROJ. NO: 921052 | BID ON: 6/10/15

SPRINGFIELD MILL RACE STORMWATER FACILITY, BOOTH KELLY TRAILHEAD & MILL RACE PATH

GRADING CROSS SECTION II

SHEET C-11

12 OF 47

THIS DRAWING IS FULL SIZE WHEN PLOTTED AT 22"x34".

Plotted by/MCARTHY, PATRICK on Friday, June 05, 2015 at 6:54:54 AM from file C-11 layout tab
File Name/P:\acad\13000\12700\12790\12790L\12790L-SESSION1\25-C11-C22 - TYPE_GRADING PLAN.DWG

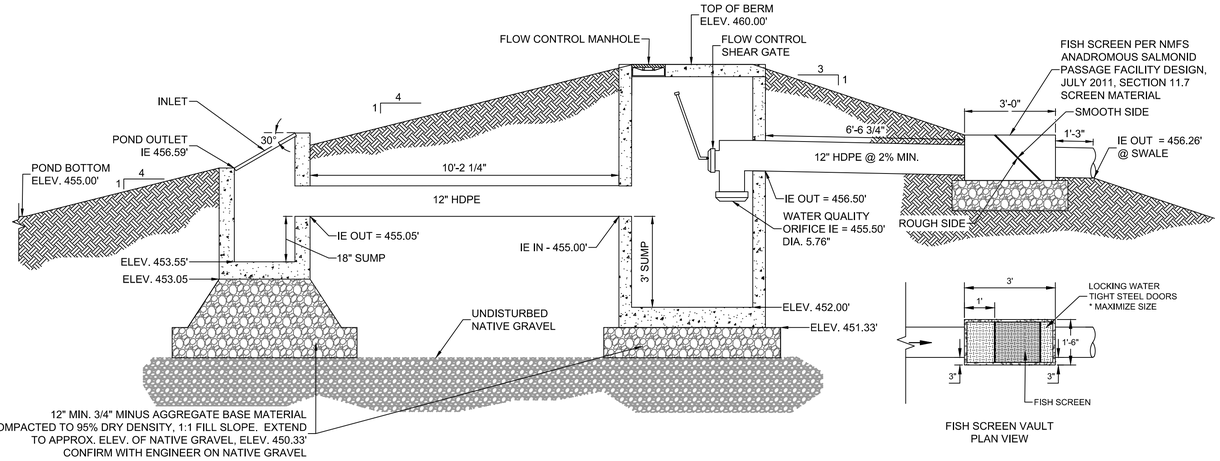

FISH SCREEN VAULT
PLAN VIEW

FLOW CONTROL STRUCTURE LAYOUT — A / C-12
NTS

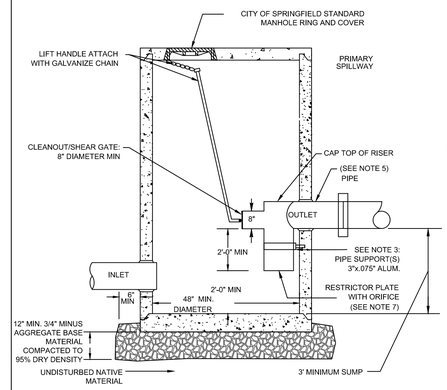

NOTES
1. EXCEPT AS SHOWN OR NOTED, UNITS SHALL BE CONSTRUCTED IN ACCORDANCE WITH THE STANDARD SPECIFICATIONS.
2. FLAT TOP SHALL BE H-20 LOAD RATED.
3. PIPE SUPPORTS AND RESTRICTOR/SEPARATOR SHALL BE OF THE SAME MATERIAL, AND BE ANCHORED AT 3' MAX SPACING BY 5/8" DIA. STAINLESS STEEL EXPANSION BOLTS OR EMBEDDED 2" IN WALL.
4. THE RESTRICTOR/SEPARATOR SHALL BE FABRICATED FROM .060" (MM) ALUMINUM, IN ACCORDANCE WITH THE APPLICABLE SECTIONS OF AASHTO M 36, M 196, M197, AND M 274.
5. THE VERTICAL RISER STEM OF THE RESTRICTOR/SEPARATOR SHALL BE THE SAME DIAMETER AS THE HORIZONTAL OUTLET PIPE.
6. REMOVABLE ORIFICE AS SPECIFIED IN THE CONTRACT PLANS. SPECIFIED OPENING TO BE CUT ROUND AND SMOOTH.
7. CLEANOUT/SHEAR GATE: ALUMINUM ALLOY PER ASTM B-26-ZG-32a OR CAST IRON ASTM A48 CLASS 30B AS REQUIRED. LIFT HANDLE EITHER SOLID OR TUBING WITH ADJUSTABLE HOOK AS REQUIRED. NEOPRENE RUBBER GASKET REQUIRED BETWEEN RISER MOUNTING FLANGE AND GATE FLANGE. MATING SURFACES OF LID AND BODY TO BE MACHINED FOR PROPER FIT. FLANGE MOUNTING BOLTS SHALL BE 3/8" DIA STAINLESS
8. ALTERNATE CLEANOUT/SHEAR GATES ARE ACCEPTABLE, PROVIDED THEY MEET THE MATERIAL SPECIFICATIONS ABOVE AND HAVE A SIX BOLT, 10 3/8" BOLT CIRCLE FOR BOLTING THE FLANGE CONNECTION.
9. GATE SHALL NOT OPEN BEYOND THE CLEAR OPENING BY LIMITED HINGE MOVEMENT, STOP TAB, OR SOME OTHER DEVICE.
10. PRECAST CONCRETE MANHOLE CONSTRUCTED IN ACCORDANCE WITH ASTM C478.

FLOW CONTROL MANHOLE — F / C-12
NTS

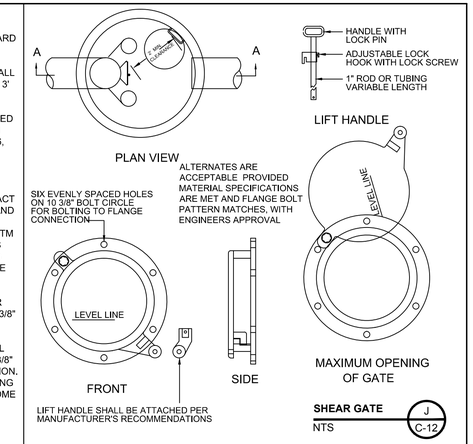

SHEAR GATE — J / C-12
NTS

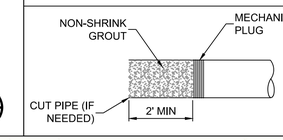

NOTE:
ONLY FOR SEWER PIPES
15" DIA. AND SMALLER

GROUT PLUG — K / C-12
NTS

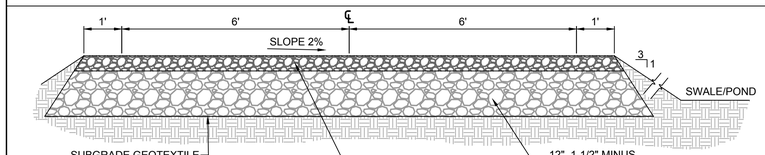

ACCESS ROAD — B / C-12
NTS

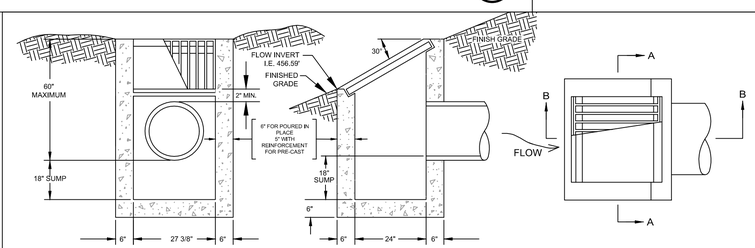

SECTION A-A
SECTION B-B
PLAN

NOTES:
1. ALL PRE-CAST SECTIONS SHALL CONFORM TO REQUIREMENTS OF ASTM C-478.
2. INSTALL STRUCTURE ON MINIMUM OF 8" OF 3/4" - 0" COMPACTED BASE MATERIAL.
3. PRE-CAST REINFORCEMENT SHALL BE REBAR MEETING ASTM A615 GRADE 60 OR WELDED WIRE MEETING ASTM A497.
4. ALL POURED IN-PLACE CONCRETE SHALL HAVE A 28 DAY STRENGTH OF 3000 PSI AND SLUMP OF 2" TO 4".
5. PRE-CAST STRUCTURE'S CONFORMING TO O.D.O.T. TYPE G-2 CATCH BASIN DESIGN/WITH DITCH INLET TOP ARE AN ACCEPTABLE ALTERNATE.

FLOW CONTROL INLET — G / C-12
NTS

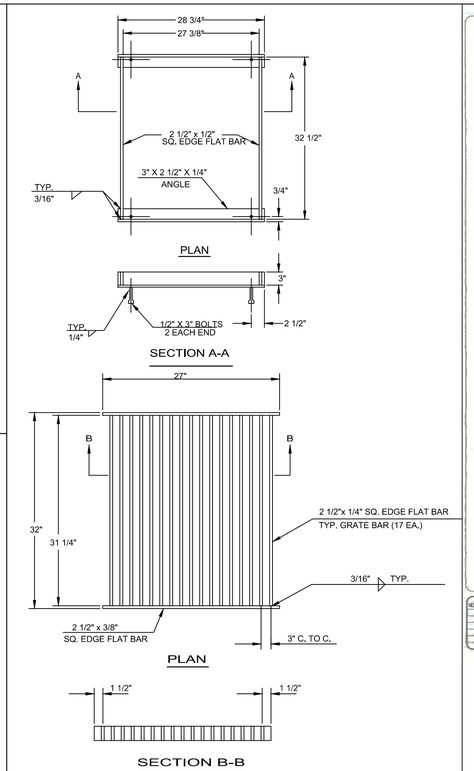

NOTE:
FRAME AND GRATE SHALL BE NEW STRUCTURAL ASTM A-36 FLAT BAR STEEL OR APPROVED EQUAL.

FLOW CONTROL INLET FRAME AND GRATE — I / C-12
NTS

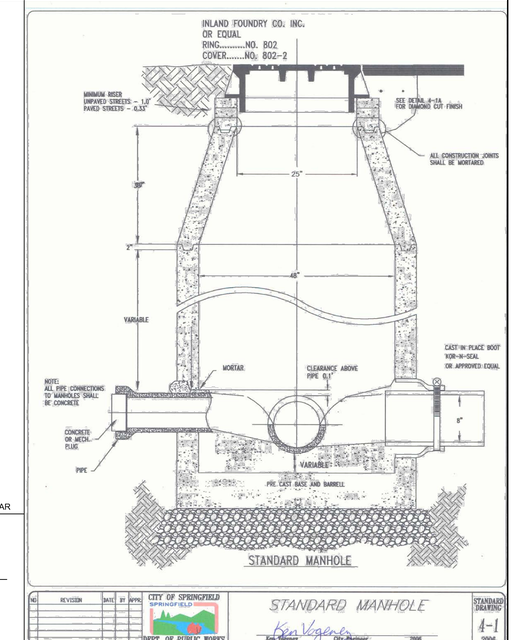

No.	REVISION	DATE	BY	APPR.

CITY OF SPRINGFIELD — DEPT. OF PUBLIC WORKS — STANDARD MANHOLE — STANDARD DRAWING A-1 — 2006

STANDARD MANHOLE — L / C-12
NTS

NOTES:
1. FASTEN UTILITIES TO BRIDGE & KEYSTONE WALL WITH PIPE CLAMPS/FASTENERS IN ACCORDANCE WITH ODOT 02560
2. MAXIMUM CROSS SLOPE FOR PATH @ 2%
3. RUN 2" SCH 40 PVC ELECTRICAL CONDUIT WITH ALL IRRIGATION SLEEVES ACROSS PATH. SEE IRRIGATION PLANS.

MILL RACE PATH — C / C-12
NTS

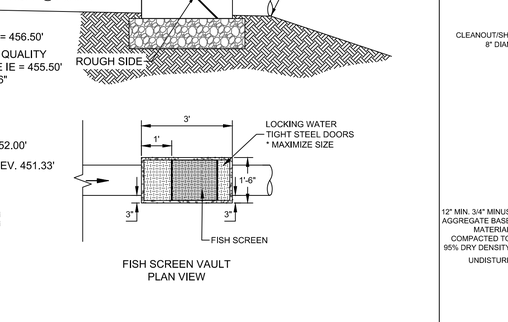

WOODEN POST
METAL POST

NOTE: SEE SHEET C-17
FOR FENCE DETAILS

FENCE & POST DETAIL — H / C-12
NTS

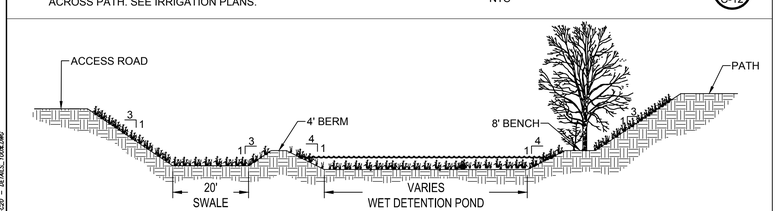

NOTES:
1. PROVIDE A MIN. OF 6" OF TOPSOIL IN ALL AREAS TO RECEIVE TREES, SHRUBS, OR SEEDING. EXCEPT FOR POND FOREBAY AND POND BOTTOM.
2. REFERENCE LANDSCAPE SHEETS FOR PLANTING DETAILS.
3. REFERENCE SITE GEOTECHNICAL REPORT FOR SITE FILLING.

STORMWATER FACILITY — D / C-12
NTS

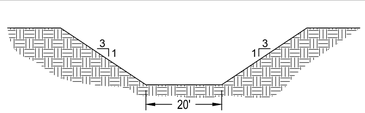

SWALE — E / C-12
NTS

REGISTERED PROFESSIONAL ENGINEER 80570PE OREGON JUNE 02, 2010 DANIEL E. SCHALL
6/5/15
EXP: 6/30/16

100% DESIGN
FINAL DESIGN
ISSUE FOR BID & CONSTRUCTION

willamalane Park and Recreation District
LANDSCAPE ARCHITECTS SCHIRMER SATRE GROSS INC.

Revisions and Addendums			
Description	Date	No.	By
60% DESIGN	4/7/14	1	DS
REVISED 60% DESIGN	9/12/14	2	DS
90% DESIGN	12/12/14	3	DS
DRAFT 100% DESIGN	5/15/15	4	DS
FINAL 100% DESIGN	6/5/15	5	DS

amec foster wheeler

SPRINGFIELD OREGON

THE CITY OF SPRINGFIELD
DEVELOPMENT & PUBLIC WORKS
225 FIFTH STREET
SPRINGFIELD, OREGON 97477
VOICE: 541-726-3753
FAX: 541-726-3689
WWW.SPRINGFIELD-OR.GOV

DESIGN: DS | DRAWN: PM | CHECK: HM | PROJ. NO: P21052 | BID ON: 6/10/15

SPRINGFIELD MILL RACE STORMWATER FACILITY, BOOTH KELLY TRAILHEAD & MILL RACE PATH
FLOW CONTROL STRUCTURE & TYPICAL DETAILS

SHEET C-12
13 OF 47

THIS DRAWING IS FULL SIZE WHEN PLOTTED AT 22"x34".

Plotted by/CASARTHY, PATRICK on Friday, June 05, 2015 at 7:01:09 AM from the C-12 layout tab
File: Home/Projects/12000/12300/12350/12350.11/dwg/L_DWG/12350V12-C20 - 22X34.L.1004.dwg

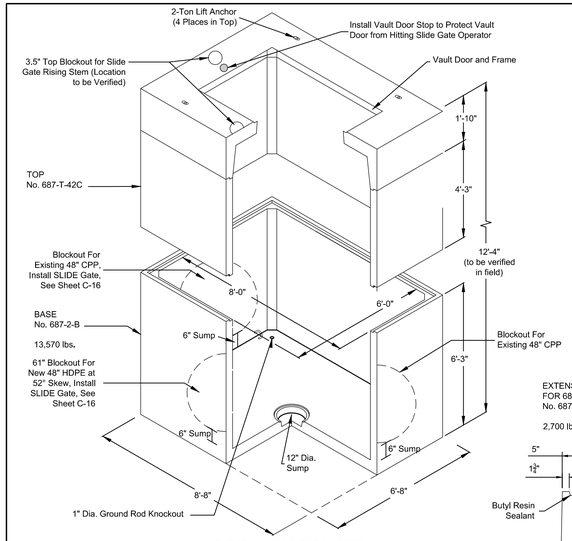

TYPICAL VAULT ISO VIEW

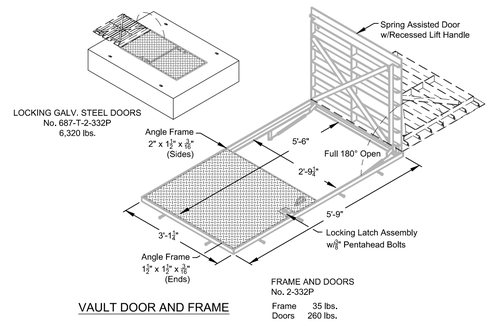

VAULT DOOR AND FRAME

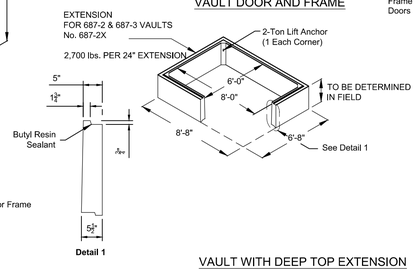

VAULT WITH DEEP TOP EXTENSION

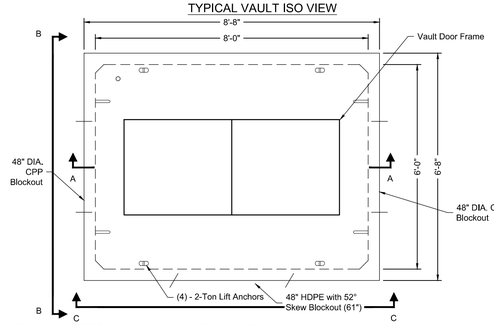

PLAN VIEW

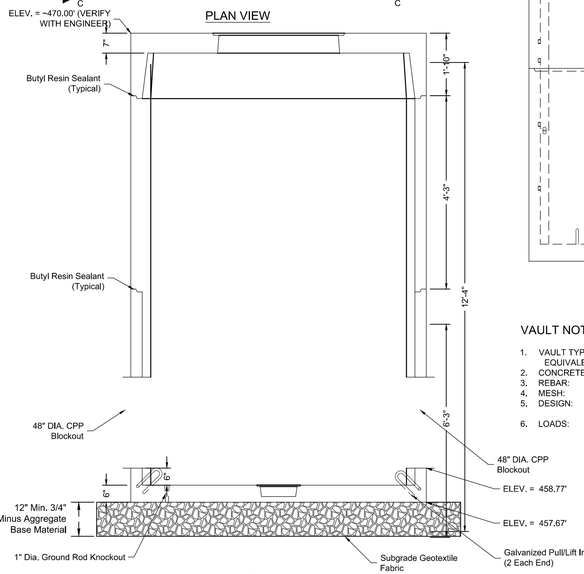

SECTION A-A

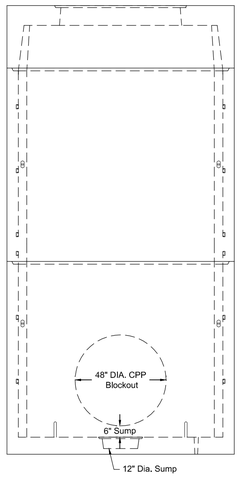

SECTION B-B

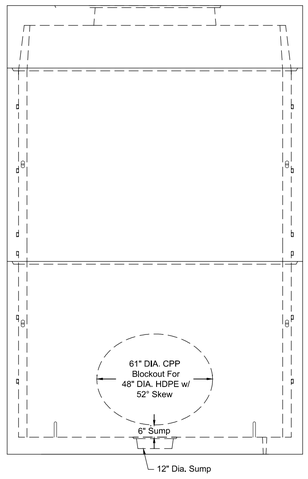

SECTION C-C

VAULT NOTES: STRUCTURAL NOTES (f'_c = 5,5000 psi):

1. VAULT TYPE: OLDCASTLE 687-2-LA PRECAST VAULT WITH 687 EXTENSION AND LOCKING GLAV. STEEL DOORS (OR APPROVED EQUIVALENT)
2. CONCRETE: 28-DAY COMPRESSICE STRENGTH f'_c = 5,5000 psi
3. REBAR: ASTM A-615 GRADE 60
4. MESH: ASTM A-185 GRADE 65
5. DESIGN: ACI-318 BUILDING CODE
   AASHTO STANDARD SPECIFICATIONS FOR HIGHWAY BRIDGES
6. LOADS: H20 TRUCK WHEEL LOAD WITH IMPACT
   ASTM C-857 "MIN. STRUCTURAL DESIGN LOADING FOR UNDERGROUND PRECAST CONCRETE STRUCTURES"
   ASTM-C-890 "MIN. STRUCTURAL DESIGN LOADING FOR MONOLITHIC OR SECTIONAL PRECAST CONCRETE WATER AND WASTEWATER STRUCTURES"
   40 pcf LATERAL SOIL PRESSURE ABOVE WATERTABLE
   80 pcf LATERAL SOIL PRESSURE BELOW WATERTABLE

VAULT NOTES: BACKFILLING

1. PRIOR TO PLACEMENT OF CRUSHED ROCK, CONFIRM SUBGRADE W/ ENGINEER.
2. BACKFILL AROUND THE VAULT SHOULD CONSIST OF GOOD COMPACTABLE MATERIAL SUCH AS SELECT BACKFILL MATERIAL. IN NO CASE SHALL THE MATERIAL BE SATURATED SOIL, OR CONTAIN LARGE ROCKS OR CHUNKS. NO VOIDS SHALL REMAIN BETWEEN THE VAULT WALLS AND NATIVE SOILS OF EXCAVATION.
3. BACKFILLING SHOULD NOT BE DONE UNTIL VAULT IS COMPLETELY ASSEMBLED MAKING CERTAIN TO PLACE BACKFILL EVENLY AROUND VAULT AND COMPACT THE BACKFILL PROGRESSIVELY IN 6-INCH LIFTS FROM THE BOTTOM TO THE TOP SURFACE.
4. USE HAND-HELD COMPACTING EQUIPMENT WITH 3-FEET AROUND THE VAULT.
5. COMPACT TO 90% AASHTO T-99.

DIVERSION VAULT PLAN AND SECTION DETAILS (A / C-13)
NTS

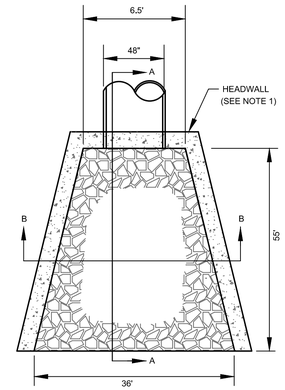

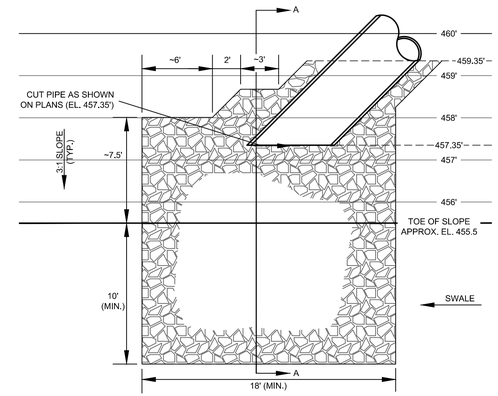

BYPASS PIPE PLAN VIEW

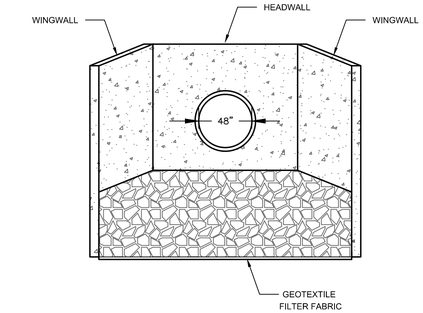

POND OUTFALL SECTION B-B

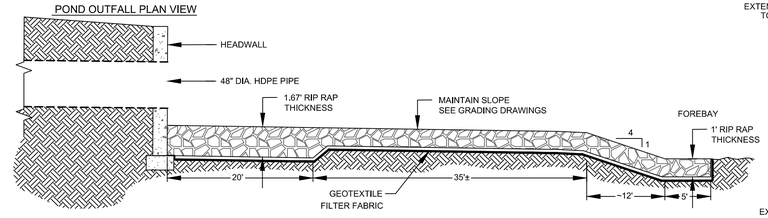

POND OUTFALL PLAN VIEW

POND OUTFALL SECTION A-A

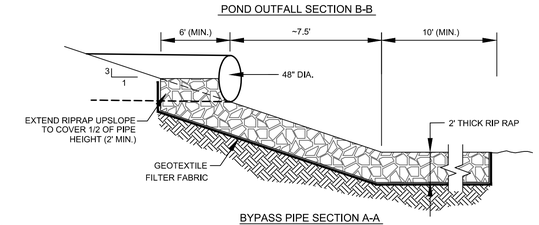

BYPASS PIPE SECTION A-A

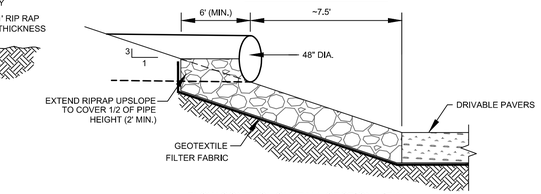

FLOW CONTROL OUTFALL SECTION VIEW

OUTFALL PROTECTION NOTES

1. RIP RAP AT THE POND OUTFALL & FLOW CONTROL OUTFALL SHALL BE CLASS 50.
2. RIP RAP AT THE OUTFALL OF THE BYPASS PIPE SHALL BE CLASS 100.
3. A HEADWALL IS ONLY REQUIRED AT THE POND OUTFALL PIPE. SEE DETAIL SHEETS.
4. RIP RAP SHALL BE QUARRY STONE. COBBLES ARE NOT ACCEPTABLE. ROCKS SHALL BE PLACED TO PROVIDE A MINIMUM OF VOIDS. SURFACE ROCKS SHALL PROTRUDE AT LEAST 1/2 THEIR VERTICAL DIMENSION.
5. RAP RAP SHALL BE PLACED OVER GEOTEXTILE FILTER BLANKET .

REGISTERED PROFESSIONAL ENGINEER 80570PE OREGON JUNE 02, 2010 DANIEL E. SCHALL 6/5/15
EXP: 6/30/16

POND OUTFALL AND BYPASS PIPE PLAN AND SECTION DETAILS (B / C-13)
NTS

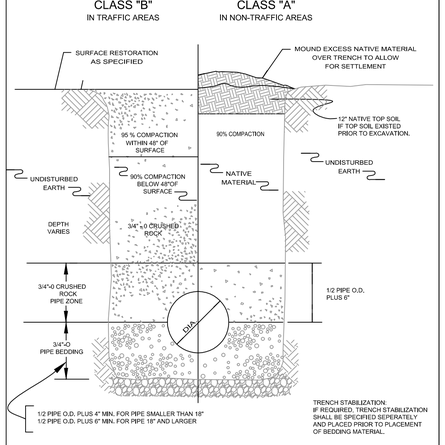

NOTE:
ALL COMPACTTION REQUIREMENTS PER AASHTO T-99 AND ODOT/APWA SPEC 00405.

TRENCH BACKFILL (C / C-13)
NTS

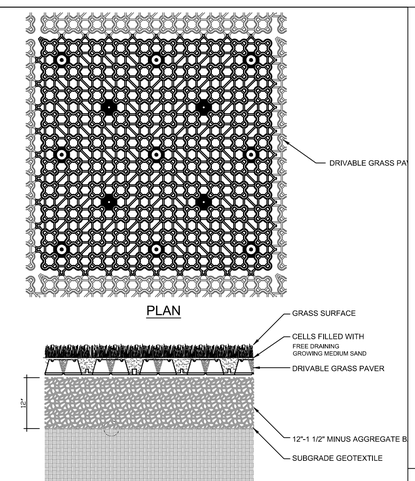

DRIVABLE GRASS PAVER (D / C-13)
NTS

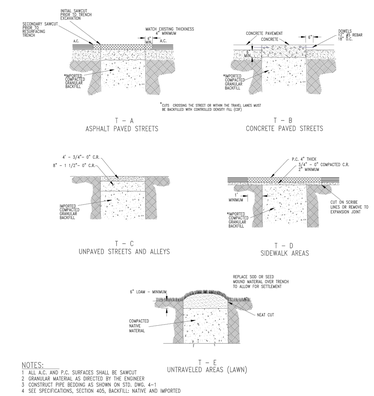

SURFACE RESTORATION OVER TRENCH EXCAVATION (E / C-13)
NTS

100% DESIGN
FINAL DESIGN
ISSUE FOR BID & CONSTRUCTION

Revisions and Addendums			
Description	Date	No.	By
60% DESIGN	4/7/14	1	DS
REVISED 60% DESIGN	9/12/14	2	DS
90% DESIGN	12/12/14	3	DS
DRAFT 100% DESIGN	5/15/15	4	DS
FINAL 100% DESIGN	6/5/15	5	DS

DESIGN: DS | DRAWN: PM | CHECK: HM | PROJ. NO: P21052 | BID ON: 6/10/15

THE CITY OF SPRINGFIELD
DEVELOPMENT & PUBLIC WORKS
225 FIFTH STREET
SPRINGFIELD, OREGON 97477
VOICE: 541-726-3753
FAX: 541-726-3689
WWW.SPRINGFIELD-OR.GOV

SPRINGFIELD MILL RACE STORMWATER FACILITY, BOOTH KELLY TRAILHEAD & MILL RACE PATH

DIVERSION VAULT & OUTFALL RIPRAP DETAILS

SHEET C-13

THIS DRAWING IS FULL SIZE WHEN PLOTTED AT 22"x34".

Plotted by/CASTATIVE, PATRICK on Friday, June 05, 2015 at 7:01:12 AM from the C-13 layout tab
File: Home/Projects/12200/12200/12290/12290/12290.dwg

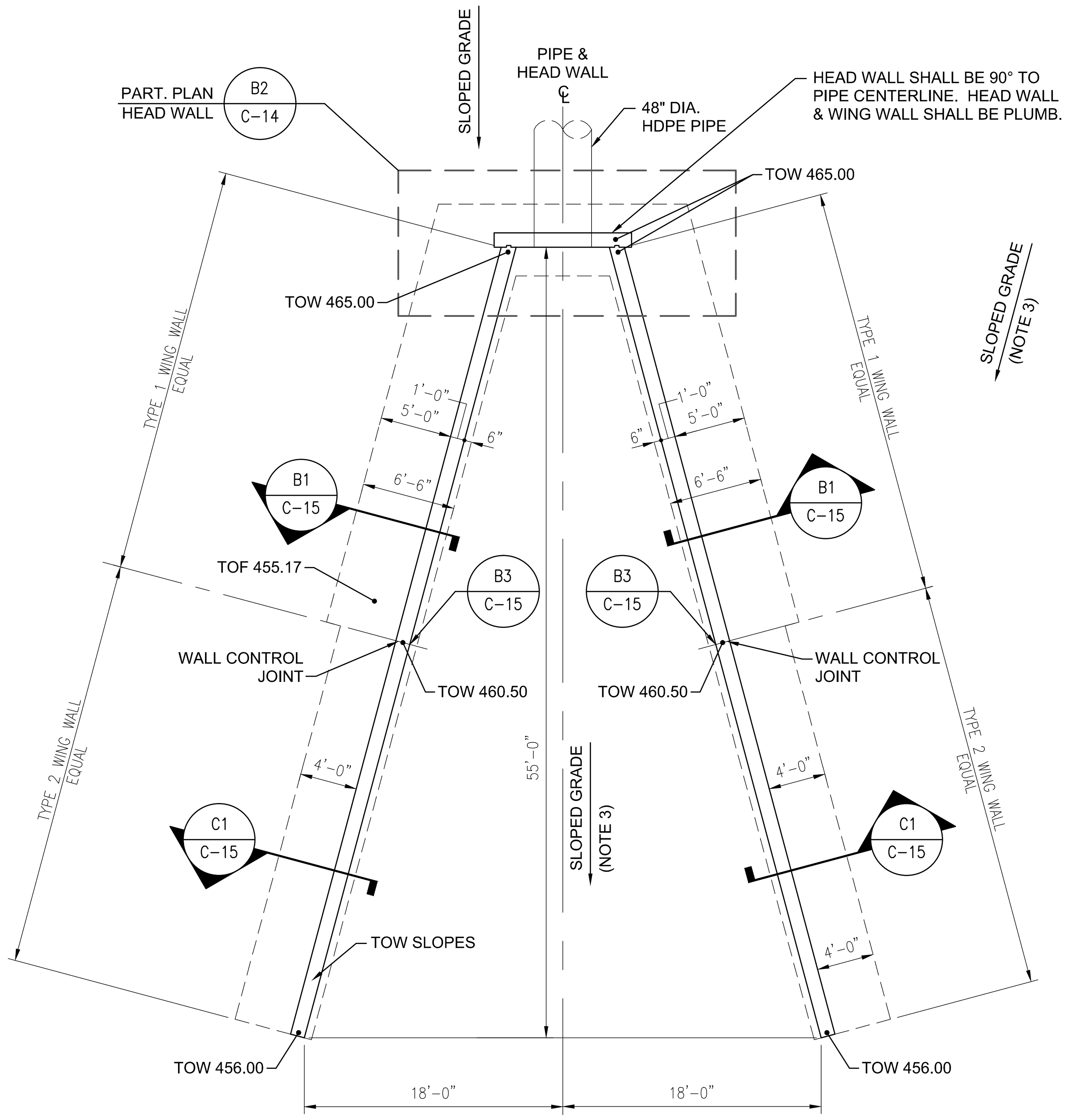

HEAD WALL AND WING WALL PLAN (A1 / C-14)
NTS

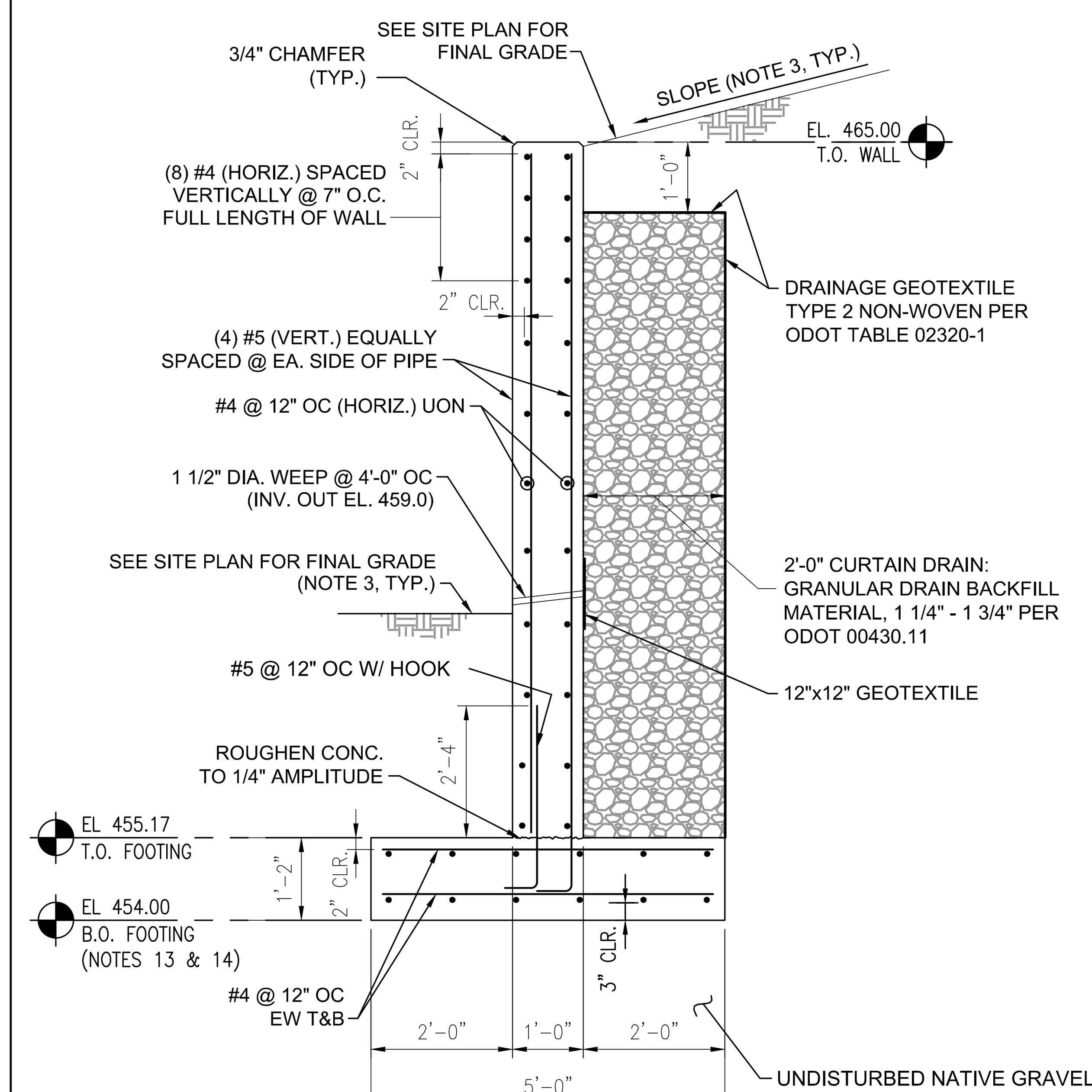

SECTION (A2 / C-14)
NTS

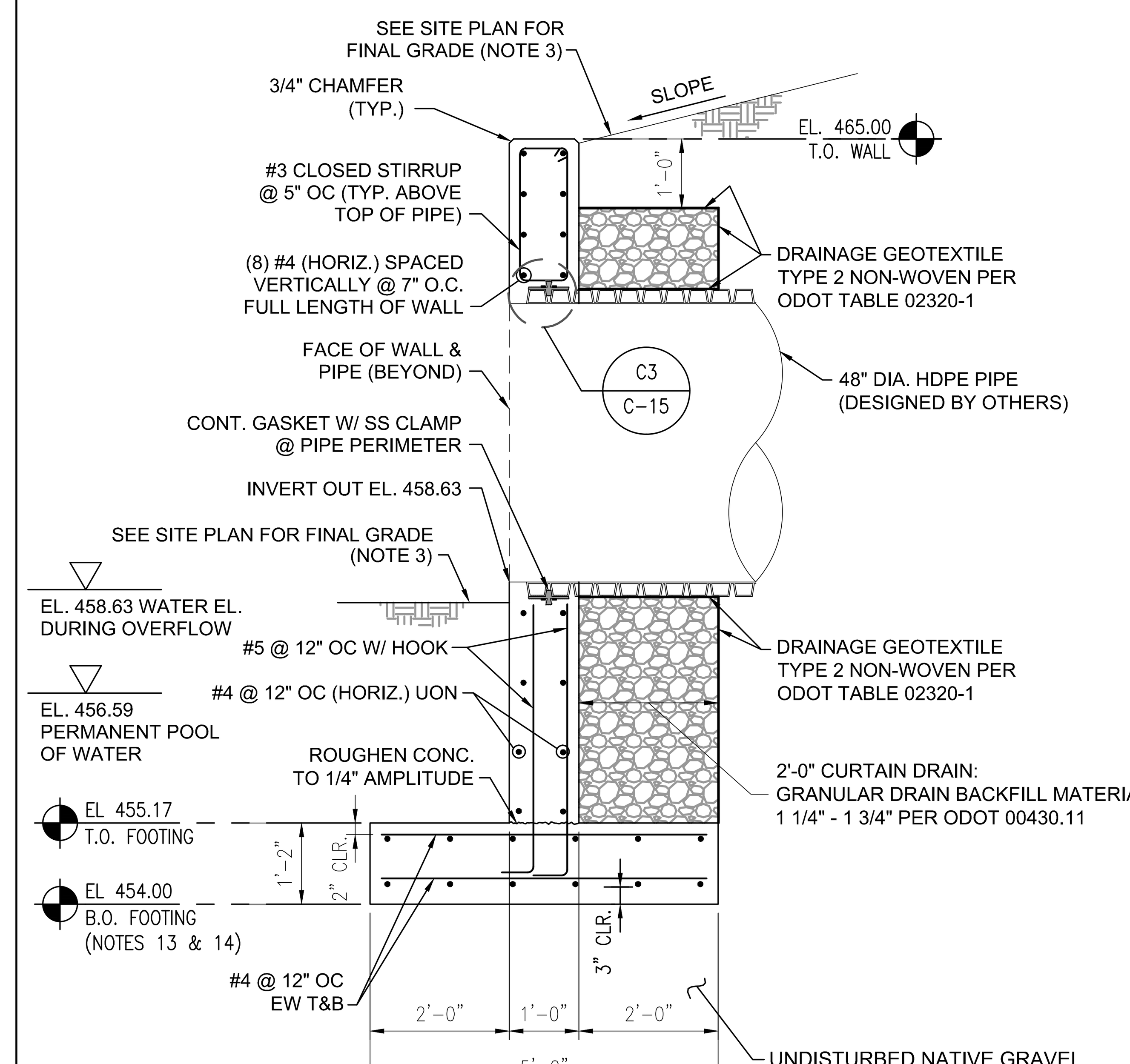

SECTION (A3 / C-14)
NTS

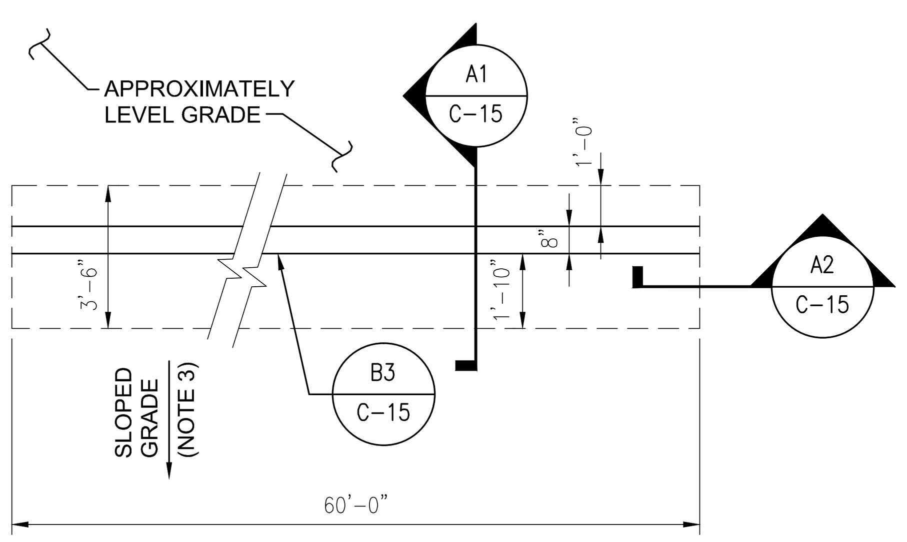

WEIR PLAN (B1 / C-14)
NTS

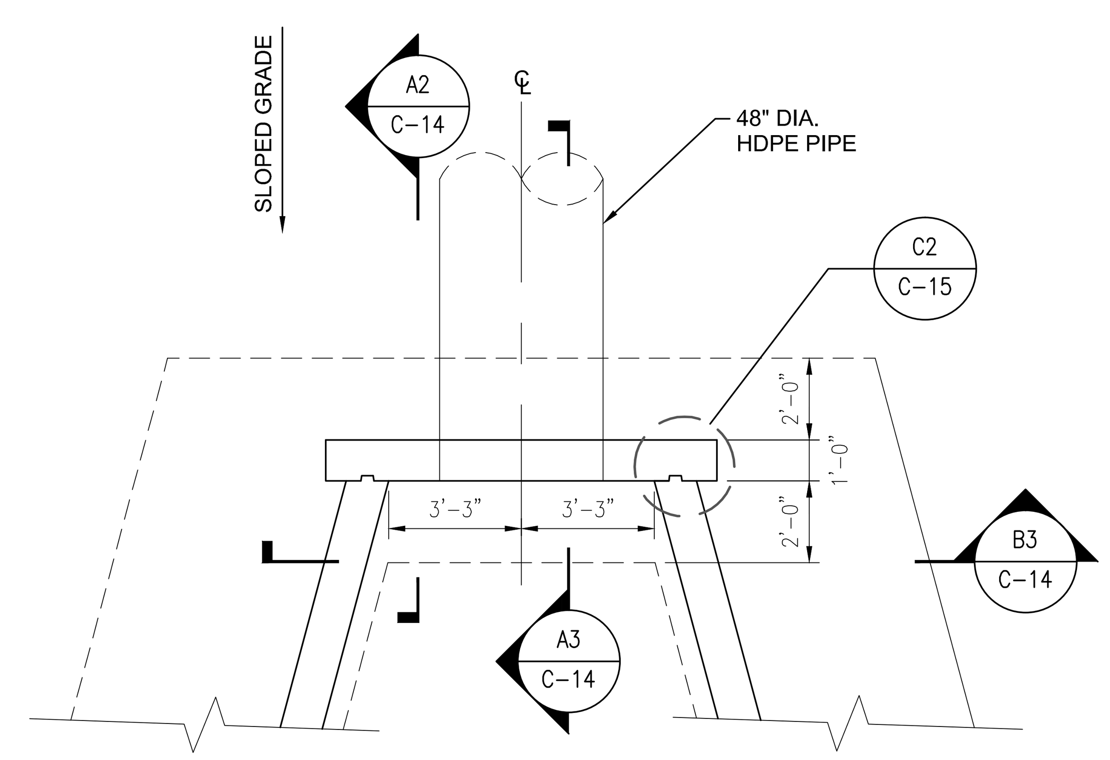

HEAD WALL PART. PLAN (B2 / C-14)
NTS

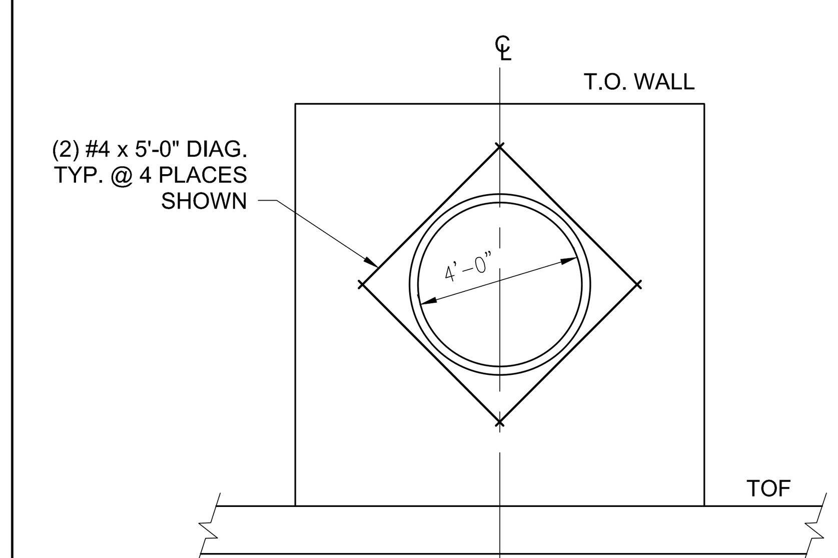

HEAD ELEVATION (B3 / C-14)
NTS

STRUCTURAL NOTES - GENERAL

1. SEE OTHER PROJECT DRAWINGS, SPECIFICATIONS AND CONSTRUCTION DOCUMENTS FOR ADDITIONAL REQUIREMENTS. NOTIFY OWNER'S ENGINEER IMMEDIATELY IF CONFLICTS EXIST.
2. WORK AND MATERIALS SHALL CONFORM TO THE 2009 INTERNATIONAL BUILDING CODE, STATE OF OREGON BUILDING CODES, OTHER APPLICABLE CODES AND STANDARDS, AND SHALL MEET THE REQUIREMENTS OF LOCAL AUTHORITIES HAVING JURISDICTION.
3. SEE OTHER PROJECT DOCUMENTS FOR EROSION PROTECTION AND OTHER REQUIREMENTS AT ALL FINAL GRADE AREAS.
4. THE STRUCTURAL DESIGN IS BASED ON THE FULL INTERACTION OF ALL ITS CONNECTED PARTS. NO PROVISIONS HAVE BEEN MADE FOR ANY TEMPORARY CONDITIONS THAT MAY ARISE. THE CONTRACTOR SHALL BE RESPONSIBLE FOR ADEQUATE DESIGN AND CONSTRUCTION OF ALL FORMS, SHORING, TEMPORARY BRACING, GUYS, AND TIE-DOWNS DURING THE PROGRESS OF THE PROJECT.
5. MAKE NO DEVIATIONS FROM THESE DRAWINGS WITHOUT WRITTEN DIRECTION FROM THE OWNER'S ENGINEER.
6. WORK NOT INDICATED ON A PART OF THE DRAWINGS BUT REASONABLY IMPLIED TO BE SIMILAR TO THAT SHOWN AT CORRESPONDING PLACES SHALL BE INCLUDED.
7. PRE-MANUFACTURED MATERIALS SHALL BE INSTALLED IN ACCORDANCE WITH MANUFACTURER'S REQUIREMENTS AND RECOMMENDATIONS.
8. EXCEPT WHERE SLOPE IS SPECIFIED, NEW MATERIALS SHALL BE INSTALLED PLUMB, LEVEL, AND SQUARE. DO NOT SCALE FROM DRAWINGS.
9. NO FOOTINGS SHALL BE PLACED IN WATER OR ON FROZEN GROUND.
10. TO ENSURE SOIL BELOW FOOTINGS REMAINS UNDISTURBED, EXCAVATOR BUCKET SHALL BE SMOOTH, WITHOUT TEETH; AND THE FINAL THREE INCHES OF SOIL AT THE FOOTINGS SHALL BE EXCAVATED USING HAND EQUIPMENT.
11. ALL CONCRETE MATERIALS, REINFORCEMENT AND FORMS SHALL BE FREE FROM FROST OR DEBRIS.

GEOTECHNICAL REQUIREMENTS

12. STRUCTURAL DESIGN IS BASED ON THE " GEOTECHNICAL ENGINEERING REPORT FOR THE CITY OF SPRINGFIELD MILL RACE STORMWATER FACILITY" IN SPRINGFIELD , OREGON DATED OCTOBER 16, 2014 AS PREPARED BY AMEC ENVIRONMENT & INFRASTRUCTURE, INC. FOR PROJECT NO. 4-61M-127901.
13. THE CONTRACTOR SHALL OBTAIN A COPY OF THE ABOVE REFERENCED GEOTECHNICAL REPORT AND CONFORM WITH THE RECOMMENDATIONS AND REQUIREMENTS CONTAINED THEREIN.
14. WIER, HEADWALL, AND WINGWALLS SHALL BEAR ON SOUND "NATIVE GRAVEL" AS DEFINED IN THE ABOVE REFERENCED GEOTECHNICAL REPORT. FORMWORK SHALL NOT BE PLACED UNTIL OWNER'S GEOTECHNICAL ENGINEER HAS INSPECTED THE UNDISTURBED SUBGRADE AT THE BOTTOM OF FOOTINGS TO VERIFY ADEQUATE NATIVE GRAVEL BEARING SURFACE BELOW CONCRETE STRUCTURES.
15. NOTIFY OWNER'S STRUCTURAL ENGINEER IMMEDIATELY IF SPECIFIED BOTTOM OF FOOTING NEEDS TO BE REVISED.
16. BACKFILL ADJACENT TO FOOTINGS AND WALLS SHALL NOT HAVE MORE THAN 5% FINES (BY WEIGHT) PASSING A NO. 200 SIEVE AND SHALL BE COMPACTED IN 8" LIFTS TO A UNIFORM DENSITY OF 90% OF ITS MAXIMUM DRY DENSITY AS DETERMINED BY ASTM D1557.
17. "CURTAIN DRAIN BACKFILL" BEHIND WALLS SHALL BE CLEAN UNIFORM, WELL-ROUNDED GRAVEL CONFORMING TO "SPECIAL FILTER MATERIAL" PER OREGON DEPARTMENT OF TRANSPORTATION (ODOT) 02610.
18. OTHER BACKFILL ADJACENT TO CONCRETE STRUCTURES SHALL CONFORM TO "OPEN - GRADED AGGREGATE" PER ODOT 02630.11.
19. HAND -OPERATED VIBRATORY COMPACTOR SHALL BE USED WITHIN 3'-0" OF CONCRETE WALLS.
20. GEOTECHNICAL PARAMETERS USED FOR DESIGN:
    - SOIL BEARING CAPACITY (NATIVE GRAVEL): 3000 PSF
    - MINIMUM FROST DEPTH (UNLESS OTHERWISE NOTED) : 1'-6"
    - COMPACTED GRAVEL (BACKFILL) UNIT WEIGHT: 125 PCF
    - FRICTION FACTOR TO RESIST SLIDING: 0.4
    - LATERAL EARTH PRESSURE EQUIVALENT FLUID UNIT WEIGHTS - AS LISTED IN THE GEOTECHNICAL REPORT FOR CORRESPONDING BACKSLOPE ANGLES.
    - LATERAL EARTH PRESSURES WITHIN GEOTECHNICAL REPORT ALREADY CONTAIN SEISMIC LATERAL LOAD SAFETY FACTORS AND THEREFORE NO ADDITIONAL INCREASE IN LATERAL LOADS IS NEEDED TO ACCOMMODATE SEISMIC REQUIREMENTS.
    - PASSIVE PRESSURE LOADS THAT RESIST SLIDING DO NOT APPLY TO SOILS WITHIN 24" OF GROUND SURFACE.
    - EQUIVALENT FLUID WEIGHT OF PASSIVE PRESSURE = 300 PCF.

CONCRETE & STEEL REINFORCEMENT

21. ALL CONCRETE WORK SHALL CONFORM TO THE 2008 EDITION OF THE AMERICAN CONCRETE INSTITUTE (ACI) "BUILDING CODE REQUIREMENTS FOR REINFORCED CONCRETE" (ACI 318-08) AND "SPECIFICATIONS FOR STRUCTURAL CONCRETE FOR BUILDINGS" (ACI 301).
22. ALL CONCRETE FOR WIER, HEADWALL & WINGWALLS SHALL BE MADE WITH 3/4" STONE AGGREGATE (NORMAL WEIGHT ASTM C33); TYPE I OR TYPE II CEMENT (ASTM C150); 4" TO 5" SLUMP AND CONFORM WITH THE FOLLOWING:

	28 DAY COMPRESSIVE STRENGTH	MAXIMUM WATER/ CEMENT RATIO	AIR ENTRAPMENT
FOOTINGS	3000 PSI	0.51	2% - 3%
WALLS	4000 PSI	0.45	5% - 7%

23. CONCRETE MIX DESIGN SHALL BE SUBMITTED TO OWNER'S ENGINEER FOR REVIEW AND APPROVAL OBTAINED PRIOR TO CONSTRUCTION.
24. CONCRETE REINFORCING BARS SHALL CONFORM TO ASTM A615, GRADE 60. REINFORCING BARS SHALL NOT BE WELDED
25. SHOP DRAWINGS FOR STEEL REINFORCING WITHIN CONCRETE SHALL BE SUBMITTED TO OWNER'S ENGINEER FOR REVIEW AND APPROVAL OBTAINED PRIOR TO FABRICATION OF MATERIALS.
26. ALL EMBEDMENTS IN CONCRETE, INCLUDING ANCHOR BOLTS, SHALL BE FIRMLY SECURED BY TIE WIRE TO PREVENT MOVEMENT DURING CONCRETE PLACEMENT.
27. CALCIUM CHLORIDE OR COPPER SHALL NOT BE PLACED IN CONCRETE.
28. CONCRETE SHALL BE MAINTAINED ABOVE 50 DEGREES F, AND IN A MOIST CONDITION FOR AT LEAST THE FIRST SEVEN DAYS AFTER PLACEMENT.
29. CONSOLIDATE ALL CONCRETE WITH A VIBRATOR OR OTHER MEANS RECOMMENDED BY ACI 301.

REGISTERED PROFESSIONAL ENGINEER
80570PE
OREGON
JUNE 02, 2010
DANIEL E. SCHALL
6/5/15
EXP: 6/30/16

100% DESIGN
FINAL DESIGN
ISSUE FOR BID & CONSTRUCTION

Plotted by:MCCARTHY, PATRICK on Friday, June 05, 2015 at 7:09:54 AM from the C14 layout tab
File Name/Path:K:\12000\12700\12790\127901\DWG_100%_DESIGN\C14-C15_STRUCTURAL_DETAILS_100%.DWG

willamalane Park and Recreation District
LANDSCAPE ARCHITECTS SCHIRMER SATRE GROUP

Revisions and Addendums

Description	Date	No.	By
90% DESIGN	11/13/14	1	DP
ISSUED FOR FINAL REVIEW	11/20/14	2	DP
DRAFT 100% DESIGN	5/15/15	3	DS
FINAL 100% DESIGN	6/5/15	4	DS

amec foster wheeler

SPRINGFIELD OREGON
THE CITY OF SPRINGFIELD DEVELOPMENT &PUBLIC WORKS
225 FIFTH STREET
SPRINGFIELD, OREGON 97477
VOICE: 541-726-3753
FAX: 541-726-3689
WWW.SPRINGFIELD-OR.GOV

DESIGN: DP | DRAWN: TP | CHECK: DS | PROJ. NO:P21052 | BID ON:6/10/15

SPRINGFIELD MILL RACE STORMWATER FACILITY, BOOTH KELLY TRAILHEAD & MILL RACE PATH

WEIR, HEADWALL, & WING WALL PLANS & DETAILS

THIS DRAWING IS FULL SIZE WHEN PLOTTED AT 22"x34".

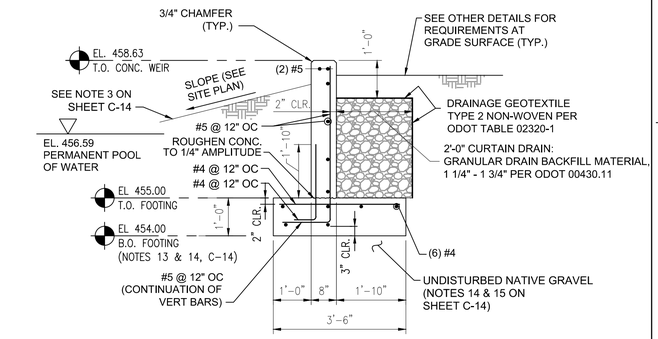

WEIR — A1 / C-15
NTS

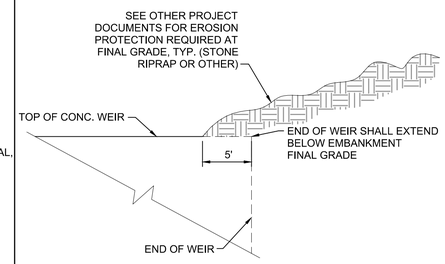

TRENCH BACKFILL — A2 / C-15
NTS

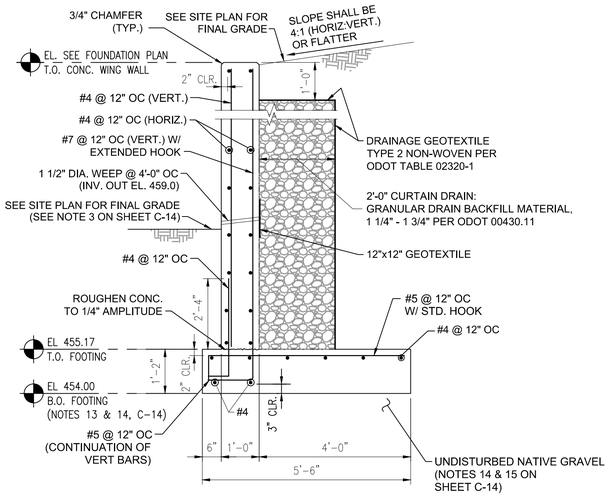

TYPE 2 WING WALL — C1 / C-15
NTS

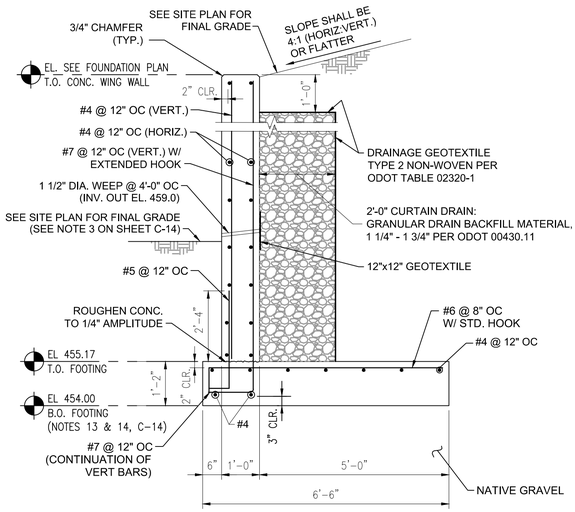

TYPE 1 WING WALL — B1 / C-15
NTS

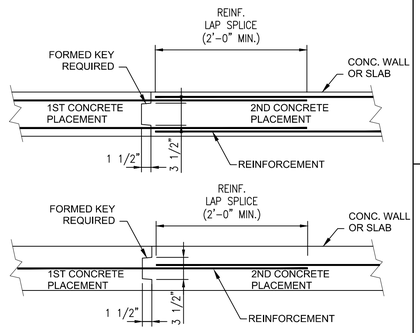

NOTES:

1. EXPOSED REINFORCEMENT FROM FIRST PLACEMENT SHALL BE THOROUGHLY CLEANED PRIOR TO SECOND PLACEMENT.
2. FACE OF HARDENED CONCRETE SHALL BE MOISTENED (WITHOUT PONDING) IMMEDIATELY PRIOR TO SECOND CONCRETE PLACEMENT.
3. LOCATE WALL CONSTRUCTION JOINTS AT WALL CONTROL JOINT LOCATIONS - SEE DETAIL B3 / C-15. PROVIDE SEALANT AT BOTH SIDES OF WALL IN ACCORDANCE WITH DETAIL B3 / C-15.

TYPICAL FOUNDATION WALL CONSTRUCTION JOINT — B2 / C-15
NTS

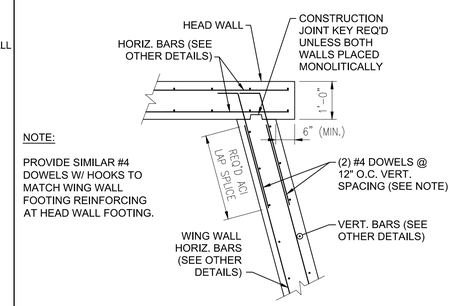

NOTE:

PROVIDE SIMILAR #4 DOWELS W/ HOOKS TO MATCH WING WALL FOOTING REINFORCING AT HEAD WALL FOOTING.

PLAN

DETAIL — C2 / C-15
NTS

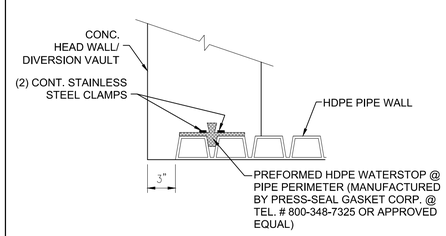

HDPE PIPE OUTLET DETAIL — C3 / C-15
NTS

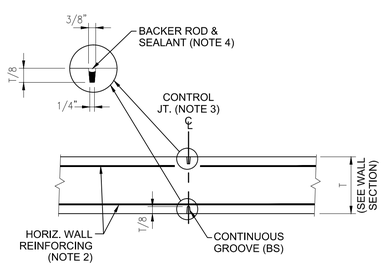

NOTES:

1. WALL CONTROL JOINTS SHALL BE LOCATED AT 30'-0" O.C. MAXIMUM SPACING.
2. CUT AND STOP EVERY OTHER BAR EXTENDING THROUGH CONTROL JOINT.
3. LOCATIONS OF WALL CONTROL JOINTS SHALL BE CLEARLY DIMENSIONED ON REBAR SHOP DRAWINGS.
4. SEALANT SHALL BE SONNEBORN NP-2 OR APPROVED EQUAL.

TYPICAL FOUNDATION WALL CONTROL JOINT — B3 / C-15
NTS

REGISTERED PROFESSIONAL ENGINEER 80570PE OREGON JUNE 02, 2010 DANIEL E. SCHALL
6/5/15
EXP: 6/30/16

100% DESIGN
FINAL DESIGN
ISSUE FOR BID & CONSTRUCTION

willamalane Park and Recreation District

LANDSCAPE ARCHITECTS SCHIRMER SATRE GROUP

Revisions and Addendums			
Description	Date	No.	By
90% DESIGN	11/13/14	1	DP
ISSUED FOR FINAL REVIEW	11/20/14	2	DP
DRAFT 100% DESIGN	5/15/15	3	DS
FINAL 100% DESIGN	6/5/15	4	DS

amec foster wheeler

SPRINGFIELD OREGON

THE CITY OF SPRINGFIELD DEVELOPMENT &PUBLIC WORKS
225 FIFTH STREET
SPRINGFIELD, OREGON 97477
VOICE: 541-726-3753
FAX: 541-726-3689
WWW.SPRINGFIELD-OR.GOV

DESIGN: DP | DRAWN: TP | CHECK: DS | PROJ. NO: P21052 | BID ON: 6/10/15

SPRINGFIELD MILL RACE STORMWATER FACILITY, BOOTH KELLY TRAILHEAD & MILL RACE PATH
WEIR, HEADWALL, & WING WALL DETAILS

SHEET C-15
16 OF 47

THIS DRAWING IS FULL SIZE WHEN PLOTTED AT 22"x34".

Plotted by MCCARTHY, PATRICK on Friday, June 05, 2015 at 7:10:04 AM from the C15 layout tab.
File: Name=P:\0000\12000\12200\12290\LANDL_DESIGN\C14-C15_STRUCTURAL DETAILS_C1000.DWG

MATERIAL SPECIFICATIONS:
HARDWARE & FASTENERS = TYPE 304 SS ASTM–F593 / F594
MILD STEEL = ASTM–A36 W/ 16.0 MILS EPOXY COATING
S–STL STEM = TYPE 304 SS ASTM–A276
S–STL ANCHOR ROD = TYPE 304 SS ASTM–A276
ALUMINUM SHAPES = 6061–T6
ALUMINUM FORMED & PLATE = 6061–T6
ALUMINUM EXTRUSION = 6061–T6
ALUMINUM ROUND BAR = 6063–T5
UHMWPE = ASTM–D4020
NEOPRENE RUBBER = ASTM–D2000
BRONZE = ASTM–B584

SAMPLE DRAWING:

MODEL GH–40 ALUMINUM SLIDE GATE FOR SUBMERGED SERVICE. SHOWN: NON–SELF CONTAINED WITH FACE/WALL MOUNTED FRAME. PEDESTAL MOUNTED BEVEL GEARED LIFT.

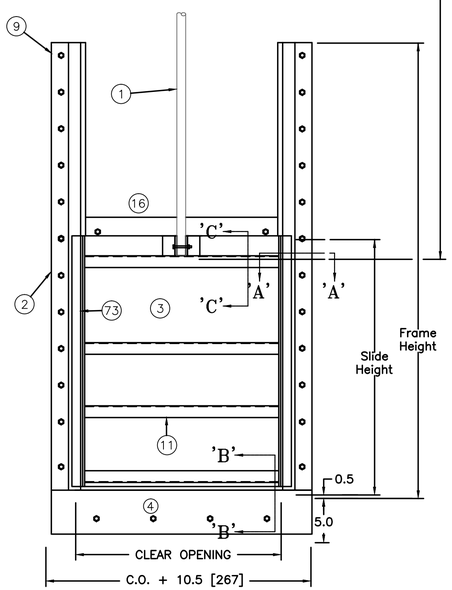

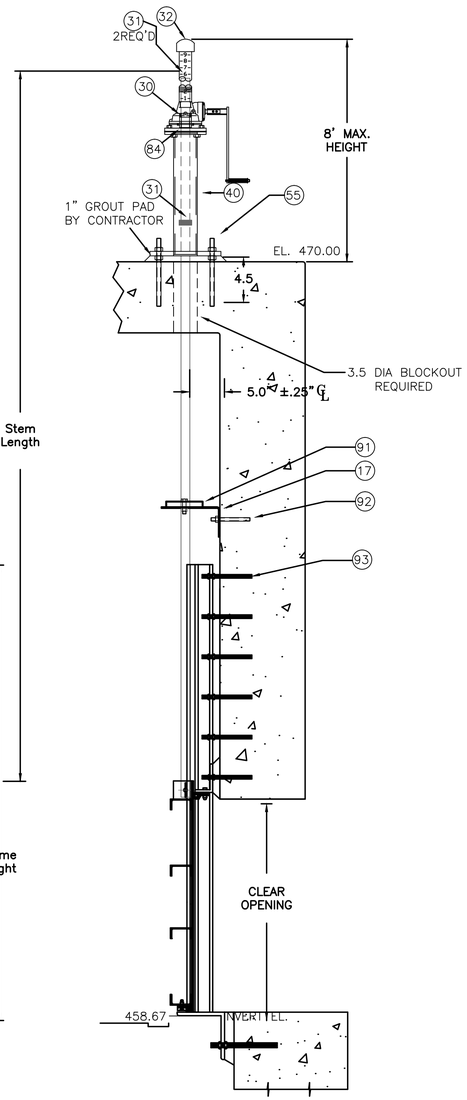

MD GH–40 ALUMINUM SLIDE GATE MATERIAL LIST

	1 STEM	S–STL W/ACME ROLLED THREADS 16 MICRO IN. RMS OR LESS FINISH
11	STIFFENER	ALUMINUM CHANNEL
30	OPERATOR	MD MG–A11 GEAR REDUCTION, CAST STEEL HOUSING, BEVEL GEARS, ROLLER BEARING SUPPORTED BRONZE LIFT NUT, GREASE ZERK, OPEN DIRECTION INDICATOR, MECHANICAL SEALS, HANDCRANK
73	VERT. STIFFENER	ALUMINUM FLAT BAR
190	CENTER STIFFENER	ALUMINUM FLAT BAR
2	GUIDE RAIL	EXTRUDED ALUMINUM, 5 lbs. PER FT. UNI–FLANGE
3	GATE HEAD	1/4" ALUMINUM PLATE
4	INVERT ANGLE	1/4" ALUMINUM ANGLE
*9	ANCHOR BLT	S–STL ANCHOR ROD, W/2 NUTS
15	GUIDE BEARING BAR	UHMW POLYETHYLENE ASTM D–1248 IN DOVETAIL SLOTS PROVIDING OPERATING COEFFICIENT OF 0.125 OR LESS BETWEEN SLIDE AND GATE GUIDE
16	TOP SPIGOT RAIL	3/8" ALUMINUM ANGLE
17	STEM GUIDE TYPE1–8	FORMED SS W/ADJ. UHMW STEM GUIDE BUSHING MACHINED 1/8" OVER STEM DIA.
21	P–SEAL	NEOPRENE RUBBER # 7274
22	P–SEAL RTNR	S–STL FLAT BAR W/SLOTTED HOLES
27	INVERT SEAL	NEOPRENE RUBBER # 7509
28	RETAINER BAR	ALUMINUM FLAT BAR
31	STOP NUTS	BRONZE ASTM B–584
32	STEM COVER	CLEAR BUTYRATE PLASTIC WITH MYLAR STRIP INDICATOR CALIBRATED IN FEET AND INCHES WITH PVC END CAP
40	STR PEDESTAL STD	MILD STEEL
*55	PEDESTAL MNT BOLTS	ANCHOR ROD W/2 NUTS
91	SG BUSHING BOLTS	HEX HEAD BOLT W/ NUTS & LW, (2) 3/8" FW, (1) 1/2" FW
84	OPER. MTG BOLTS	HEX HEAD BOLT W/NUT, F/W & L/W
*92	SG ANCHOR BOLTS	SS ANCHOR ROD W/2 NUTS & FW
*93	SG ANCHOR BOLTS	1/2" DIA. HILTI STUD, 2.5" EMBEDMENT WITH 6" SPACING

* ANCHOR BOLTS ARE DESIGNED FOR USE WITH HILTI HIT–RE 500–SD ADHESIVE INJECTION SYSTEM OR EQUAL (ADHESIVE BY CONTRACTOR)

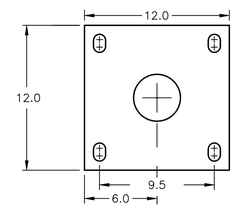

STD. STRAIGHT PED. BASE ANCHOR BOLT LAYOUT

NOTE: FIELD COAT ALUMINUM IN CONTACT WITH CONCRETE WITH BITUMASTIC 50, MIN. 15 MILS DRY OR EQUAL APPLY IN FIELD W/GHI FURNISHED MATERIAL

INSTALLATION NOTES for INSTALLER

FRAME OR FRAME COMPONENTS, PEDESTAL, WALL BRACKET, STEM GUIDE, AND OPERATOR MUST BE INSTALLED FLAT, STRAIGHT AND PLUMB, SHIM AND BRACE AS NECESSARY.

SEE OPERATION & MAINTENANCE MANUAL FOR ADDITIONAL INSTALLATION INFORMATION.

TOLERANCES AS FOLLOWS:

PARALLEL ±1/8"
COPLANER ± 1/8"
FLAT & STRAIGHT ± 1/16"
SQUARE ± 1/8"

GOLDEN HARVEST	
ORIGINAL	–
CHECKED	–
CHECKED	–

THIS DRAWING IS THE PROPERTY OF GOLDEN HARVEST, INC. THE DESIGN, DATA AND INFORMATION CONTAINED WITHIN IS NOT TO BE USED, DISSEMINATED, LOANED OR REPRODUCED IN WHOLE OR IN PART WITHOUT THE WRITTEN CONSENT OF GOLDEN HARVEST, INC.

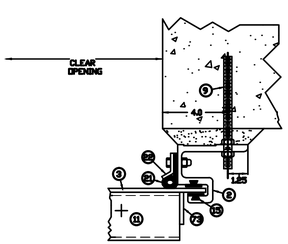

SECTION 'A'–'A'

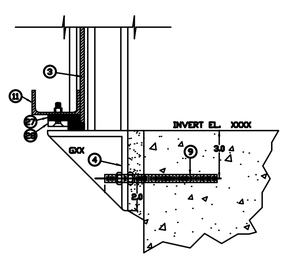

SECTION 'B'–'B'

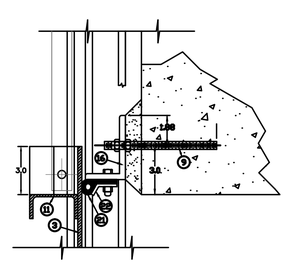

SECTION 'C'–'C'

REGISTERED PROFESSIONAL ENGINEER 80570PE OREGON JUNE 02, 2010 DANIEL E. SCHALL 6/5/15
EXP. 6/30/16

100% DESIGN
FINAL DESIGN
ISSUE FOR BID & CONSTRUCTION

willamalane Park and Recreation District
LANDSCAPE ARCHITECTS SCHIRMER SATRE GROUP

Revisions and Addendums			
Description	Date	No.	By
60% DESIGN	4/7/14	1	DS
REVISED 60% DESIGN	9/12/14	2	DS
90% DESIGN	12/12/14	3	DS
DRAFT 100% DESIGN	5/15/15	4	DS
FINAL 100% DESIGN	6/5/15	5	DS

amec foster wheeler

SPRINGFIELD OREGON

THE CITY OF SPRINGFIELD
DEVELOPMENT & PUBLIC WORKS
225 FIFTH STREET
SPRINGFIELD, OREGON 97477
VOICE: 541–726–3753
FAX: 541–726–3689
WWW.SPRINGFIELD–OR.GOV

DESIGN: DS | DRAWN: PM | CHECK: HM | PROJ. NO: P21052 | BID ON: 6/10/15

SPRINGFIELD MILL RACE STORMWATER FACILITY, BOOTH KELLY TRAILHEAD & MILL RACE PATH

SLIDE GATE SECTIONS & DETAILS

THIS DRAWING IS FULL SIZE WHEN PLOTTED AT 22"x34".

Plotted by/MCCARTHY, PATRICK on Friday, June 05, 2015 at 7:01:29 AM from the C-16 layout tab
File Name/Folder:L:\22000\22100\22250\22250\DWG_1002_GEOM\C12-C25 - SSHEL.\SSEL.dwg

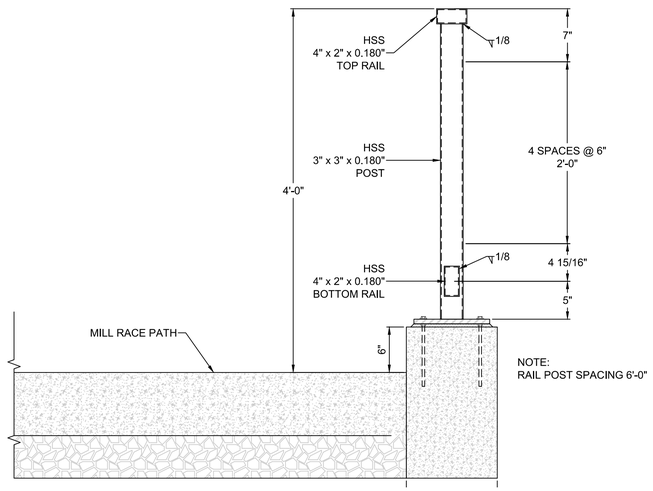

RAIL SECTION ON CURB - BRIDGE (A / C-17)

NTS

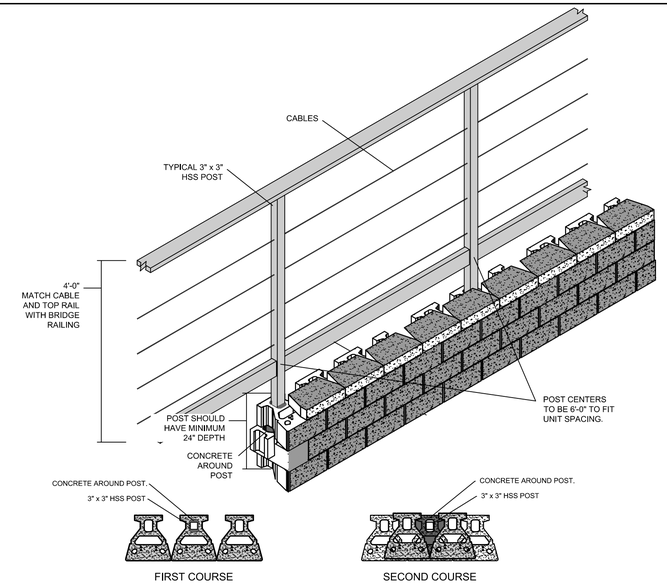

NOTE: REFERENCE SHEET C-19 FOR KEYSTONE WALL DETAILS

RAIL SECTION ON KEYSTONE WALL (F / C-17)

NTS

CABLE RAIL NOTES:

1. ALL CABLE SHALL BE 1x19, TYPE 316 STAINLESS STEEL.
2. MAX. CABLE SEGMENT LENGTH IS 100 FEET.
3. SEGMENT LENGTHS GREATER THAN 50 FEET SHALL HAVE AN ADJUSTABLE THREADED CLEVIS TENSIONER AT EACH END. SHORTER SEGMENTS SHALL HAVE AN ADJUSTABLE THREADED CLEVIS TENSIONER ON ONE END AND A SWAGED CLEVIS ON THE OTHER END. ALL CABLE FITTINGS SHALL BE SWAGED. ONE END WILL NEED TO BE FIELD SWAGED TO ALL THE THREADING OF CABLES THROUGH POSTS.
4. ALL CABLE HARDWARE SHALL BE TYPE 316 STAINLESS STEEL.
5. RAIL AND POST ELEMENTS SHALL BE STRUCTURAL STEEL TUBING MEETING ASTM SPECIFICATION A500 GRADE B. ALL OTHER STRUCTURAL STEEL SHALL MEET THE REQUIREMENTS OF ASTM SPECIFICATION A36.
6. PROVIDE AND INSTALL ASTM A449 THREADED RODS AND HIGH-STRENGTH RESIN FOR RESIN-BONDED ANCHORS. ALL NON-STAINLESS STEEL HARDWARE SHALL BE HOT-DIP GALVANIZED AFTER FABRICATION.
7. STRUCTURAL TUBING RAIL AND POST ASSEMBLIES SHALL BE GALVANIZED IN ACCORDANCE WITH THE SPECIAL PROVISIONS.
8. MITER JOINTS @ TOP RAIL MEMBER, WELD AND GRIND SMOOTH.
9. WELDING SHALL CONFORM TO A.W.S.D1.1 USING E70XX ELECTRODES.

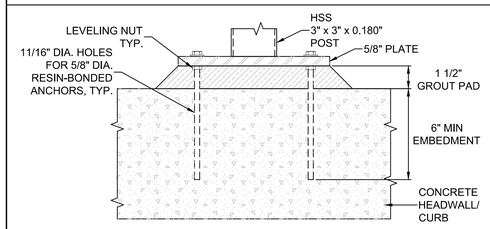

BASE PLATE SECTION DETAIL (B / C-17)

NTS

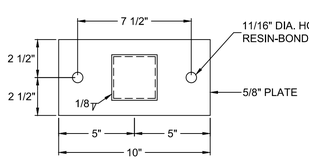

BASE PLATE PLAN DETAIL (C / C-17)

NTS

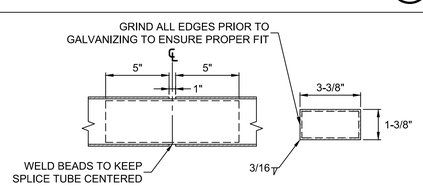

NOTE:

1. MAKE SPLICE TUBE FROM 1/4" PLATE. ONE INCH GAP UNLESS NOTED OTHERWISE ON DETAIL PLANS.

RAIL EXPANSION SPLICE DETAILS (D / C-17)

NTS

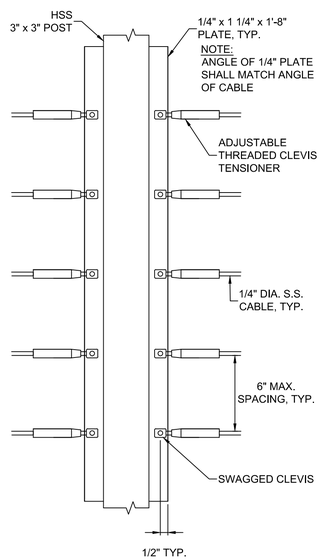

CABLE CONNECTION DETAILS (E / C-17)

NTS

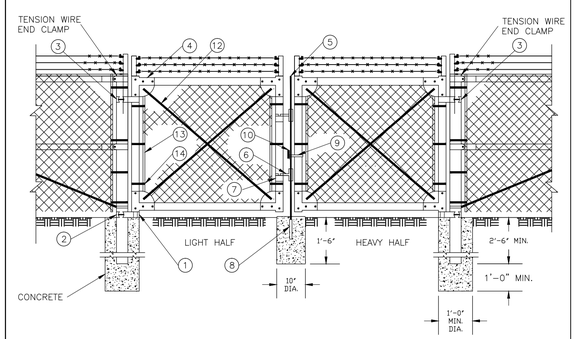

GATE DETAIL

LEGEND

PART NO.	DESCRIPTION	QUANTITY
1	STRAIGHT PLUG	2
2	BOTTOM HINGE	2
3	TOP HINGE	2
4	CORNER ELBOW	8
5	PLUNGER ROD	1
6	LATCH FORK	2
7	FORK CATCH	2
8	PLUNGER ROD CATCH	1
9	LOCK KEEPER GUIDE	1
10	LOCK KEEPER	1
11	ORNAMENTAL TOPS	6
12	TRUSS RODS	4
13	STRETCHER BAR	4
14	HOOK BOLTS	12

NOTE:
THE FENCING SHALL BE #9 GAGE FENCE FABRIC, STANDARD 2-INCH CHAIN LINK DIAMOND MESH.

DIVERSION VAULT COMPOUND GATE DETAIL (G / C-17)

NTS

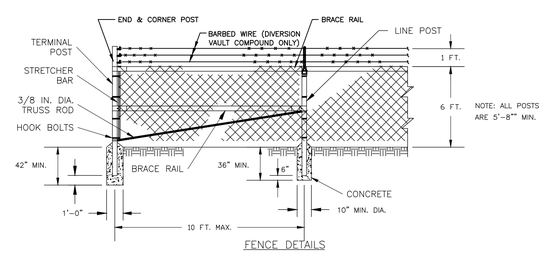

FENCE DETAILS

SHAPE, SIZE AND WEIGHT REQUIREMENTS FOR FENCE POSTS AND RAILS			
ITEM	SHAPE	OUTSIDE DIMENSIONS INCHES	WEIGHT LBS./LIN. FT.
** TERMINAL POSTS	ROUND	2.375	3.65
	*ROUND	2.375	3.12
LINE POSTS	ROUND	1.90	2.72
	*ROUND	1.90	2.28
TOP & BRACE RAILS	ROUND	1.66	2.27
	*ROUND	1.66	1.84
* GRADE B HIGH STRENGTH STEEL			
** INCLUDES END, CORNER, ANGLE, INTERSECTION AND INTERMEDIATE BRACED POSTS			

GATE FRAME MEMBERS SIZE AND WEIGHT		
GATE FRAME	OUTSIDE DIMENSIONS INCHES	WEIGHT LBS./LIN. FT.
ROUND	1.66	2.27
*ROUND	1.66	1.84
* GRADE B HIGH STRENGTH STEEL		

GATE POST SIZE AND WEIGHT		
GATE LEAF WIDTH OF 6 FT. OR LESS	OUTSIDE DIMENSIONS INCHES	WEIGHT LBS./LIN. FT.
ROUND	2.875	5.79
*ROUND	2.875	4.64
* GRADE B HIGH STRENGTH STEEL		

CONSTRUCTION NOTES

1. MATERIALS AND WORKMANSHIP NOT SHOWN ON THIS DRAWING SHALL CONFORM TO THE MANUFACTURER'S SPECIFICATIONS.
2. ALL POSTS SHALL BE INSTALLED VERTICALLY. WHERE POSTS ARE INSTALLED ON AN INCLINED SURFACE, THE ANGLE OF THE POST SHALL BE ADJUSTED SO THAT THE POST WILL BE VERTICAL.
3. THE FENCING SHALL BE #9 GAGE FENCE FABRIC, STANDARD 2-INCH CHAIN LINK DIAMOND MESH.

FENCE DETAIL (TYP.) (H / C-17)

NTS

REGISTERED PROFESSIONAL ENGINEER
80570PE
OREGON
JUNE 02, 2010
DANIEL E. SCHALL
6/5/15
EXP: 6/30/16

100% DESIGN
FINAL DESIGN
ISSUE FOR BID & CONSTRUCTION

Revisions and Addendums

Description	Date	No.	By
60% DESIGN	4/7/14	1	DS
REVISED 60% DESIGN	9/12/14	2	DS
90% DESIGN	12/12/14	3	DS
DRAFT 100% DESIGN	5/15/15	4	DS
FINAL 100% DESIGN	6/5/15	5	DS

DESIGN: DS | DRAWN: PM | CHECK: HM | PROJ. NO: P21052 | BID ON: 6/10/15

THE CITY OF SPRINGFIELD
DEVELOPMENT & PUBLIC WORKS
225 FIFTH STREET
SPRINGFIELD, OREGON 97477
VOICE: 541-726-3753
FAX: 541-726-3689
WWW.SPRINGFIELD-OR.GOV

SPRINGFIELD MILL RACE STORMWATER FACILITY, BOOTH KELLY TRAILHEAD & MILL RACE PATH

RAILING AND FENCE DETAILS

SHEET C-17

THIS DRAWING IS FULL SIZE WHEN PLOTTED AT 22"x34".

Plotted by/MCCARTHY, PATRICK on Friday, June 05, 2015 at 7:01:38 AM from the C-17 layout tab
File: Home/Projects/112080/112080/112080/112080/L-100-DESIGN/C17-C20 - SPSHALL 100%.dwg

NOTES

GENERAL NOTES:

1. THIS BRIDGE HAS BEEN DESIGNED FOR GENERAL SITE CONDITIONS. THE CONTRACTOR AND BRIDGE ENGINEER SHALL BE RESPONSIBLE FOR THE STRUCTURE'S SUITABILITY TO THE EXISTING SITE CONDITIONS AND CONFIRMATION OF SOIL CONDITIONS.

2. PRIOR TO CONSTRUCTION, CONTRACTOR MUST VERIFY ALL ELEVATIONS SHOWN THROUGH THE ENGINEER.

3. ONLY CONTECH ENGINEERED SOLUTIONS LLC, THE CON/SPAN® APPROVED PRECASTER IN OREGON MAY PROVIDE THE STRUCTURE DESIGNED IN ACCORDANCE WITH THESE PLANS.

4. THE USE OF ANOTHER PRECAST STRUCTURE WITH THE DESIGN ASSUMPTIONS USED FOR THE CON/SPAN® STRUCTURE MAY LEAD TO SERIOUS DESIGN ERRORS. USE OF ANY OTHER PRECAST STRUCTURE WITH THIS DESIGN AND DRAWINGS VOIDS ANY CERTIFICATION OF THIS DESIGN AND WARRANTY. CONTECH ENGINEERED SOLUTIONS, LLC ASSUMES NO LIABILITY FOR DESIGN OF ANY ALTERNATE OR SIMILAR TYPE STRUCTURES.

5. ALTERNATE STRUCTURES MAY BE CONSIDERED, PROVIDED THAT DRAWINGS AND CALCULATIONS SIGNED AND SEALED BY A PROFESSIONAL ENGINEER, REGISTERED IN THE STATE OF OREGON, EMPLOYED BY THE PRECAST CONCRETE BRIDGE SUPPLIER, ARE SUBMITTED TO THE ENGINEER 1 WEEK PRIOR TO THE BID DATE FOR REVIEW AND APPROVAL.

6. ALTERNATE STRUCTURES MAY BE CONSIDERED, PROVIDED THAT THE ALTERNATE DESIGN DOES NOT REDUCE THE HYDRAULIC OPENING OF THE STRUCTURE AS SHOWN ON THE DRAWINGS. AT A MINIMUM THE ALTERNATE STRUCTURE MUST PROVIDE THE SAME OR LARGER SPAN AND RISE AS THE STRUCTURE SHOWN ON THE DRAWINGS.

7. SUPPLIER OF PROPOSED ALTERNATES TO A CON/SPAN® BRIDGE SYSTEM MUST SUBMIT AT LEAST TWO (2) INDEPENDENTLY VERIFIED FULL SCALE LOAD TESTS THAT CONFIRM THE PROPOSED DESIGN METHODOLOGY OF THE THREE SIDED/ARCH STRUCTURE(S). THE PROPOSED ALTERNATE, UPON SATISFACTORY CONFIRMATION OF DESIGN METHODOLOGY, MAY BE CONSIDERED AN ACCEPTABLE ALTERNATE.

8. PROPOSED ALTERNATE STRUCTURES MAY BE CONSIDERED, PROVIDED THAT THE PRECAST CONCRETE BRIDGE STRUCTURES ARE PROVIDED BY A SUPPLIER THAT HAS A MINIMUM OF TWO (2) REGISTERED PROFESSIONAL ENGINEERS ON STAFF THAT ARE DEDICATED TO THE DESIGN OF THESE TYPES OF STRUCTURES. SUPPLIER MUST PROVIDE THESE NAMES, P.E. LICENSE NUMBERS AND DATES OF HIRE AT TIME OF ALTERNATE SUBMITTAL.

9. CONTRACTOR REQUIRED TO SUBMIT STAMPED SHOP DRAWINGS TO OWNER & ENGINEER FOR APPROVAL PRIOR TO ORDERING MATERIALS.

DESIGN DATA

DESIGN LOADING:
- BRIDGE UNITS: HS20
- HEADWALLS: EARTH PRESSURE ONLY
- WINGWALLS: EARTH PRESSURE ONLY

DESIGN FILL HEIGHT: 1'-9" MIN. TO 2'-0" MAX.
FROM TOP OF CROWN TO TOP OF PAVEMENT.
DESIGN METHOD: LOAD RESISTANCE FACTOR DESIGN PER AASHTO LRFD SPECIFICATION
ASSUMED NOMINAL BEARING RESISTANCE: XXXX PSF*
ASSUMED FACTORED BEARING RESISTANCE: 12,000 PSF*

*REFERENCE PROJECT BRIDGE GEOTECHNICAL REPORT. IT IS THE CONTRACTOR'S RESPONSIBILITY TO VERIFY THAT THE ACTUAL SITE CONDITIONS AT THE TIME OF CONSTRUCTION ARE CONSISTENT WITH THE ALLOWABLE SOIL BEARING PRESSURE.

MATERIALS

PRECAST UNITS SHALL BE CONSTRUCTED AND INSTALLED IN ACCORDANCE WITH CON/SPAN® SPECIFICATIONS. CONCRETE FOR FOOTINGS SHALL HAVE A MINIMUM COMPRESSIVE STRENGTH OF 4000 PSI. REINFORCING STEEL FOR FOOTINGS SHALL CONFORM TO ASTM A615 OR A996-GRADE 60.

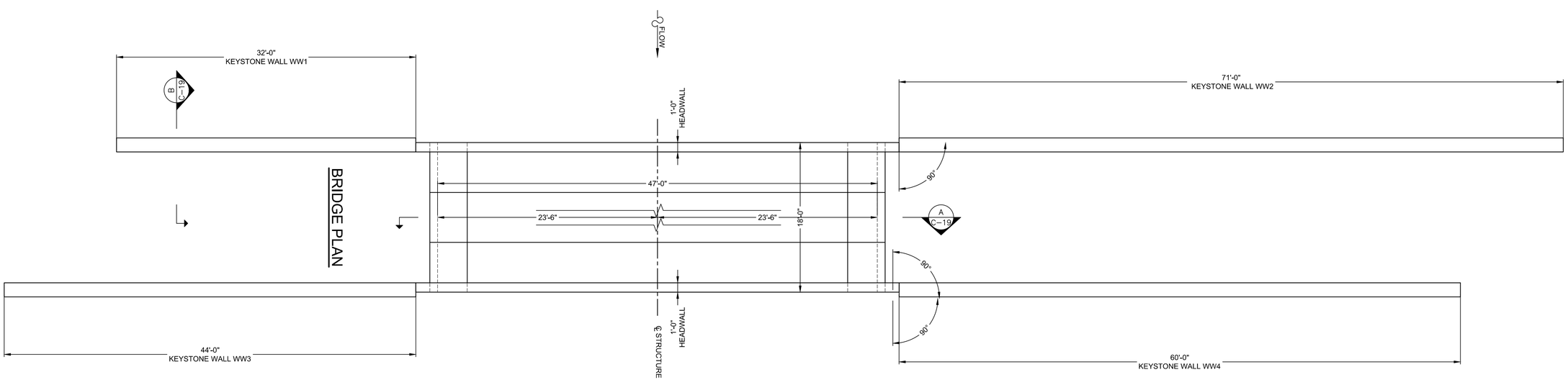

REGISTERED PROFESSIONAL ENGINEER 80570PE OREGON JUNE 02, 2010 DANIEL E. SCHALL 6/5/15
EXP: 6/30/16

MILL RACE BRIDGE - PLAN VIEW (A / C-18)
NTS

100% DESIGN
FINAL DESIGN
ISSUE FOR BID & CONSTRUCTION

Revisions and Addendums			
Description	Date	No.	By
60% DESIGN	4/7/14	1	DS
REVISED 60% DESIGN	9/12/14	2	DS
90% DESIGN	12/12/14	3	DS
DRAFT 100% DESIGN	5/15/15	4	DS
FINAL 100% DESIGN	6/5/15	5	DS

DESIGN: DS | DRAWN: PM | CHECK: HM | PROJ. NO: P21052 | BID ON: 6/10/15

THE CITY OF SPRINGFIELD
DEVELOPMENT & PUBLIC WORKS
225 FIFTH STREET
SPRINGFIELD, OREGON 97477
VOICE: 541-726-3753
FAX: 541-726-3689
WWW.SPRINGFIELD-OR.GOV

SPRINGFIELD MILL RACE STORMWATER FACILITY, BOOTH KELLY TRAILHEAD & MILL RACE PATH

MILL RACE PATH & BRIDGE DETAILS I

THIS DRAWING IS FULL SIZE WHEN PLOTTED AT 22"x34".

Plotted by/MCCARTHY, PATRICK on Friday, June 05, 2015 at 7:01:41 AM from the C-18 layout tab
File: Home/Projects/12260/12250/12290/12300/Dwgs/L-100-DESIGN/012-C-25 - BRIDGE L100B.dwg

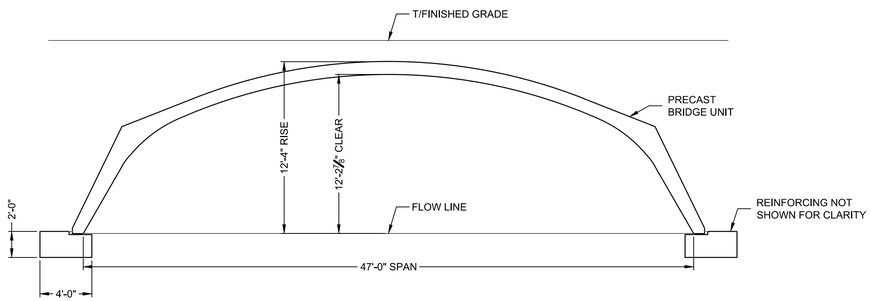

SECTION A / C-19
NTS

Note:
1. Railing not shown for clarity.

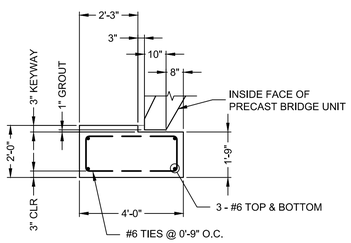

DETAIL C / C-19
NTS

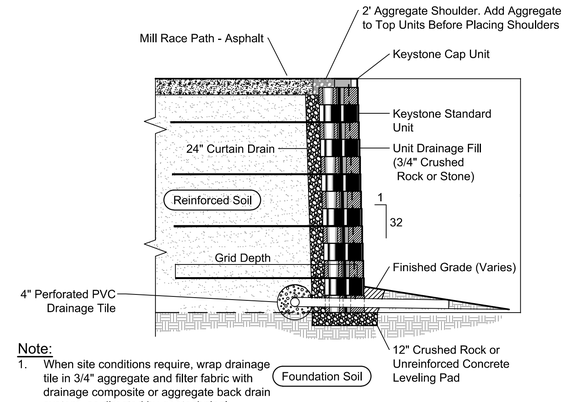

Note:
1. When site conditions require, wrap drainage tile in 3/4" aggregate and filter fabric with drainage composite or aggregate back drain system, as directed by geotechnical engineer.
2. Railing not shown for clarity.

Typical Reinforced Wall Section

Standard Unit - Near Vertical Setback

SECTION B / C-19
NTS

Base Leveling Pad Notes:

1. The leveling pad is to be constructed of crushed stone or 2,000 psi± unreinforced concrete
2. The base foundation is to be approved by the site geotechnical engineer prior to placement of the leveling pad.

Standard Unit	
Width:	18"
*Depth:	18"
Height:	8"
*Weight:	108 lbs

Cap Unit	
Width:	18"
*Depth:	10 1/2"
Height:	4"
*Weight:	50 lbs

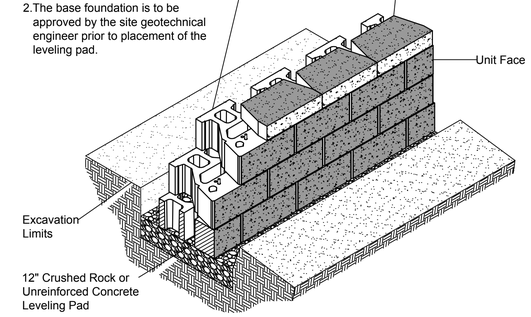

Standard Unit/Base Pad Isometric Section View

* Dimensions & Weight May Vary by Region

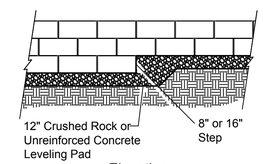

Elevation

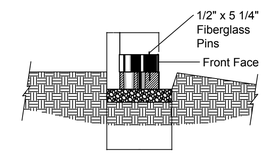

Section

Note:
1. The leveling pad is to be constructed of crushed stone or 2000 psi ± unreinforced concrete.

Leveling Pad Detail

NOTE:
1. INSTALL EXPANSION JOINT FILLER BETWEEN CONCRETE HEADWALL & KEYSTONE WALL.
2. WRAP 2' MIN. GEOTEXTILE FABRIC AT CONCRETE HEADWALL & KEYSTONE WALL.

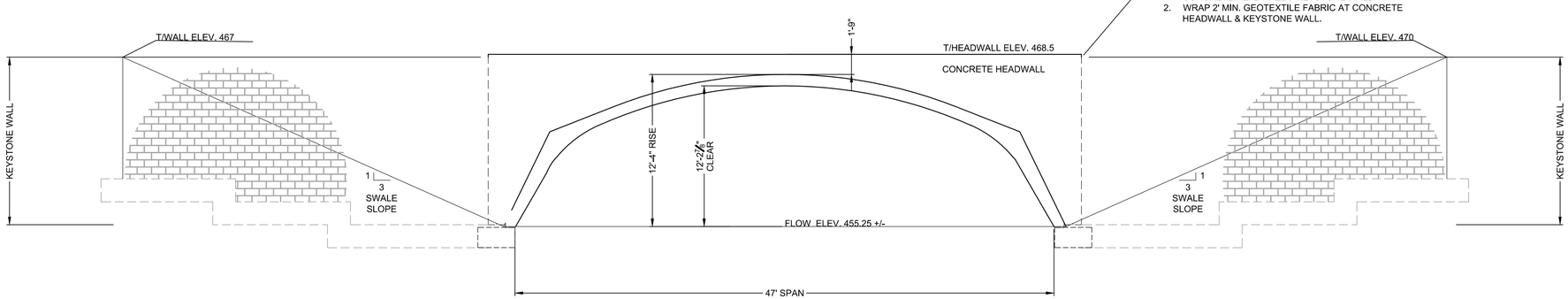

Note:
1. Railing not shown for clarity.

TYPICAL END ELEVATION

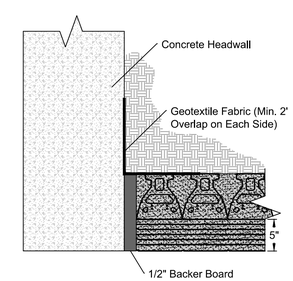

EXPANSION JOINT - PLAN VIEW E / C-19

MILL RACE BRIDGE - SECTION VIEW D / C-19
NTS

100% DESIGN
FINAL DESIGN
ISSUE FOR BID & CONSTRUCTION

REGISTERED PROFESSIONAL ENGINEER 80570PE OREGON JUNE 02, 2010 DANIEL E. SCHALL
6/5/15
EXP: 6/30/16

willamalane Park and Recreation District

LANDSCAPE ARCHITECTS SCHIRMER SATRE GROUP

Revisions and Addendums			
Description	Date	No.	By
60% DESIGN	4/7/14	1	DS
REVISED 60% DESIGN	9/12/14	2	DS
90% DESIGN	12/12/14	3	DS
DRAFT 100% DESIGN	5/15/15	4	DS
FINAL 100% DESIGN	6/5/15	5	DS

amec foster wheeler

SPRINGFIELD OREGON

THE CITY OF SPRINGFIELD
DEVELOPMENT & PUBLIC WORKS
225 FIFTH STREET
SPRINGFIELD, OREGON 97477
VOICE: 541-726-3753
FAX: 541-726-3689
WWW.SPRINGFIELD-OR.GOV

DESIGN: DS | DRAWN: PM | CHECK: HM | PROJ. NO: P21052 | BID ON: 6/10/15

SPRINGFIELD MILL RACE STORMWATER FACILITY, BOOTH KELLY TRAILHEAD & MILL RACE PATH

MILL RACE PATH & BRIDGE DETAILS II

SHEET C-19
20 OF 47

THIS DRAWING IS FULL SIZE WHEN PLOTTED AT 22"x34".

Plotted by/CASARTHY, PATRICK on Friday, June 05, 2015 at 7:51:47 AM from the C-19.dgnpt 8x8
File Name/Pubwks\12260\12260\12260\12260\Level_1\MR_Bridges\02-C20 - DETAILS_1004.dgn

SPECIFICATIONS FOR MANUFACTURE AND INSTALLATION OF CON/SPAN® O-SERIES BRIDGE SYSTEMS

1. DESCRIPTION
   - 1.1. TYPE - THIS WORK SHALL CONSIST OF FURNISHING AND CONSTRUCTING A CON/SPAN® O-SERIES BRIDGE SYSTEM IN ACCORDANCE WITH THESE SPECIFICATIONS AND IN REASONABLY CLOSE CONFORMITY WITH THE LINES, GRADES, DESIGN AND DIMENSIONS SHOWN ON THE PLANS OR AS ESTABLISHED BY THE ENGINEER. IN SITUATIONS WHERE TWO OR MORE SPECIFICATIONS APPLY TO THIS WORK, THE MOST STRINGENT REQUIREMENTS SHALL GOVERN.
   - 1.2. DESIGNATION - PRECAST REINFORCED CONCRETE CON/SPAN® O-SERIES BRIDGE UNITS MANUFACTURED IN ACCORDANCE WITH THIS SPECIFICATION SHALL BE DESIGNATED BY SPAN AND RISE. PRECAST REINFORCED CONCRETE WINGWALLS AND HEADWALLS MANUFACTURED IN ACCORDANCE WITH THIS SPECIFICATION SHALL BE DESIGNATED BY LENGTH, HEIGHT, AND DEFLECTION ANGLE. PRECAST REINFORCED CONCRETE EXPRESS™ FOUNDATION UNITS MANUFACTURED IN ACCORDANCE WITH THIS SPECIFICATION SHALL BE DESIGNATED BY LENGTH, HEIGHT AND WIDTH.

2. DESIGN
   - 2.1. SPECIFICATIONS - THE PRECAST ELEMENTS ARE DESIGNED IN ACCORDANCE WITH THE "STANDARD SPECIFICATIONS FOR HIGHWAY BRIDGES" 17TH EDITION, ADOPTED BY THE AMERICAN ASSOCIATION OF STATE HIGHWAY AND TRANSPORTATION OFFICIALS, 2002. A MINIMUM OF ONE FOOT OF COVER ABOVE THE CROWN OF THE BRIDGE UNITS IS REQUIRED IN THE INSTALLED CONDITION. (UNLESS NOTED OTHERWISE ON THE SHOP DRAWINGS AND DESIGNED ACCORDINGLY.)

3. MATERIALS
   - 3.1. CONCRETE - THE CONCRETE FOR THE PRECAST ELEMENTS SHALL BE AIR-ENTRAINED WHEN INSTALLED IN AREAS SUBJECT TO FREEZE-THAW CONDITIONS, COMPOSED OF PORTLAND CEMENT, FINE AND COARSE AGGREGATES, ADMIXTURES AND WATER. AIR-ENTRAINED CONCRETE SHALL CONTAIN 6 ± 2 PERCENT AIR. THE AIR- ENTRAINING ADMIXTURE SHALL CONFORM TO AASHT0 M154. THE MINIMUM CONCRETE COMPRESSIVE STRENGTH SHALL BE AS SHOWN ON THE SHOP DRAWINGS.
     - 3.1.1. PORTLAND CEMENT - SHALL CONFORM TO THE REQUIREMENTS OF ASTM SPECIFICATIONS C150-TYPE I, TYPE II, OR TYPE III CEMENT.
     - 3.1.2. COARSE AGGREGATE - SHALL CONSIST OF STONE HAVING A MAXIMUM SIZE OF 1 INCH. AGGREGATE SHALL MEET REQUIREMENTS FOR ASTM C33.
     - 3.1.3. WATER REDUCING ADMIXTURE - THE MANUFACTURER MAY SUBMIT, FOR APPROVAL BY THE ENGINEER, A WATER-REDUCING ADMIXTURE FOR THE PURPOSE OF INCREASING WORKABILITY AND REDUCING THE WATER REQUIREMENT FOR THE CONCRETE.
     - 3.1.4. CALCIUM CHLORIDE - THE ADDITION TO THE MIX OF CALCIUM CHLORIDE OR ADMIXTURES CONTAINING CALCIUM CHLORIDE WILL NOT BE PERMITTED.
     - 3.1.5. MIXTURE - THE AGGREGATES, CEMENT AND WATER SHALL BE PROPORTIONED AND MIXED IN A BATCH MIXER TO PRODUCE A HOMOGENEOUS CONCRETE MEETING THE STRENGTH REQUIREMENTS OF THIS SPECIFICATION. THE PROPORTION OF PORTLAND CEMENT IN THE MIXTURE SHALL NOT BE LESS THAN 564 POUNDS (6 SACKS) PER CUBIC YARD OF CONCRETE.
   - 3.2. STEEL REINFORCEMENT
     - 3.2.1. THE MINIMUM STEEL YIELD STRENGTH SHALL BE 60,000 PSI, UNLESS OTHERWISE NOTED ON THE SHOP DRAWINGS.
     - 3.2.2. ALL REINFORCING STEEL FOR THE PRECAST ELEMENTS SHALL BE FABRICATED AND PLACED IN ACCORDANCE WITH THE DETAILED SHOP DRAWINGS SUBMITTED BY THE MANUFACTURER.
     - 3.2.3. REINFORCEMENT SHALL CONSIST OF WELDED WIRE FABRIC CONFORMING TO ASTM SPECIFICATION A 185 OR A 497, OR DEFORMED BILLET STEEL BARS CONFORMING TO ASTM SPECIFICATION A 615, GRADE 60. LONGITUDINAL DISTRIBUTION REINFORCEMENT MAY CONSIST OF WELDED WIRE FABRIC OR DEFORMED BILLET-STEEL BARS.
   - 3.3. STEEL HARDWARE
     - 3.3.1. BOLTS AND THREADED RODS FOR KEYSTONE WALL CONNECTIONS SHALL CONFORM TO ASTM A 307. NUTS SHALL CONFORM TO AASHTO M292 (ASTM A194) GRADE 2H. ALL BOLTS, THREADED RODS AND NUTS USED IN KEYSTONE WALL CONNECTIONS SHALL BE MECHANICALLY ZINC COATED IN ACCORDANCE WITH ASTM B695 CLASS 50.
     - 3.3.2. STRUCTURAL STEEL FOR KEYSTONE WALL CONNECTION PLATES AND PLATE WASHERS SHALL CONFORM TO AASHTO M 270 (ASTM A 709) GRADE 36 AND SHALL BE HOT DIP GALVANIZED AS PER AASHTO M111 (ASTM A123).
     - 3.3.3. INSERTS FOR WINGWALLS SHALL BE 1" DIAMETER TWO-BOLT PRESET KEYSTONE WALL ANCHORS AS MANUFACTURED BY DAYTON SUPERIOR CONCRETE ACCESSORIES, MIAMISBURG, OHIO, (800) 745-3700 AND SHALL BE MECHANICALLY ZINC COATED IN ACCORDANCE WITH ASTM B695 CLASS 50.
     - 3.3.4. FERRULE LOOP INSERTS SHALL BE F-64 FERRULE LOOP INSERTS AS MANUFACTURED BY DAYTON SUPERIOR CONCRETE ACCESSORIES, MIAMISBURG, OHIO, (800) 745-3700.
     - 3.3.5. HOOK BOLTS USED IN ATTACHED HEADWALL CONNECTIONS SHALL BE ASTM A307.
     - 3.3.6. INSERTS FOR DETACHED HEADWALL CONNECTIONS SHALL BE AISI TYPE 304 STAINLESS STEEL, EXPANDED COIL INSERTS AS MANUFACTURED BY DAYTON SUPERIOR CONCRETE ACCESSORIES, MIAMISBURG, OHIO, (800) 745-3700. COIL RODS AND NUTS USED IN HEADWALL CONNECTIONS SHALL BE AISI TYPE 304 STAINLESS STEEL. WASHERS USED IN HEADWALL CONNECTIONS SHALL BE EITHER AISI TYPE 304 STAINLESS STEEL PLATE WASHERS OR AASHTO M270 (ASTM A709) GRADE 36 PLATE WASHERS HOT DIP GALVANIZED AS PER AASHTO M111 (ASTM A123).
     - 3.3.7. MECHANICAL SPLICES OF REINFORCING BARS SHALL BE MADE USING THE DOWEL BAR SPLICER SYSTEM AS MANUFACTURED BY DAYTON SUPERIOR CONCRETE ACCESSORIES, MIAMISBURG, OHIO, (800) 745-3700, AND SHALL CONSIST OF THE DOWEL BAR SPLICER (DB-SAE) AND DOWEL-IN (DI).

4. MANUFACTURE OF PRECAST ELEMENTS - SUBJECT TO THE PROVISIONS OF SECTION 5, BELOW, THE PRECAST ELEMENT DIMENSION AND REINFORCEMENT DETAILS SHALL BE AS PRESCRIBED IN THE PLAN AND SHOP DRAWINGS PROVIDED BY THE MANUFACTURER.
   - 4.1. FORMS - THE FORMS USED IN MANUFACTURE SHALL BE SUFFICIENTLY RIGID AND ACCURATE TO MAINTAIN THE REQUIRED PRECAST ELEMENT DIMENSIONS WITHIN THE PERMISSIBLE VARIATIONS GIVEN IN SECTION 5 OF THESE SPECIFICATIONS. ALL CASTING SURFACES SHALL BE OF A SMOOTH MATERIAL.
   - 4.2. PLACEMENT OF REINFORCEMENT
     - 4.2.1. PLACEMENT OF REINFORCEMENT IN PRECAST BRIDGE UNITS - THE COVER OF CONCRETE OVER THE OUTSIDE CIRCUMFERENTIAL REINFORCEMENT SHALL BE 2" MINIMUM. THE COVER OF CONCRETE OVER THE INSIDE CIRCUMFERENTIAL REINFORCEMENT SHALL BE 1½" MINIMUM, UNLESS OTHERWISE NOTED ON THE SHOP DRAWINGS. THE CLEAR DISTANCE OF THE END CIRCUMFERENTIAL WIRES SHALL NOT BE LESS THAN 1" NOR MORE THAN 2" FROM THE ENDS OF EACH SECTION. REINFORCEMENT SHALL BE ASSEMBLED UTILIZING SINGLE OR MULTIPLE LAYERS OF WELDED WIRE FABRIC (NOT TO EXCEED 3 LAYERS), SUPPLEMENTED WITH A SINGLE LAYER OF DEFORMED BILLET-STEEL BARS, WHEN NECESSARY. WELDED WIRE FABRIC SHALL BE COMPOSED OF CIRCUMFERENTIAL AND LONGITUDINAL WIRES MEETING THE SPACING REQUIREMENTS OF 4.3, BELOW, AND SHALL CONTAIN SUFFICIENT LONGITUDINAL WIRES EXTENDING THROUGH THE BRIDGE UNIT TO MAINTAIN THE SHAPE AND POSITION OF THE REINFORCEMENT. LONGITUDINAL DISTRIBUTION REINFORCEMENT MAY BE WELDED WIRE FABRIC OR DEFORMED BILLET-STEEL BARS AND SHALL MEET THE SPACING REQUIREMENTS OF 4.3, BELOW. THE ENDS OF THE LONGITUDINAL DISTRIBUTION REINFORCEMENT SHALL BE NOT MORE THAN 3" AND NOT LESS THAN 1½" FROM THE ENDS OF THE BRIDGE UNIT.
     - 4.2.2. BENDING OF REINFORCEMENT FOR PRECAST BRIDGE UNITS - THE OUTSIDE AND INSIDE CIRCUMFERENTIAL REINFORCING STEEL FOR THE CORNERS OF THE BRIDGE SHALL BE BENT TO SUCH AN ANGLE THAT IS APPROXIMATELY EQUAL TO THE CONFIGURATION OF THE BRIDGE'S OUTSIDE CORNER.
     - 4.2.3. PLACEMENT OF REINFORCEMENT FOR PRECAST WINGWALLS AND HEADWALLS - THE COVER OF CONCRETE OVER THE LONGITUDINAL AND TRANSVERSE REINFORCEMENT SHALL BE 2" MINIMUM. THE CLEAR DISTANCE FROM THE END OF EACH PRECAST ELEMENT TO THE END OF REINFORCING STEEL SHALL NOT BE LESS THAN 1½" NOR MORE THAN 3". REINFORCEMENT SHALL BE ASSEMBLED UTILIZING A SINGLE LAYER OF WELDED WIRE FABRIC, OR A SINGLE LAYER OF DEFORMED BILLET-STEEL BARS. WELDED WIRE FABRIC SHALL BE COMPOSED OF TRANSVERSE AND LONGITUDINAL WIRES MEETING THE SPACING REQUIREMENTS OF 4.3, BELOW, AND SHALL CONTAIN SUFFICIENT LONGITUDINAL WIRES EXTENDING THROUGH THE ELEMENT TO MAINTAIN THE SHAPE AND POSITION OF THE REINFORCEMENT. LONGITUDINAL REINFORCEMENT MAY BE WELDED WIRE FABRIC OR DEFORMED BILLET-STEEL BARS AND SHALL MEET THE SPACING REQUIREMENTS OF 4.3, BELOW.
     - 4.2.4. PLACEMENT OF REINFORCMENT FOR PRECAST FOUNDATION UNITS - THE COVER OF CONCRETE OVER THE BOTTOM REINFORCEMENT SHALL BE 3 INCHES MINIMUM. THE COVER OF CONCRETE FOR ALL OTHER REINFORCEMENT SHALL BE 2 INCHES MINIMUM. THE CLEAR DISTANCE FROM THE END OF EACH PRECAST ELEMENT TO THE END OF REINFORCING STEEL SHALL NOT BE LESS THAN 2 INCHES NOR MORE THAN 3 INCHES. REINFORCEMENT SHALL BE ASSEMBLED UTILIZING A SINGLE LAYER OF WELDED WIRE FABRIC OR A SINGLE LAYER OF DEFOREMED BILLET-STEEL BARS. WELDED WIRE FABRIC SHALL BE COMPOSED OF TRANSVERSE AND LONGITUDINAL WIRES MEETING THE SPACING REQUIREMENTS OF 4.3, BELOW, AND SHALL CONTAIN SUFFICIENT LONGITUDINAL WIRES EXTENDING THROUGH THE ELEMENT TO MAINTAIN THE SHAPE AND POSITION OF THE REINFORCEMENT. LONGITUDINAL REINFORCEMENT MAY BE WELDED WIRE FABRIC OR DEFORMED BILLET-STEEL BARS AND SHALL MEET THE SPACING REQUIREMENTS OF 4.3, BELOW.
   - 4.3. LAPS, WELDS, SPACING
     - 4.3.1. LAPS, WELDS, AND SPACING FOR PRECAST BRIDGE UNITS - TENSION SPLICES IN THE CIRCUMFERENTIAL REINFORCEMENT SHALL BE MADE BY LAPPING. LAPS MAY BE TACK WELDED TOGETHER FOR ASSEMBLY PURPOSES. FOR SMOOTH WELDED WIRE FABRIC, THE OVERLAP SHALL MEET THE REQUIREMENTS OF AASHTO 5.11.2.5.2 AND 5.11.6.2. FOR DEFORMED WELDED WIRE FABRIC, THE OVERLAP SHALL MEET THE REQUIREMENTS OF AASHTO 5.11.2.5.1 AND 5.11.6.1. THE OVERLAP OF WELDED WIRE FABRIC SHALL BE MEASURED BETWEEN THE OUTER-MOST LONGITUDINAL WIRES OF EACH FABRIC SHEET. FOR DEFORMED BILLET-STEEL BARS, THE OVERLAP SHALL MEET THE REQUIREMENTS OF AASHTO 5.11.2.1 FOR SPLICES OTHER THAN TENSION SPLICES, THE OVERLAP SHALL BE A MINIMUM OF 1'-0" FOR WELDED WIRE FABRIC OR DEFORMED BILLET-STEEL BARS. THE SPACING CENTER TO CENTER OF THE CIRCUMFERENTIAL WIRES IN A WIRE FABRIC SHEET SHALL BE NOT LESS THAN 2" NOR MORE THAN 4". THE SPACING CENTER TO CENTER OF THE LONGITUDINAL WIRES SHALL NOT BE MORE THAN 8". THE SPACING CENTER TO CENTER OF THE LONGITUDINAL DISTRIBUTION STEEL FOR EITHER LINE OF REINFORCING IN THE TOP SLAB SHALL BE NOT MORE THAN 1'-4".
     - 4.3.2. LAPS, WELDS, AND SPACING FOR PRECAST WINGWALLS, HEADWALLS AND FOUNDATIONS - SPLICES IN THE REINFORCEMENT SHALL BE MADE BY LAPPING. LAPS MAY BE TACK WELDED TOGETHER FOR ASSEMBLY PURPOSES. FOR SMOOTH WELDED WIRE FABRIC, THE OVERLAP SHALL MEET THE REQUIREMENTS OF AASHTO 5.11.2.5.2 AND 5.11.6.2. FOR DEFORMED WELDED WIRE FABRIC, THE OVERLAP SHALL MEET THE REQUIREMENTS OF AASHTO 5.11.2.5.1 AND 5.11.6.1. FOR DEFORMED BILLET-STEEL BARS, THE OVERLAP SHALL MEET THE REQUIREMENTS OF AASHTO 5.11.2.1. THE SPACING CENTER-TO-CENTER OF THE WIRES IN A WIRE FABRIC SHEET SHALL BE NOT LESS THAN 2" NOR MORE THAN 8".
   - 4.4. CURING - THE PRECAST CONCRETE ELEMENTS SHALL BE CURED FOR A SUFFICIENT LENGTH OF TIME SO THAT THE CONCRETE WILL DEVELOP THE SPECIFIED COMPRESSIVE STRENGTH IN 28 DAYS OR LESS. ANY ONE OF THE FOLLOWING METHODS OF CURING OR COMBINATIONS THERE OF SHALL BE USED:
     - 4.4.1. STEAM CURING - THE PRECAST ELEMENTS MAY BE LOW-PRESSURE STEAM CURED BY A SYSTEM THAT WILL MAINTAIN A MOIST ATMOSPHERE.
     - 4.4.2. WATER CURING - THE PRECAST ELEMENTS MAY BE WATER CURED BY ANY METHOD THAT WILL KEEP THE SECTIONS MOIST.
     - 4.4.3. MEMBRANE CURING - A SEALING MEMBRANE CONFORMING TO THE REQUIREMENTS OF ASTM SPECIFICATION C309 MAY BE APPLIED AND SHALL BE LEFT INTACT UNTIL THE REQUIRED CONCRETE COMPRESSIVE STRENGTH IS ATTAINED. THE CONCRETE TEMPERATURE AT THE TIME OF APPLICATION SHALL BE WITHIN +/- 10 DEGREES F OF THE ATMOSPHERIC TEMPERATURE. ALL SURFACES SHALL BE KEPT MOIST PRIOR TO THE APPLICATION OF THE COMPOUNDS AND SHALL BE DAMP WHEN THE COMPOUND IS APPLIED.
   - 4.5. STORAGE, HANDLING & DELIVERY
     - 4.5.1. STORAGE - PRECAST CONCRETE BRIDGE ELEMENTS SHALL BE LIFTED AND STORED IN “AS-CAST” POSITION. PRECAST CONCRETE HEADWALL AND KEYSTONE WALL UNITS ARE CAST, STORED AND SHIPPED IN A FLAT POSITION. THE PRECAST ELEMENTS SHALL BE STORED IN SUCH A MANNER TO PREVENT CRACKING OR DAMAGE. STORE ELEMENTS USING TIMBER SUPPORTS AS APPROPRIATE. THE UNITS SHALL NOT BE MOVED UNTIL THE CONCRETE COMPRESSIVE STRENGTH HAS REACHED A MINIMUM OF 2500 PSI, AND THEY SHALL NOT BE STORED IN AN UPRIGHT POSITION.
     - 4.5.2. HANDLING - HANDLING DEVICES SHALL BE PERMITTED IN EACH PRECAST ELEMENT FOR THE PURPOSE OF HANDLING AND SETTING. SPREADER BEAMS MAY BE REQUIRED FOR THE LIFTING OF PRECAST CONCRETE BRIDGE ELEMENTS TO PRECLUDE DAMAGE FROM BENDING OR TORSION FORCES.
     - 4.5.3. DELIVERY - PRECAST CONCRETE ELEMENTS MUST NOT BE SHIPPED UNTIL THE CONCRETE HAS ATTAINED THE SPECIFIED DESIGN COMPRESSIVE STRENGTH, OR AS DIRECTED BY THE DESIGN ENGINEER. PRECAST CONCRETE ELEMENTS MAY BE UNLOADED AND PLACED ON THE GROUND AT THE SITE UNTIL INSTALLED. STORE ELEMENTS USING TIMBER SUPPORTS AS APPROPRIATE.
   - 4.6. QUALITY ASSURANCE - THE PRECASTER SHALL DEMONSTRATE ADHERENCE TO THE STANDARDS SET FORTH IN THE NPCA QUALITY CONTROL MANUAL. THE PRECASTER SHALL MEET EITHER SECTION 4.6.1 OR 4.6.2
     - 4.6.1. CERTIFICATION - THE PRECASTER SHALL BE CERTIFIED BY THE PRECAST/PRESTRESSED CONCRETE INSTITUTE PLANT CERTIFICATION PROGRAM OR THE NATIONAL PRECAST CONCRETE ASSOCIATION'S PLANT CERTIFICATION PROGRAM PRIOR TO AND DURING PRODUCTION OF THE PRODUCTS COVERED BY THIS SPECIFICATION.
     - 4.6.2. QUALIFICATIONS, TESTING AND INSPECTION
       - 4.6.2.1. THE PRECASTER SHALL HAVE BEEN IN THE BUSINESS OF PRODUCING PRECAST CONCRETE PRODUCTS SIMILAR TO THOSE SPECIFIED FOR A MINIMUM OF THREE YEARS. HE SHALL MAINTAIN A PERMANENT QUALITY CONTROL DEPARTMENT OR RETAIN AN INDEPENDENT TESTING AGENCY ON A CONTINUING BASIS. THE AGENCY SHALL ISSUE A REPORT, CERTIFIED BY A LICENSED ENGINEER, DETAILING THE ABILITY OF THE PRECASTER TO PRODUCE QUALITY PRODUCTS CONSISTENT WITH INDUSTRY STANDARDS.
       - 4.6.2.2. THE PRECASTER SHALL SHOW THAT THE FOLLOWING TESTS ARE PERFORMED IN ACCORDANCE WITH THE ASTM STANDARDS INDICATED. TESTS SHALL BE PERFORMED AS INDICATED IN SECTION 6 OF THESE SPECIFICATIONS.
         - 4.6.2.2.1. AIR CONTENT: C231 OR C173
         - 4.6.2.2.2. COMPRESSIVE STRENGTH: C31,C39,C497
       - 4.6.2.3. THE PRECASTER SHALL PROVIDE DOCUMENTATION DEMONSTRATING COMPLIANCE WITH THIS SECTION TO CONTECH® ENGINEERED SOLUTIONS AT REGULAR INTERVALS OR UPON REQUEST.
       - 4.6.2.4. THE OWNER MAY PLACE AN INSPECTOR IN THE PLANT WHEN THE PRODUCTS COVERED BY THIS SPECIFICATION ARE BEING MANUFACTURED.
     - 4.6.3. DOCUMENTATION - THE PRECASTER SHALL SUBMIT PRECAST PRODUCTION REPORTS TO CONTECH® ENGINEERED SOLUTIONS AS REQUIRED.

5. PERMISSIBLE VARIATIONS
   - 5.1. BRIDGE UNITS
     - 5.1.1. INTERNAL DIMENSIONS - THE INTERNAL DIMENSION SHALL VARY NOT MORE THAN 1% FROM THE DESIGN DIMENSIONS NOR MORE THAN 1½" WHICHEVER IS LESS.
     - 5.1.2. SLAB AND WALL THICKNESS - THE SLAB AND WALL THICKNESS SHALL NOT BE LESS THAN THAT SHOWN IN THE DESIGN BY MORE THAN ¼". A THICKNESS MORE THAN THAT REQUIRED IN THE DESIGN SHALL NOT BE CAUSE FOR REJECTION.
     - 5.1.3. LENGTH OF OPPOSITE SURFACES - VARIATIONS IN LAYING LENGTHS OF TWO OPPOSITE SURFACES OF THE BRIDGE UNIT SHALL NOT BE MORE THAN ½" IN ANY SECTION, EXCEPT WHERE BEVELED ENDS FOR LAYING OF CURVES ARE SPECIFIED BY THE PURCHASER.
     - 5.1.4. LENGTH OF SECTION - THE UNDERRUN IN LENGTH OF A SECTION SHALL NOT BE MORE THAN ½" IN ANY BRIDGE UNIT.
     - 5.1.5. POSITION OF REINFORCEMENT - THE MAXIMUM VARIATION IN POSITION OF THE REINFORCEMENT SHALL BE ±½". IN NO CASE SHALL THE COVER OVER THE REINFORCEMENT BE LESS THAN 1½" FOR THE OUTSIDE CIRCUMFERENTIAL STEEL OR BE LESS THAN 1" FOR THE INSIDE CIRCUMFERENTIAL STEEL AS MEASURED TO THE EXTERNAL OR INTERNAL SURFACE OF THE BRIDGE. THESE TOLERANCES OR COVER REQUIREMENTS DO NOT APPLY TO MATING SURFACES OF THE JOINTS.
     - 5.1.6. AREA OF REINFORCEMENT - THE AREAS OF STEEL REINFORCEMENT SHALL BE THE DESIGN STEEL AREAS AS SHOWN IN THE MANUFACTURER'S SHOP DRAWINGS. STEEL AREAS GREATER THAN THOSE REQUIRED SHALL NOT BE CAUSE FOR REJECTION. THE PERMISSIBLE VARIATION IN DIAMETER OF ANY REINFORCEMENT SHALL CONFORM TO THE TOLERANCES PRESCRIBED IN THE ASTM SPECIFICATION FOR THAT TYPE OF REINFORCEMENT.
   - 5.2. WINGWALLS & HEADWALLS
     - 5.2.1. WALL THICKNESS - THE WALL THICKNESS SHALL NOT VARY FROM THAT SHOWN IN THE DESIGN BY MORE THAN ½".
     - 5.2.2. LENGTH/HEIGHT OF WALL SECTIONS - THE LENGTH AND HEIGHT OF THE WALL SHALL NOT VARY FROM THAT SHOWN IN THE DESIGN BY MORE THAN ½".
     - 5.2.3. POSITION OF REINFORCEMENT - THE MAXIMUM VARIATION IN THE POSITION OF THE REINFORCEMENT SHALL BE ±½". IN NO CASE SHALL THE COVER OVER THE REINFORCEMENT BE LESS THAN 1½".
     - 5.2.4. SIZE OF REINFORCEMENT - THE PERMISSIBLE VARIATION IN DIAMETER OF ANY REINFORCING SHALL CONFORM TO THE TOLERANCES PRESCRIBED IN THE ASTM SPECIFICATION FOR THAT TYPE OF REINFORCING. STEEL AREA GREATER THAN THAT REQUIRED SHALL NOT BE CAUSE FOR REJECTION.
   - 5.3. FOUNDATION UNITS
     - 5.3.1. WALL THICKNESS - THE WALL THICKNESS SHALL NOT VARY FROM THAT SHOWN IN THE DESIGN BY MORE THAN ½".
     - 5.3.2. LENGTH/ HEIGHT/WIDTH OF FOUNDATION SECTIONS - THE LENGTH, HEIGHT AND WIDTH OF THE FOUNDATION UNITS SHALL NOT VARY FROM THAT SHOWN IN THE DESIGN BY MORE THAN ½".
     - 5.3.3. POSITION OF REINFORCEMENT - THE MAXIMUM VARIATION IN THE POSITION OF THE REINFORCEMENT SHALL BE ±½". IN NO CASE SHALL THE COVER OVER THE REINFORCEMENT BE LESS THAN 1½".
     - 5.3.4. SIZE OF REINFORCEMENT - THE PERMISSIBLE VARIATION IN DIAMETER OF ANY REINFORCING SHALL CONFORM TO THE TOLERANCES PRESCRIBED IN THE ASTM SPECIFICATION FOR THAT TYPE OF REINFORCING. STEEL AREA GREATER THAN THAT REQUIRED SHALL NOT BE CAUSE FOR REJECTION.

6. TESTING/ INSPECTION
   - 6.1. TESTING
     - 6.1.1. TYPE OF TEST SPECIMEN - CONCRETE COMPRESSIVE STRENGTH SHALL BE DETERMINED FROM COMPRESSION TESTS MADE ON CYLINDERS OR CORES. FOR CYLINDER TESTING, A MINIMUM OF 4 CYLINDERS SHALL BE TAKEN FOR EACH BRIDGE ELEMENT. EACH ELEMENT SHALL BE CONSIDERED SEPARATELY FOR THE PURPOSE OF TESTING AND ACCEPTANCE.
     - 6.1.2. COMPRESSION TESTING - CYLINDERS SHALL BE MADE AND TESTED AS PRESCRIBED BY THE ASTM C39 SPECIFICATION. CYLINDERS SHALL BE CURED IN THE SAME ENVIRONMENT AS THE BRIDGE ELEMENTS. CORES SHALL BE OBTAINED AND TESTED FOR COMPRESSIVE STRENGTH IN ACCORDANCE WITH THE PROVISIONS OF THE ASTM C42 SPECIFICATION.
     - 6.1.3. ACCEPTABILITY OF CYLINDER TESTS - WHEN THE AVERAGE COMPRESSIVE STRENGTH OF ALL CYLINDERS TESTED IS EQUAL TO OR GREATER THAN THE DESIGN COMPRESSIVE STRENGTH, AND NOT MORE THAN 10% OF THE CYLINDERS TESTED HAVE A COMPRESSIVE STRENGTH LESS THAN THE DESIGN CONCRETE STRENGTH, AND NO CYLINDER TESTED HAS A COMPRESSIVE STRENGTH LESS THAN 80% OF THE DESIGN COMPRESSIVE STRENGTH, THEN THE ELEMENT SHALL BE ACCEPTED. WHEN THE COMPRESSIVE STRENGTH OF THE CYLINDERS TESTED DOES NOT CONFORM TO THESE ACCEPTANCE CRITERIA, THE ACCEPTABILITY OF THE ELEMENT MAY BE DETERMINED AS DESCRIBED IN SECTION 6.1.4, BELOW.
     - 6.1.4. ACCEPTABILITY OF CORE TESTS - THE COMPRESSIVE STRENGTH OF THE CONCRETE IN A BRIDGE ELEMENT IS ACCEPTABLE WHEN THE AVERAGE CORE TEST STRENGTH IS EQUAL TO OR GREATER THAN THE DESIGN CONCRETE STRENGTH. WHEN THE COMPRESSIVE STRENGTH OF A CORE TESTED IS LESS THAN THE DESIGN CONCRETE STRENGTH, THE PRECAST ELEMENT FROM WHICH THAT CORE WAS TAKEN MAY BE RE-CORED. WHEN THE COMPRESSIVE STRENGTH OF THE RE-CORE IS EQUAL TO OR GREATER THAN THE DESIGN CONCRETE STRENGTH, THE COMPRESSIVE STRENGTH OF THE CONCRETE IN THAT BRIDGE ELEMENT IS ACCEPTABLE.
       - 6.1.4.1. WHEN THE COMPRESSIVE STRENGTH OF ANY RECORE IS LESS THAN THE DESIGN CONCRETE STRENGTH, THE PRECAST ELEMENT FROM WHICH THAT CORE WAS TAKEN SHALL BE REJECTED.
       - 6.1.4.2. PLUGGING CORE HOLES - THE CORE HOLES SHALL BE PLUGGED AND SEALED BY THE MANUFACTURER IN A MANNER SUCH THAT THE ELEMENTS WILL MEET ALL OF THE TEST REQUIREMENTS OF THIS SPECIFICATION. PRECAST ELEMENTS SO SEALED SHALL BE CONSIDERED SATISFACTORY FOR USE.
       - 6.1.4.3. TEST EQUIPMENT - EVERY MANUFACTURER FURNISHING PRECAST ELEMENTS UNDER THIS SPECIFICATION SHALL FURNISH ALL FACILITIES AND PERSONNEL NECESSARY TO CARRY OUT THE TEST REQUIRED.
   - 6.2. INSPECTION - THE QUALITY OF MATERIALS, THE PROCESS OF MANUFACTURE, AND THE FINISHED PRECAST ELEMENTS SHALL BE SUBJECT TO INSPECTION BY THE PURCHASER.

7. JOINTS
   THE BRIDGE UNITS SHALL BE PRODUCED WITH FLAT BUTT ENDS. THE ENDS OF THE BRIDGE UNITS SHALL BE SUCH THAT WHEN THE SECTIONS ARE LAID TOGETHER THEY WILL MAKE A CONTINUOUS LINE WITH A SMOOTH INTERIOR FREE OF APPRECIABLE IRREGULARITIES, ALL COMPATIBLE WITH THE PERMISSIBLE VARIATIONS IN SECTION 5, ABOVE. THE JOINT WIDTH BETWEEN ADJACENT PRECAST UNITS SHALL NOT EXCEED ¾".

8. WORKMANSHIP/ FINISH
   THE BRIDGE UNITS, WINGWALLS, HEADWALLS AND FOUNDATION UNITS SHALL BE SUBSTANTIALLY FREE OF FRACTURES. THE ENDS OF THE BRIDGE UNITS SHALL BE NORMAL TO THE WALLS AND CENTERLINE OF THE BRIDGE SECTION, WITHIN THE LIMITS OF THE VARIATIONS GIVEN IN SECTION 5, ABOVE, EXCEPT WHERE BEVELED ENDS ARE SPECIFIED. THE FACES OF THE WINGWALLS AND HEADWALLS SHALL BE PARALLEL TO EACH OTHER, WITHIN THE LIMITS OF VARIATIONS GIVEN IN SECTION 5, ABOVE. THE SURFACE OF THE PRECAST ELEMENTS SHALL BE A SMOOTH STEEL FORM OR TROWELED SURFACE. TRAPPED AIR POCKETS CAUSING SURFACE DEFECTS SHALL BE CONSIDERED AS PART OF A SMOOTH, STEEL FORM FINISH.

9. REPAIRS
   PRECAST ELEMENTS MAY BE REPAIRED, IF NECESSARY, BECAUSE OF IMPERFECTIONS IN MANUFACTURE OR HANDLING DAMAGE AND WILL BE ACCEPTABLE IF, IN THE OPINION OF THE PURCHASER, THE REPAIRS ARE SOUND, PROPERLY FINISHED AND CURED, AND THE REPAIRED SECTION CONFORMS TO THE REQUIREMENTS OF THIS SPECIFICATION.

10. REJECTION
   THE PRECAST ELEMENTS SHALL BE SUBJECT TO REJECTION ON ACCOUNT OF ANY OF THE SPECIFICATION REQUIREMENTS. INDIVIDUAL PRECAST ELEMENTS MAY BE REJECTED BECAUSE OF ANY OF THE FOLLOWING:
   - 10.1. FRACTURES OR CRACKS PASSING THROUGH THE WALL, EXCEPT FOR A SINGLE END CRACK THAT DOES NOT EXCEED ONE HALF THE THICKNESS OF THE WALL.
   - 10.2. DEFECTS THAT INDICATE PROPORTIONING, MIXING, AND MOLDING NOT IN COMPLIANCE WITH SECTION 4 OF THESE SPECIFICATIONS.
   - 10.3. HONEYCOMBED OR OPEN TEXTURE.
   - 10.4. DAMAGED ENDS, WHERE SUCH DAMAGE WOULD PREVENT MAKING A SATISFACTORY JOINT.

REGISTERED PROFESSIONAL ENGINEER 80570PE OREGON JUNE 02, 2010 DANIEL E. SCHALL 6/5/15
EXP: 6/30/16

100% DESIGN
FINAL DESIGN
ISSUE FOR BID & CONSTRUCTION

Plotted by:MCCARTHY, PATRICK on Friday, June 05, 2015 at 7:01:53 AM from the C-20 layout tab
File Name/Path:K:\12000\12700\12790\127901\DWG_100%_DESIGN\C12-C20 - DETAILS_100%.DWG

willamalane Park and Recreation District
SCHIRMER SATRE GROUP LANDSCAPE ARCHITECTS

Revisions and Addendums			
Description	Date	No.	By
60% DESIGN	4/7/14	1	DS
REVISED 60% DESIGN	9/12/14	2	DS
90% DESIGN	12/12/14	3	DS
DRAFT 100% DESIGN	5/15/15	4	DS
FINAL 100% DESIGN	6/5/15	5	DS

amec foster wheeler

SPRINGFIELD OREGON
THE CITY OF SPRINGFIELD
DEVELOPMENT & PUBLIC WORKS
225 FIFTH STREET
SPRINGFIELD, OREGON 97477
VOICE: 541-726-3753
FAX: 541-726-3689
WWW.SPRINGFIELD-OR.GOV

DESIGN: DS | DRAWN: PM | CHECK: HM | PROJ. NO: P21052 | BID ON: 6/10/15

SPRINGFIELD MILL RACE STORMWATER FACILITY,
BOOTH KELLY TRAILHEAD & MILL RACE PATH
MILL RACE PATH & BRIDGE DETAILS III

SHEET C-20
21 OF 47

11. MARKING
EACH BRIDGE UNIT SHALL BE CLEARLY MARKED BY WATERPROOF PAINT. THE FOLLOWING SHALL BE SHOWN ON THE INSIDE OF THE VERTICAL LEG OF THE BRIDGE SECTION:
BRIDGE SPAN x BRIDGE RISE
DATE OF MANUFACTURE
NAME OR TRADEMARK OF THE MANUFACTURER

12. INSTALLATION PREPARATION
TO ENSURE CORRECT INSTALLATION OF THE PRECAST CONCRETE BRIDGE SYSTEM, CARE AND CAUTION MUST BE EXERCISED IN FORMING THE SUPPORT AREAS FOR BRIDGE UNITS, HEADWALL, AND KEYSTONE WALL ELEMENTS. EXERCISING SPECIAL CARE WILL FACILITATE THE RAPID INSTALLATION OF THE PRECAST COMPONENTS.

12.1. FOOTINGS
DO NOT OVER EXCAVATE FOUNDATIONS UNLESS DIRECTED BY SITE SOIL ENGINEER TO REMOVE UNSUITABLE SOIL.

THE SITE SOILS ENGINEER SHALL CERTIFY THAT THE BEARING CAPACITY MEETS OR EXCEEDS THE FOOTING DESIGN REQUIREMENTS, PRIOR TO THE CONTRACTOR POURING OF THE FOOTINGS.

THE BRIDGE UNITS AND WINGWALLS SHALL BE INSTALLED ON EITHER PRECAST OR CAST-IN-PLACE CONCRETE FOOTINGS. THE SIZE AND ELEVATION OF THE FOOTINGS SHALL BE AS DESIGNED BY THE ENGINEER. A KEYWAY SHALL BE FORMED IN THE TOP SURFACE OF THE BRIDGE FOOTING AS SPECIFIED ON THE PLANS. NO KEYWAY IS REQUIRED IN THE KEYSTONE WALL FOOTINGS, UNLESS OTHERWISE SPECIFIED ON THE PLANS.

THE FOOTINGS SHALL BE GIVEN A SMOOTH FLOAT FINISH AND SHALL REACH A COMPRESSIVE STRENGTH OF 2,000 PSI BEFORE PLACEMENT OF THE BRIDGE AND KEYSTONE WALL ELEMENTS. BACKFILLING SHALL NOT BEGIN UNTIL THE FOOTING HAS REACHED THE FULL DESIGN COMPRESSIVE STRENGTH.

THE FOOTING SURFACE SHALL BE CONSTRUCTED IN ACCORDANCE WITH GRADES SHOWN ON THE PLANS. WHEN TESTED WITH A 10'-0" STRAIGHT EDGE, THE SURFACE SHALL NOT VARY MORE THAN 1/4" IN 10'-0".

IF A PRECAST CONCRETE FOOTING IS USED, THE CONTRACTOR SHALL PREPARE A 4" THICK BASE LAYER OF COMPACTED GRANULAR MATERIAL THE FULL WIDTH OF THE FOOTING PRIOR TO PLACING THE PRECAST FOOTING.

THE FOUNDATIONS FOR PRECAST CONCRETE BRIDGE ELEMENTS AND WINGWALLS MUST BE CONNECTED BY REINFORCEMENT TO FORM ONE MONOLITHIC BODY. EXPANSION JOINTS SHALL NOT BE USED.

THE CONTRACTOR SHALL BE RESPONSIBLE FOR THE CONSTRUCTION OF THE FOUNDATIONS PER THE PLANS AND SPECIFICATIONS.

13. INSTALLATION

13.1. GENERAL - THE INSTALLATION OF THE PRECAST CONCRETE ELEMENTS SHALL BE AS EXPLAINED IN THE PUBLICATION CON/SPAN BRIDGE SYSTEMS INSTALLATION HANDBOOK.

13.1.1. LIFTING - IT IS THE RESPONSIBILITY OF THE CONTRACTOR TO ENSURE THAT A CRANE OF THE CORRECT LIFTING CAPACITY IS AVAILABLE TO HANDLE THE PRECAST CONCRETE UNITS. THIS CAN BE ACCOMPLISHED BY USING THE WEIGHTS GIVEN FOR THE PRECAST CONCRETE COMPONENTS AND BY DETERMINING THE LIFTING REACH FOR EACH CRANE UNIT. SITE CONDITIONS MUST BE CHECKED WELL IN ADVANCE OF SHIPPING TO ENSURE PROPER CRANE LOCATION AND TO AVOID ANY LIFTING RESTRICTIONS. THE LIFT ANCHORS OR HOLES PROVIDED IN EACH UNIT ARE THE ONLY MEANS TO BE USED TO LIFT THE ELEMENTS. THE PRECAST CONCRETE ELEMENTS MUST NOT BE SUPPORTED OR RAISED BY OTHER MEANS THAN THOSE GIVEN IN THE MANUALS AND DRAWINGS WITHOUT WRITTEN APPROVAL FROM CONTECH® ENGINEERED SOLUTIONS.

13.1.2. CONSTRUCTION EQUIPMENT WEIGHT RESTRICTIONS - IN NO CASE SHALL EQUIPMENT OPERATING IN EXCESS OF THE DESIGN LOAD (HS20 OR HS25) BE PERMITTED OVER THE BRIDGE UNITS UNLESS APPROVED BY CONTECH® ENGINEERED SOLUTIONS.

13.1.2.1. IN THE IMMEDIATE AREA OF THE BRIDGE UNITS, THE FOLLOWING RESTRICTIONS FOR THE USE OF HEAVY CONSTRUCTION MACHINERY DURING BACKFILLING OPERATIONS APPLY:

- NO CONSTRUCTION EQUIPMENT SHALL CROSS THE BARE PRECAST CONCRETE BRIDGE UNIT.
- AFTER THE COMPACTED FILL LEVEL HAS REACHED A MINIMUM OF 4" OVER THE CROWN OF THE BRIDGE, CONSTRUCTION EQUIPMENT WITH A WEIGHT OF LESS THAN 10 TONS MAY CROSS THE BRIDGE.
- AFTER THE COMPACTED FILL LEVEL HAS REACHED A MINIMUM OF 1'-0" OVER THE CROWN OF THE BRIDGE, CONSTRUCTION EQUIPMENT WITH A WEIGHT OF LESS THAN 30 TONS MAY CROSS THE BRIDGE.
- AFTER THE COMPACTED FILL LEVEL HAS REACHED THE DESIGN COVER, OR 2'-0" MINIMUM, OVER THE CROWN OF THE PRECAST CONCRETE BRIDGE, CONSTRUCTION EQUIPMENT WITHIN THE DESIGN LOAD LIMITS FOR THE ROAD MAY CROSS THE PRECAST CONCRETE BRIDGE.

13.2. LEVELING PAD/SHIMS - THE BRIDGE UNITS AND WINGWALLS SHALL BE SET ON HARDBOARD SHIMS CONFORMING TO ASTM D1037 OR PLASTIC SHIMS (DAYTON SUPERIOR P-80, P-81 OR APPROVED EQUAL) MEASURING 5" x 5", MINIMUM, UNLESS SHOWN OTHERWISE ON THE PLANS. A MINIMUM GAP OF 1/2" SHALL BE PROVIDED BETWEEN THE FOOTING AND THE BOTTOM OF THE BRIDGE'S VERTICAL LEGS OR THE BOTTOM OF THE KEYSTONE WALL. ALSO, A SUPPLY OF 1/4", 1/2" AND 1/8" THICK HARDBOARD OR PLASTIC SHIMS FOR VARIOUS SHIMMING PURPOSES SHALL BE ON SITE.

13.3. PLACEMENT OF BRIDGE UNITS - THE BRIDGE UNITS SHALL BE PLACED AS SHOWN ON THE ENGINEER'S PLAN DRAWINGS. SPECIAL CARE SHALL BE TAKEN IN SETTING THE ELEMENTS TO THE TRUE LINE AND GRADE. THE JOINT WIDTH BETWEEN ADJACENT PRECAST UNITS SHALL NOT EXCEED 3/4".

13.4. IT IS THE CONTRACTOR'S RESPONSIBILITY TO MAINTAIN THE STRUCTURE SPAN DURING ALL PHASES OF INSTALLATION. DUE TO THE ARCH SHAPE, BRIDGE ELEMENTS WILL TEND TO SPREAD UNDER SELF-WEIGHT. IT IS IMPERATIVE THAT ANY LATERAL SPREADING OF THE BRIDGE ELEMENTS BE AVOIDED DURING AND AFTER THEIR PLACEMENT. GENERALLY, HORIZONTAL CABLE TIES OR TIE RODS ARE SHIPPED IN THE LARGER BRIDGE ELEMENTS TO ASSIST IN PREVENTING THIS SPREADING. CABLE TIES/TIE RODS SHALL NOT BE REMOVED UNTILL BRIDGE UNITS ARE GROUTED AND GROUT HAS CURED. IT IS RECOMMENDED THAT TEMPORARY HARDWOOD BLOCKS BE USED IN CONJUNCTION WITH THE CABLE TIES/TIE RODS TO MAINTAIN SPAN. IF, HOWEVER, DUE TO SITE RESTRICTIONS, THESE CABLE TIES/TIE RODS MUST BE REMOVED PRIOR TO PLACEMENT OF THE BRIDGE ELEMANTS, THE CONTRACTOR MUST NOTIFY CONTECH (MANUFACTURER) AND REQUEST A SUGGESTED INSTALLATION PROCEDURE.

IN ADDITION, IF THE CABLE TIES/TIE RODS MUST BE REMOVED PRIOR TO SETTING ARCH UNITS, THE FOLLOWING QUALITY CONTROL PROCEDURE MUST BE FOLLOWED:
1) FIND "MEASURED SPAN" UPON ARCH UNIT'S DELIVERY TO SITE, PRIOR TO LIFTING FROM TRUCK AND REMOVING CABLE TIES/TIE RODS. "MEASURED SPAN" SHALL BE THE AVERAGE OF (3) SPAN MEASUREMENTS ALONG THE LAY LENGTH OF THE ARCH UNIT.
2) AFTER SETTING OF BRIDGE UNIT ON THE FOUNDATION, VERIFY THE SPAN. THIS "INSTALLED SPAN MEASUREMENT" SHALL NOT EXCEED THE MAXIMUM OF:
A) THE NOMINAL SPAN +1/2" OR
B) THE "MEASURED SPAN"
IF THE "INSTALLED SPAN MEASUREMENT" EXCEEDS THIS AMOUNT, THE ARCH UNIT SHALL BE LIFTED AND RE-SET UNTIL THE "INSTALLED SPAN MEASUREMENT" MEETS THE LIMITS.

13.5. PLACEMENT OF WINGWALLS, HEADWALLS AND FOUNDATION UNITS - THE WINGWALLS, HEADWALLS AND FOUNDATIONS SHALL BE PLACED AS SHOWN ON THE PLAN DRAWINGS. SPECIAL CARE SHALL BE TAKEN IN SETTING THE ELEMENTS TO THE TRUE LINE AND GRADE.

13.6. WATERPROOFING/JOINT PROTECTION AND SUBSURFACE DRAINAGE

13.6.1. EXTERNAL PROTECTION OF JOINTS - THE BUTT JOINT MADE BY TWO ADJOINING BRIDGE UNITS SHALL BE COVERED WITH A 7/8" x 1 3/8" PREFORMED BITUMINOUS JOINT SEALANT AND A MINIMUM OF A 9" WIDE JOINT WRAP. THE SURFACE SHALL BE FREE OF DIRT BEFORE APPLYING THE JOINT MATERIAL. A PRIMER COMPATIBLE WITH THE JOINT WRAP TO BE USED SHALL BE APPLIED FOR A MINIMUM WIDTH OF 9" ON EACH SIDE OF THE JOINT. THE EXTERNAL WRAP SHALL BE CS212 BY CONCRETE SEALANTS INC., EZ-WRAP RUBBER BY PRESS-SEAL GASKET CORPORATION, SEAL WRAP BY MAR MAC MANUFACTURING CO. INC. OR APPROVED EQUAL. THE JOINT SHALL BE COVERED CONTINUOUSLY FROM THE BOTTOM OF ONE BRIDGE SECTION LEG, ACROSS THE TOP OF THE BRIDGE AND TO THE OPPOSITE BRIDGE SECTION LEG. ANY LAPS THAT RESULT IN THE JOINT WRAP SHALL BE A MINIMUM OF 6" LONG WITH THE OVERLAP RUNNING DOWNHILL.

13.6.2. IN ADDITION TO THE JOINTS BETWEEN BRIDGE UNITS, THE JOINT BETWEEN THE END BRIDGE UNIT AND THE HEADWALL SHALL ALSO BE SEALED AS DESCRIBED ABOVE. IF PRECAST WINGWALLS ARE USED, THE JOINT BETWEEN THE END BRIDGE UNIT AND THE KEYSTONE WALL SHALL BE SEALED WITH A 2'-0" STRIP OF FILTER FABRIC. ALSO, IF LIFT HOLES ARE FORMED IN THE BRIDGE UNITS, THEY SHALL BE PRIMED AND COVERED WITH A 9" x 9" SQUARE OF JOINT WRAP.

13.6.3. DURING THE BACKFILLING OPERATION, CARE SHALL BE TAKEN TO KEEP THE JOINT WRAP IN ITS PROPER LOCATION OVER THE JOINT.

13.6.4. SUBSOIL DRAINAGE SHALL BE AS DIRECTED BY THE ENGINEER.

13.7. GROUTING

13.7.1. GROUTING SHALL NOT BE PERFORMED WHEN TEMPERATURES ARE EXPECTED TO GO BELOW 35° FOR A PERIOD OF 72 HOURS. FILL THE BRIDGE-FOUNDATION KEYWAY WITH CEMENT GROUT (PORTLAND CEMENT AND WATER OR CEMENT MORTAR COMPOSED OF PORTLAND CEMENT, SAND AND WATER) WITH A MINIMUM 28-DAY COMPRESSIVE STRENGTH OF 3000 PSI. VIBRATE AS REQUIRED TO ENSURE THAT THE ENTIRE KEY AROUND THE BRIDGE ELEMENT IS COMPLETELY FILLED. IF BRIDGE ELEMENTS HAVE BEEN SET WITH TEMPORARY TIES (CABLES, BARS, ETC.) GROUT MUST ATTAIN A MINIMUM COMPRESSIVE STRENGTH OF 1500 PSI BEFORE TIES MAY BE REMOVED.

13.7.2. ALL GROUT SHALL HAVE A MAXIMUM AGGREGATE SIZE OF ¼".

13.7.3. LIFTING AND ERECTION ANCHOR RECESSES SHALL BE FILLED WITH GROUT.

13.7.4. AFTER GROUT HAS REACHED ITS DESIGN STRENGTH THE TEMPORARY HARDWOOD WEDGES SHALL BE REMOVED AND THEIR HOLES FILLED WITH GROUT.

13.8. BACKFILL

13.8.1. DO NOT PERFORM BACKFILLING DURING WET OR FREEZING WEATHER.

13.8.2. NO BACKFILL SHALL BE PLACED AGAINST ANY STRUCTURAL ELEMENTS UNTIL THEY HAVE BEEN APPROVED BY THE ENGINEER.

13.8.3. BACKFILL SHALL BE CONSIDERED AS ALL REPLACED EXCAVATION AND NEW EMBANKMENT ADJACENT TO THE PRECAST CONCRETE ELEMENTS. THE PROJECT CONSTRUCTION AND MATERIAL SPECIFICATIONS, WHICH INCLUDE THE SPECIFICATIONS FOR EXCAVATION FOR STRUCTURES AND ROADWAY EXCAVATION AND EMBANKMENT CONSTRUCTION, SHALL APPLY EXCEPT AS MODIFIED IN THIS SECTION.

13.8.4. BACKFILL ZONES:
IN-SITU SOIL
ZONE A: CONSTRUCTED EMBANKMENT OR OVERFILL.
ZONE B: FILL THAT IS DIRECTLY ASSOCIATED WITH PRECAST CONCRETE BRIDGE INSTALLATION.
ZONE C: ROAD STRUCTURE.

13.8.5. REQUIRED BACKFILL PROPERTIES

13.8.5.1. IN-SITU SOIL - NATURAL GROUND IS TO BE SUFFICIENTLY STABLE TO ALLOW EFFECTIVE SUPPORT TO THE PRECAST CONCRETE BRIDGE UNITS. AS A GUIDE, THE EXISTING NATURAL GROUND SHOULD BE OF SIMILAR QUALITY AND DENSITY TO ZONE B MATERIAL FOR MINIMUM LATERAL DIMENSION OF ONE BRIDGE SPAN OUTSIDE OF THE BRIDGE FOOTING.

13.8.5.2. ZONE A - ZONE A REQUIRES FILL MATERIAL WITH SPECIFICATIONS AND COMPACTING PROCEDURES EQUAL TO THAT FOR NORMAL ROAD EMBANKMENTS.

13.8.5.3. ZONE B - GENERALLY, SOILS SHALL BE REASONABLY FREE OF ORGANIC MATTER, AND, NEAR CONCRETE SURFACES, FREE OF STONES LARGER THAN 3" IN DIAMETER SEE CHARTS FOR DETAILED DESCRIPTIONS OF ACCEPTABLE SOILS.

13.8.5.4. ZONE C - ZONE C IS THE ROAD SECTION OF GRAVEL, ASPHALT OR CONCRETE BUILT IN COMPLIANCE WITH LOCAL ENGINEERING PRACTICES.

13.8.5.5. GEOTECHNICAL ENGINEER SHALL REVIEW GRADATIONS OF ALL INTERFACING MATERIALS AND, IF NECESSARY, RECOMMEND GEOTEXTILE FILTER FABRIC (PROVIDED BY CONTRACTOR)

13.8.6. PLACING AND COMPACTING BACKFILL
DUMPING FOR BACKFILLING IS NOT ALLOWED ANY NEARER THAN 3'-0" FROM THE BRIDGE LEG.

THE FILL MUST BE PLACED AND COMPACTED IN LAYERS NOT EXCEEDING 8". THE MAXIMUM DIFFERENCE IN THE SURFACE LEVELS OF THE FILL ON OPPOSITE SIDES OF THE BRIDGE MUST NOT EXCEED 2'-0".

THE FILL BEHIND WINGWALLS MUST BE PLACED AT THE SAME TIME AS THAT OF THE BRIDGE FILL. IT MUST BE PLACED IN PROGRESSIVELY PLACED HORIZONTAL LAYERS NOT EXCEEDING 8" PER LAYER.

THE BACKFILL OF ZONE B SHALL BE COMPACTED TO A MINIMUM DENSITY OF 95% OF THE STANDARD PROCTOR, AS REQUIRED BY AASHTO T-99.

SOIL WITHIN 1'-0" OF CONCRETE SURFACES SHALL BE HAND-COMPACTED. ELSEWHERE, USE OF ROLLERS IS ACCEPTABLE. IF VIBRATING ROLLER-COMPACTORS ARE USED, THEY SHALL NOT BE STARTED OR STOPPED WITHIN ZONE B AND THE VIBRATION FREQUENCY SHOULD BE AT LEAST 30 REVOLUTIONS PER SECOND.

THE BACKFILL MATERIAL AND COMPACTING BEHIND WINGWALLS SHALL SATISFY THE CRITERIA FOR THE BRIDGE BACKFILL, ZONE B.

BACKFILL AGAINST A WATERPROOFED SURFACE SHALL BE PLACED CAREFULLY TO AVOID DAMAGE TO THE WATERPROOFING MATERIAL.

13.8.7. BRIDGE UNITS
FOR FILL HEIGHTS OVER 12 FEET (AS MEASURED FROM TOP CROWN OF BRIDGE TO FINISHED GRADE), NO BACKFILLING MAY BEGIN UNTIL A BACKFILL COMPACTION TESTING PLAN HAS BEEN COORDINATED WITH AND APPROVED BY CONTECH® ENGINEERED SOLUTIONS.

13.8.8. WINGWALLS
BACKFILL IN FRONT OF WINGWALLS SHALL BE CARRIED TO GROUND LINES SHOWN IN THE PLANS.

13.8.9. MONITORING
THE CONTRACTOR SHALL CHECK SETTLEMENTS AND HORIZONTAL DISPLACEMENT OF FOUNDATION TO ENSURE THAT THEY ARE WITHIN THE ALLOWABLE LIMIT PROVIDED BY THE ENGINEER. THESE MEASUREMENTS SHOULD GIVE AN INDICATION OF THE SETTLEMENTS AND DEFORMATIONS ALONG THE LENGTH OF THE FOUNDATIONS.

THE FIRST MEASUREMENT SHOULD TAKE PLACE AFTER THE ERECTION OF ALL PRECAST BRIDGE SYSTEM ELEMENTS, A SECOND AFTER COMPLETION OF BACKFILLING, AND A THIRD BEFORE OPENING OF THE BRIDGE TO TRAFFIC. FURTHER MEASUREMENTS MAY BE MADE ACCORDING TO LOCAL CONDITIONS.

ACCEPTABLE SOILS FOR USE IN ZONE B BACKFILL

TYPICAL USCS MATERIALS	AASHTO GROUP	AASHTO SUBGROUP	PERCENT PASSING US SIEVE NO.			CHARACTER OF FRACTION PASSING NO. 40 SIEVE		SOIL DESRIPTION
			#10	#40	#200	LIQUID LIMIT	PLASTICITY INDEX	
GW, GP, SP	A1	A-1a	50 MAX	30 MAX	15 MAX		6 MAX	LARGELY GRAVEL BUT CAN INCLUDE SAND AND FINES
GM, SW, SP, SM	A1	A-1b		50 MAX	25 MAX		6 MAX	GRAVELLY SAND OR GRADED SAND, MAY INCLUDE FINES
GM, SM, ML, SP, GP	A2	A-2-4			35 MAX	40 MAX	10 MAX	SANDS, GRAVELS WITH LOW-PLASTICITY SILT FINES
SC, GC, GM	A2	A-2-5			35 MAX	41 MIN	10 MAX	SANDS, GRAVELS WITH PLASTIC SILT FINES
SP, SM, SW	A3			51 MIN	10 MAX		NON-PLASTIC	FINE SANDS
ML, SM, SC	A4				36 MIN	40 MAX	10 MAX	LOW-COMPRESSIBILTY SILTS

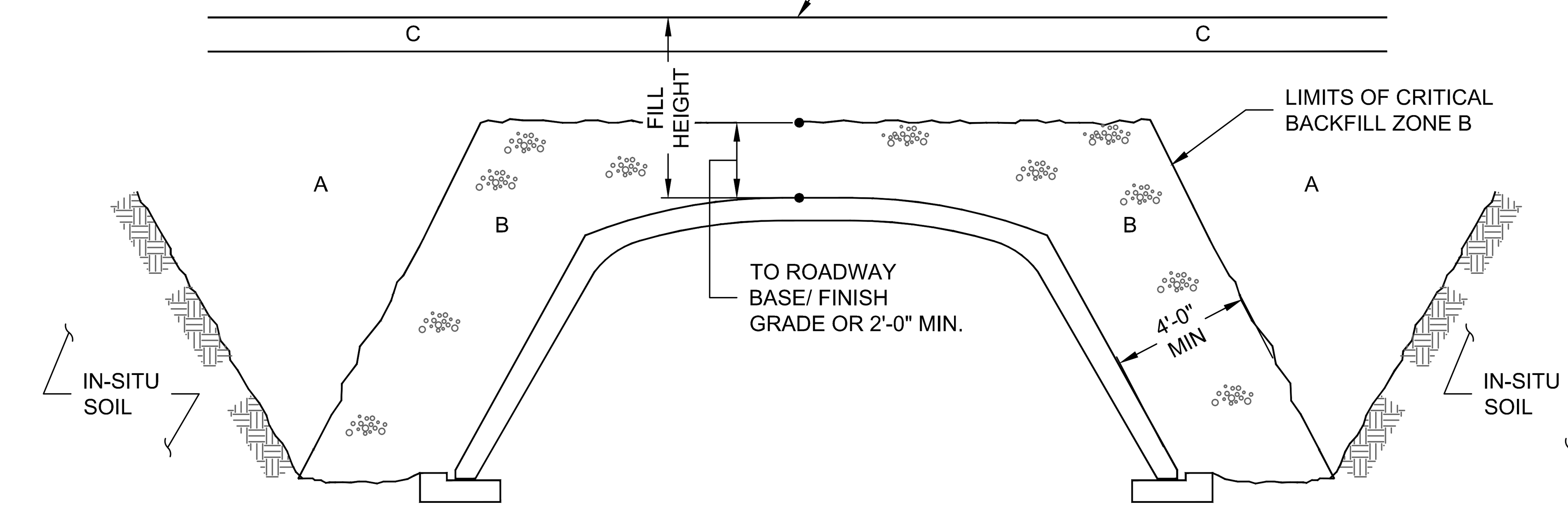

SPAN	FILL HEIGHT	ACCEPTABLE MATERIAL INSIDE ZONE B
≤ 24'-0"	≥ 12'-0"	A1, A3
≤ 24'-0"	< 12'-0"	A1, A2, A3, A4
> 24'-0"	ALL	A1, A3

BACKFILL REQUIREMENTS

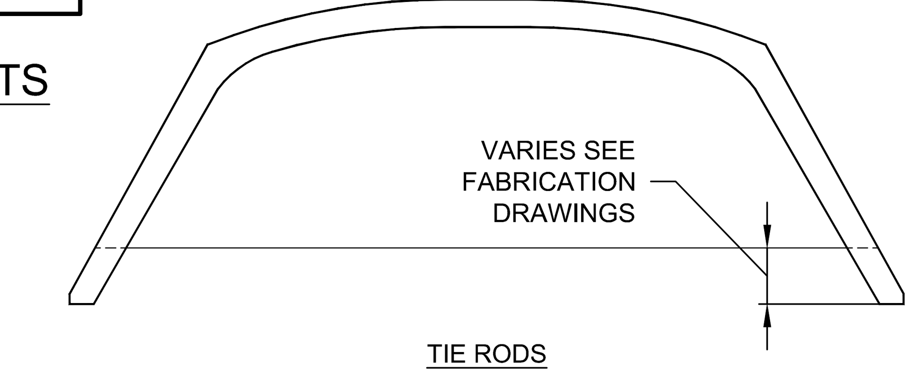

TIE RODS

REGISTERED PROFESSIONAL ENGINEER
80570PE
OREGON
JUNE 02, 2010
DANIEL E. SCHALL
6/5/15
EXP: 6/30/16

100% DESIGN
FINAL DESIGN
ISSUE FOR BID & CONSTRUCTION

Plotted by:MCCARTHY, PATRICK on Friday, June 05, 2015 at 7:02:03 AM from the C-21 layout tab
File Name/Path:K:\12000\12700\12790\127901\DWG_100%_DESIGN\C12-C20 - DETAILS_100%.DWG

willamalane Park and Recreation District
LANDSCAPE ARCHITECTS SCHIRMER SATRE GROUP

Revisions and Addendums			
Description	Date	No.	By
60% DESIGN	4/7/14	1	DS
REVISED 60% DESIGN	9/12/14	2	DS
90% DESIGN	12/12/14	3	DS
DRAFT 100% DESIGN	5/15/15	4	DS
FINAL 100% DESIGN	6/5/15	5	DS

amec foster wheeler

SPRINGFIELD OREGON
THE CITY OF SPRINGFIELD DEVELOPMENT & PUBLIC WORKS
225 FIFTH STREET
SPRINGFIELD, OREGON 97477
VOICE: 541-726-3753
FAX: 541-726-3689
WWW.SPRINGFIELD-OR.GOV

DESIGN: DS | DRAWN: PM | CHECK: HM | PROJ. NO: P21052 | BID ON: 6/10/15

SPRINGFIELD MILL RACE STORMWATER FACILITY, BOOTH KELLY TRAILHEAD & MILL RACE PATH
MILL RACE PATH & BRIDGE DETAILS IV

THIS DRAWING IS FULL SIZE WHEN PLOTTED AT 22"x34".

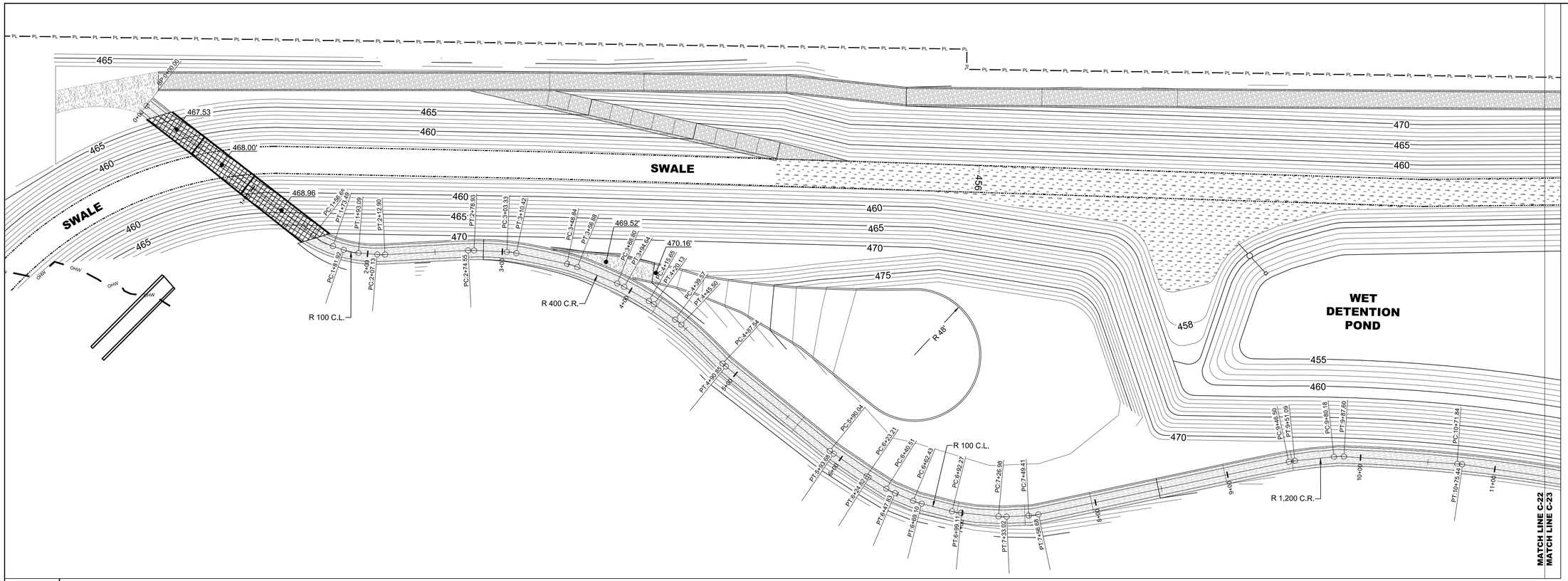

LEGEND

- PROPOSED MAJOR CONTOUR
- PROPOSED MINOR CONTOUR
- PROJECT BOUNDARY
- 20' WIDE SWALE
- ORDINARY HIGH WATER
- MILL RACE PATH
- ACCESS ROAD
- DRIVABLE GRASS PAVER
- CONSPAN BRIDGE
- ASPHALT TRANSITION

R	RADIUS
PT	POINT OF TANGENCY
PC	POINT CURVE
C.L.	CURVE LEFT
C.R.	CURVE RIGHT

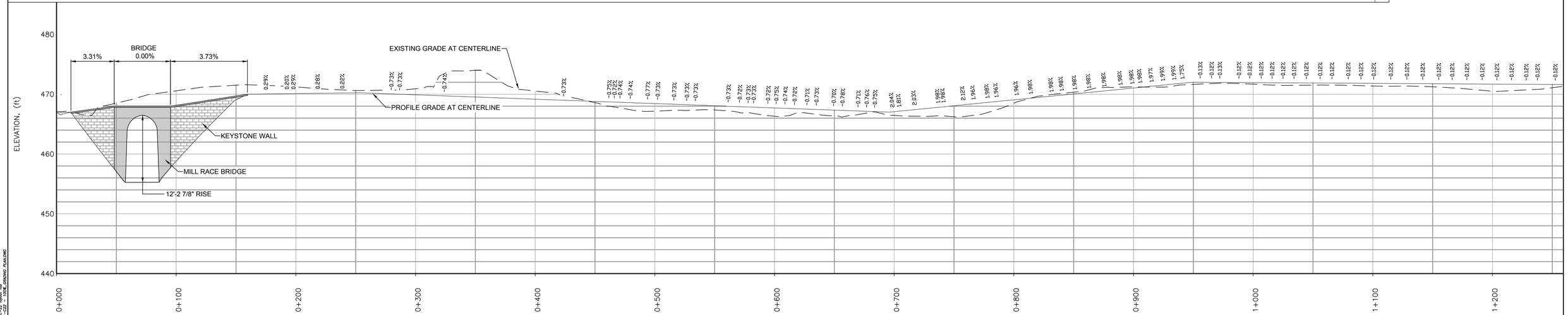

HORIZONTAL SCALE: 1" = 40'
VERTICAL SCALE: 1" = 4'

100% DESIGN
FINAL DESIGN
ISSUE FOR BID & CONSTRUCTION

REGISTERED PROFESSIONAL ENGINEER 80570PE OREGON JUNE 02, 2010 DANIEL E. SCHALL 6/5/15 EXP: 6/30/16

willamalane Park and Recreation District

LANDSCAPE ARCHITECTS SCHIRMER SATRE GROSS INC

Revisions and Addendums			
Description	Date	No.	By
60% DESIGN	4/7/14	1	DS
REVISED 60% DESIGN	9/12/14	2	DS
90% DESIGN	12/12/14	3	DS
DRAFT 100% DEISGN	5/15/15	4	DS
FINAL 100% DESIGN	6/5/15	5	DS

amec foster wheeler

SPRINGFIELD OREGON

THE CITY OF SPRINGFIELD
DEVELOPMENT & PUBLIC WORKS
225 FIFTH STREET
SPRINGFIELD, OREGON 97477
VOICE: 541-726-3753
FAX: 541-726-3689
WWW.SPRINGFIELD-OR.GOV

DESIGN: DS | DRAWN: PM | CHECK: HM | PROJ. NO: P21052 | BID ON: 6/10/15

SPRINGFIELD MILL RACE STORMWATER FACILITY, BOOTH KELLY TRAILHEAD & MILL RACE PATH

MILL RACE PATH PLAN & PROFILE I

SHEET C-22

23 OF 47

THIS DRAWING IS FULL SIZE WHEN PLOTTED AT 22"x34".

Plotted by/CARTHY, PATRICK on Friday, June 05, 2015 at 6:55:02 AM from the C-22 layout tab
File: Home/Patrick/12260/12260/12260/12260/1/dwg/L_108_GRADING/08-511_C21-C23 - 108_GRADING PLAN.DWG

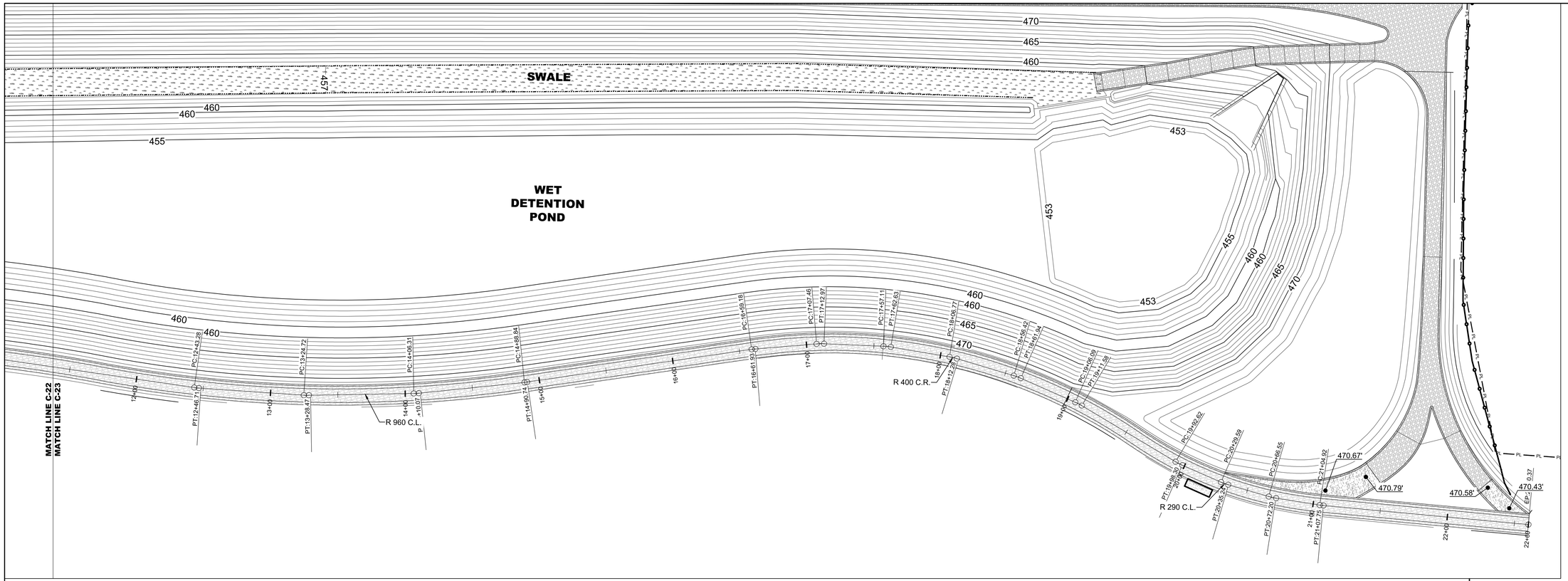

LEGEND

- PROPOSED MAJOR CONTOUR
- PROPOSED MINOR CONTOUR
- PROJECT BOUNDARY
- 20' WIDE SWALE
- MILL RACE PATH
- ACCESS ROAD
- DRIVABLE GRASS PAVER
- ASPHALT TRANSITION

R	RADIUS
PT	POINT OF TANGENCY
PC	POINT CURVE
C.L.	CURVE LEFT
C.R.	CURVE RIGHT

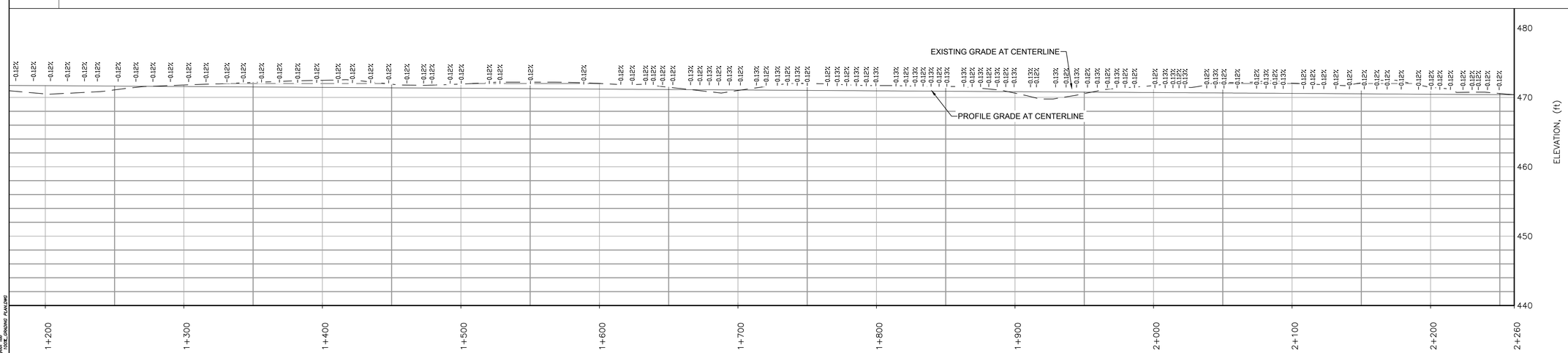

HORIZONTAL SCALE: 1" = 40'
VERTICAL SCALE: 1" = 4'

100% DESIGN
FINAL DESIGN
ISSUE FOR BID & CONSTRUCTION

REGISTERED PROFESSIONAL ENGINEER 80570PE OREGON JUNE 02, 2010 DANIEL E. SCHALL 6/5/15 EXP: 6/30/16

willamalane Park and Recreation District

LANDSCAPE ARCHITECTS SCHIRMER SATRE GROUP

Revisions and Addendums			
Description	Date	No.	By
60% DESIGN	4/7/14	1	DS
REVISED 60% DESIGN	9/12/14	2	DS
90% DESIGN	12/12/14	3	DS
DRAFT 100% DESIGN	5/15/15	4	DS
FINAL 100% DESIGN	6/5/15	5	DS

amec foster wheeler

SPRINGFIELD OREGON

THE CITY OF SPRINGFIELD
DEVELOPMENT & PUBLIC WORKS
225 FIFTH STREET
SPRINGFIELD, OREGON 97477
VOICE: 541-726-3753
FAX: 541-726-3689
WWW.SPRINGFIELD-OR.GOV

DESIGN: DS | DRAWN: PM | CHECK: HM | PROJ. NO: P21052 | BID ON: 6/10/15

SPRINGFIELD MILL RACE STORMWATER FACILITY, BOOTH KELLY TRAILHEAD & MILL RACE PATH

MILL RACE PATH PLAN & PROFILE II

THIS DRAWING IS FULL SIZE WHEN PLOTTED AT 22"x34".

Plotted by/CASTRITY, PATRICK on Friday, June 05, 2015 at 6:55:13 AM from the C-23 layout tab
File: Honey-Potlatch\12\12001\12700\12700\1\dwg\L_108E.DESIGN\108-011_C21-C23 - 108E.dwg(MILL RACE PLAN II.dwg)

STANDARD EROSION CONTROL NOTES

1. PRIOR TO ANY GROUND DISTURBANCE ON THE SITE ONE INSPECTION WITH LDAP STAFF IS REQUIRED. ISSUANCE OF THIS PLAN DOES NOT RELIEVE THE PERMIT HOLDER AND OR THE CONTRACTOR FROM ALL OTHER PERMITTING REQUIREMENTS. PRIOR TO BEGINNING CONSTRUCTION ACTIVITIES, ALL OTHER NECESSARY APPROVALS SHALL BE OBTAINED.

2. THE EROSION AND SEDIMENT CONTROL (ESC) MEASURES SHOWN ON THE PLAN ARE THE MINIMUM REQUIREMENTS FOR ANTICIPATED SITE CONDITIONS. DURING THE CONSTRUCTION PERIOD, THESE MEASURES SHALL BE UPGRADED AS NEEDED FOR UNEXPECTED STORM EVENTS AND TO ENSURE THAT SEDIMENT AND SEDIMENT-LADEN WATER DOES NOT LEAVE THE SITE.

3. THE IMPLEMENTATION OF THE EROSION AND SEDIMENT CONTROL PLAN (ESCP) AND THE CONSTRUCTION, MAINTENANCE, REPLACEMENT, AND UPGRADING OF THE EROSION AND SEDIMENT CONTROL MEASURES IS THE RESPONSIBILITY OF THE PERMIT HOLDER AND OR THE CONTRACTOR UNTIL ALL CONSTRUCTION IS COMPLETED AND ACCEPTED AND VEGETATION / LANDSCAPING IS ESTABLISHED.

4. THE BOUNDARIES OF THE LIMITS OF CONSTRUCTION SHOWN ON THIS PLAN SHALL BE CLEARLY FLAGGED IN THE FIELD BY THE ENGINEER PRIOR TO CONSTRUCTION. DURING THE CONSTRUCTION PERIOD, NO DISTURBANCE BEYOND THE FLAGGED CLEARING LIMITS SHALL BE PERMITTED. THE FLAGGING SHALL BE MAINTAINED BY THE PERMIT HOLDER AND OR THE CONTRACTOR FOR THE DURATION OF CONSTRUCTION.

5. THE EROSION AND SEDIMENT CONTROL MEASURES ON ACTIVE SITES SHALL BE INSPECTED AND MAINTAINED DAILY AND WITHIN THE 24 HOURS AFTER ANY STORM EVENT OF GREATER THAN 0.5 INCHES OF RAIN PER 24 HOUR PERIOD. MEASURES SHALL BE INSPECTED BY THE PERMIT HOLDER AND OR THE CONTRACTOR AFTER EACH RAINFALL AND AT LEAST DAILY DURING PROLONGED RAINFALL. ANY REQUIRED REPAIRS OR ADJUSTMENTS SHALL BE MADE IMMEDIATELY. THE EROSION AND SEDIMENT CONTROL MEASURES ON INACTIVE SITES SHALL BE INSPECTED A MINIMUM OF ONCE EVERY TWO (2) WEEKS OR WITHIN 48 HOURS FOLLOWING A STORM EVENT.

6. ALL EROSION AND SEDIMENT CONTROL MEASURES SHALL BE PROTECTED FROM DAMAGE AT ALL TIMES. CONTROL MEASURES SHALL REMAIN IN PLACE UNTIL PERMANENT RE-VEGETATION HAS BEEN STABILIZED. ANY MEASURE THAT IS DAMAGED OR DESTROYED SHALL BE REPAIRED OR REPLACED IMMEDIATELY.

7. ANY AREAS OF EXPOSED SOILS, INCLUDING ROADWAY EMBANKMENTS, THAT WILL NOT BE DISTURBED FOR TWO DAYS DURING THE WET SEASON (OCTOBER 1 TO APRIL 30) OR SEVEN DAYS DURING THE DRY SEASON (MAY 1 TO SEPTEMBER 30) SHALL BE IMMEDIATELY STABILIZED WITH AN APPROVED ESC METHOD (SEEDING & MULCHING WITH STRAW, BARK, COMPOST, OR PLASTIC COVERING, ECT.).

8. STREET SWEEPING SHALL BE PERFORMED AS NEEDED OR WHEN DIRECTED BY THE CITY INSPECTOR TO INSURE PUBLIC RIGHT-OF-WAYS ARE KEPT CLEAN AND FREE OF DEBRIS. STREET FLUSHING IS PROHIBITED.

9. WHEN TRUCKING SATURATED SOILS FROM THE SITE, EITHER WATER-TIGHT TRUCKS SHALL BE USED OR LOADS SHALL BE DRAINED ON SITE UNTIL DRIPPING HAS BEEN REDUCED TO NO MORE THAN ONE GALLON PER HOUR. SEDIMENT LADEN WATER WILL NOT BE ALLOWED TO ENTER THE STORM WATER SYSTEM

10. EXTRACTED GROUND WATER FROM EXCAVATED TRENCHES SHALL BE DISPOSED OF IN A SUITABLE MANNER WITHOUT DAMAGE TO ADJACENT PROPERTY, CITY'S STORM WATER SYSTEM, WATER FEATURES, AND RELATED NATURAL RESOURCES. APPROVAL OF A DEWATERING SYSTEM DOES NOT GUARANTEE THAT IT WILL MEET COMPLIANCE OR BE ACCEPTABLE FOR USE IN ALL SITUATIONS. MODIFICATIONS TO THE DEWATERING SYSTEM WILL BE REQUIRED IF COMPLIANCE CAN NOT BE MET. AT NO TIME WILL SEDIMENT LADEN WATER BE ALLOWED TO LEAVE THE CONSTRUCTION SITE.

11. A SUPPLY OF MATERIALS NECESSARY TO MEET COMPLIANCE AND IMPLEMENT THE LDAP OR OTHER BEST MANAGEMENT EROSION PRACTICES UNDER ALL WEATHER CONDITIONS SHALL BE MAINTAINED AT ALL TIMES ON THE CONSTRUCTION SITE.

12. NO HAZARDOUS SUBSTANCES, SUCH AS PAINTS, THINNERS, FUELS AND OTHER CHEMICALS SHALL BE RELEASED ONTO THE SITE, ADJACENT PROPERTIES, OR INTO WATER FEATURES, THE CITY'S STORM WATER SYSTEM, OR RELATED NATURAL RESOURCES.

13. THE ESC FACILITIES SHALL BE INSPECTED DAILY BY THE CONTRACTOR AND MAINTAINED TO ENSURE CONTINUED PROPER FUNCTIONING. WRITTEN RECORDS SHALL BE KEPT OF WEEKLY REVIEWS OF THE ESC FACILITIES DURING THE WET SEASON (OCTOBER 1 TO APRIL 30) AND OF MONTHLY REVIEWS DURING THE DRY SEASON (MAY1 TO SEPTEMBER 30).

14. STOCKPILED SOIL SHALL BE PLACED IN A STABLE LOCATION AND CONFIGURATION. STOCKPILES SHALL BE COVERED WITH PLASTIC SHEETING WITH A BARRIER AROUND THE PERIMETER. SEE DETAIL I ON SHEET C-28.

15. BMPs SUCH AS WATTLES AND INLET PROTECTION SHALL BE USED TO PREVENT SEDIMENT FROM REACHING DISCHARGE POINTS. SEE DETAILS D & F ON SHEET C-28.

16. IF APPLICABLE, ACTIVE INLETS TO STORM WATER SYSTEMS SHALL BE PROTECTED THROUGH THE USE OF APPROVED INLET PROTECTION MEASURES. ALL INLET PROTECTION MEASURES ARE TO BE REGULARLY INSPECTED AND MAINTAINED AS NEEDED. SEE DETAIL F ON SHEET C-28.

17. PERIMETER FENCE OR HIGH VISIBILITY MARKING TAPE SHALL BE AROUND WETLAND AND ANY OTHER SENSITIVE AREAS WITH A 25 FOOT BUFFER. HEAVY EQUIPMENT AND VEHICLES SHALL NOT ENTER BUFFER ZONE. SEE DETAIL B ON SHEET C-28.

18. SEDIMENT BARRIERS MAY INCLUDE: COMPOST BERM, STRAW WATTLES, OR OTHER APPROVED MATERIALS. SEE DETAILS A & D ON SHEET C-28.

19. CONSTRUCTION ENTRANCES SHALL BE INSTALLED AT THE BEGINNING OF CONSTRUCTION AND MAINTAINED FOR THE DURATION OF THE PROJECT. SEE DETAIL E ON SHEET C-28. ADDITIONAL MEASURES MAY BE REQUIRED TO ENSURE THAT ALL PAVED AREAS ARE KEPT CLEAN FOR THE DURATION OF THE PROJECT.

20. TIRE WASH SHALL BE INSTALLED AT THE BEGINNING OF CONSTRUCTION AND MAINTAINED FOR THE DURATION OF THE PROJECT. SEE DETAIL J ON SHEET C-28.

21. CONCRETE WASHOUT TO BE INSTALLED.

22. EXPOSED CUT OR FILL AREAS SHALL BE STABILIZED THROUGH THE USE OF TEMPORARY SEEDING AND MULCHING, MATTING, MID-SLOPE WATTLES, OR OTHER APPROPRIATE MEASURES. SLOPES EXCEEDING 25% MAY REQUIRE ADDITIONAL EROSION CONTROL MEASURES.

23. SLOPES TO RECEIVE TEMPORARY OR PERMANENT SEEDING SHALL HAVE THE SURFACE ROUGHENED BY MEANS OF TRACK-WALKING OR THE USE OF OTHER APPROVED IMPLEMENTS. SEE DETAIL G ON SHEET C-28.

24. LONG TERM SLOPE STABILIZATION MEASURES SHALL INCLUDE THE ESTABLISHMENT OF PERMANENT VEGETATIVE COVER VIA SEEDING WITH APPROVED MIX AND APPLICATION RATE.

25. ESCP SHALL COMPLY WITH THE CITY'S 1200-CA PERMIT, AND THESE NOTES AND DETAILS.

26. THESE PLANS DO NOT RELIEVE THE PERMIT HOLDER AND OR THE CONTRACTOR FROM ALL OTHER PERMITTING REQUIREMENTS. PRIOR TO BEGINNING CONSTRUCTION ACTIVITIES, ALL OTHER NECESSARY APPROVALS SHALL BE OBTAINED.

27. IN THE EVENT THE ESC FACILITIES ARE NOT FUNCTIONING PROPERLY, THE CONTRACTOR IS RESPONSIBLE FOR IMMEDIATELY IMPLEMENTING CHANGES AS DIRECTED BY THE ENGINEER OR INSPECTOR. THE ENGINEER, INSPECTOR OR THE CITY MAY STOP ALL CONSTRUCTION ACTIVITY ON SITE UNTIL THE EROSION PROBLEM IS CORRECTED AND ALL EROSION AND SEDIMENTATION CONTROL (ESC) FACILITIES ARE FUNCTIONING PROPERLY. IF THE CONTRACTOR DOES NOT IMMEDIATELY IMPLEMENT CHANGES TO THE EROSION AND SEDIMENTATION CONTROL (ESC) IDENTIFIED BY THE ENGINEER OR INSPECTOR, THE CITY MAY IMPLEMENT THE NECESSARY CHANGES AND REQUIRE PAYMENT FROM THE CONTRACTOR PRIOR TO PROJECT ACCEPTANCE BY THE CITY.

28. IN PREPARATION OF THE WET SEASON, ALL DISTURBED AREAS SHALL BE REVIEWED TO IDENTIFY WHICH ONES CAN BE SEEDED IN PREPARATION FOR THE WINTER RAINS. A SKETCH MAP OF THOSE AREAS TO BE SEEDED AND THOSE AREAS TO REMAIN UNCOVERED SHALL BE SUBMITTED TO THE CITY & ENGINEER BY SEPTEMBER 15. THE CITY CAN REQUIRE SEEDING OF ADDITIONAL AREAS IN ORDER TO PROTECT SURFACE WATERS, ADJACENT PROPERTIES, OR DRAINAGE FACILITIES. DISTURBED AREAS IDENTIFIED FOR SEEDING AREAS SHALL BE SEEDED PRIOR TO THE BEGINNING OF THE WET SEASON (OCTOBER 1).

REGISTERED PROFESSIONAL ENGINEER
80570PE
OREGON
JUNE 02, 2010
DANIEL E. SCHALL
6/5/15
EXP: 6/30/16

100% DESIGN
FINAL DESIGN
ISSUE FOR BID & CONSTRUCTION

willamalane Park and Recreation District

LANDSCAPE ARCHITECTS SCHIRMER SATRE GROUP

Revisions and Addendums			
Description	Date	No.	By
60% DESIGN	4/7/14	1	DS
REVISED 60% DESIGN	9/12/14	2	DS
90% DESIGN	12/12/14	3	DS
DRAFT 100% DESIGN	5/15/15	4	DS
FINAL 100% DESIGN	6/5/15	5	DS

amec foster wheeler

SPRINGFIELD OREGON

THE CITY OF SPRINGFIELD
DEVELOPMENT & PUBLIC WORKS
225 FIFTH STREET
SPRINGFIELD, OREGON 97477
VOICE: 541-726-3753
FAX: 541-726-3689
WWW.SPRINGFIELD-OR.GOV

DESIGN: DS | DRAWN: PM | CHECK: HM | PROJ. NO: P21052 | BID ON: 6/10/15

SPRINGFIELD MILL RACE STORMWATER FACILITY, BOOTH KELLY TRAILHEAD & MILL RACE PATH

EROSION & SEDIMENT CONTROL PLAN NOTES

THIS DRAWING IS FULL SIZE WHEN PLOTTED AT 22"x34".

Plotted by/CSURTHY; PATRICK on Friday, June 05, 2015 at 7:16:12 AM from the C-24 layout tab
File: Home/Projects\120501\12301\12301\12301\WWL_LDAP_LEGAL\C24-C28 - ESCP_100%.dwg

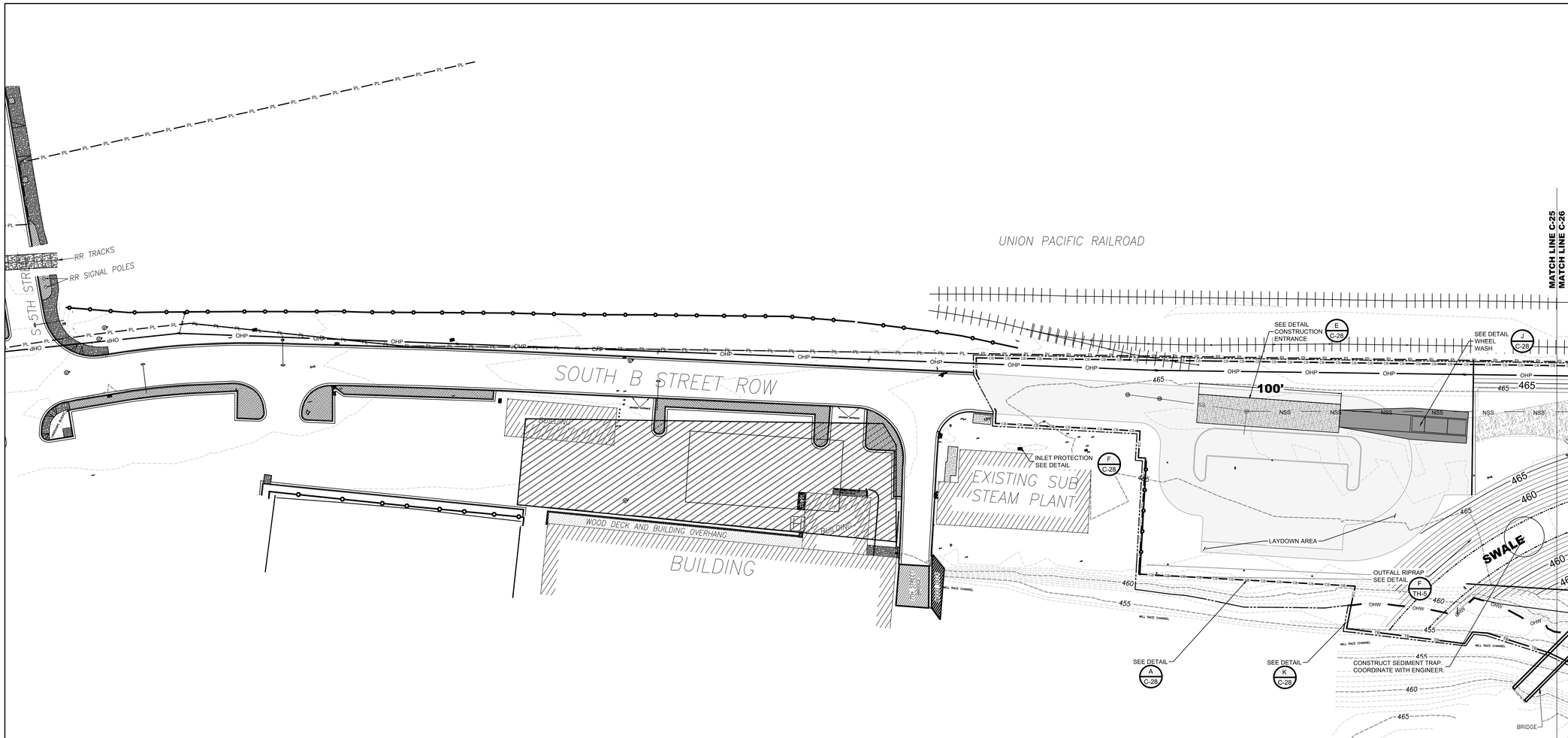

LEGEND

- STORM SEWER MANHOLE
- SANITARY SEWER MANHOLE
- AREA DRAIN
- UTILITY POLE
- GUY-WIRE ANCHOR
- RAILROAD TRACKS
- FENCE
- OHP — OVERHEAD POWER LINES
- PROPOSED ELECTRIC CONDUIT
- OHW — ORDINARY HIGH WATER
- SD — EXISTING STORM SEWER
- SS — EXISTING SANITARY SEWER
- NSS — NEW SANITARY SERWER
- EXISTING MAJOR CONTOUR
- EXISTING MINOR CONTOUR
- PROPOSED MAJOR CONTOUR
- PROPOSED MINOR CONTOUR
- PL — PROPERTY BOUNDARY
- 20' WIDE SWALE
- MILL RACE PATH
- ASPHALT TRANSITION
- LIMITS OF CONSTRUCTION
- CB — COMPOST BERM
- TB — TURBIDITY BARRIER
- TIRE WASH
- CONSTRUCTION ENTRANCE

REGISTERED PROFESSIONAL ENGINEER 80570PE OREGON JUNE 02, 2010 DANIEL E. SCHALL 6/5/15
EXP: 6/30/16

SCALE: 1" = 40'
40' 20' 0 40'

100% DESIGN
FINAL DESIGN
ISSUE FOR BID & CONSTRUCTION

NOTE:

1. SURVEY OF EXISTING CONDITIONS PROVIDED BY THE CITY OF SPRINGFIELD, P21052 Mill Race Stormwater Facility REVISION 10 102114.dwg, DATED OCTOBER, 2014.

willamalane Park and Recreation District

LANDSCAPE ARCHITECTS SCHIRMER SATRE GROUP

Revisions and Addendums

Description	Date	No.	By
60% DESIGN	4/7/14	1	DS
REVISED 60% DESIGN	9/12/14	2	DS
90% DESIGN	12/12/14	3	DS
DRAFT 100% DESIGN	5/15/15	4	DS
FINAL 100% DESIGN	6/5/15	5	DS

amec foster wheeler

SPRINGFIELD OREGON

THE CITY OF SPRINGFIELD
DEVELOPMENT & PUBLIC WORKS
225 FIFTH STREET
SPRINGFIELD, OREGON 97477
VOICE: 541-726-3753
FAX: 541-726-3689
WWW.SPRINGFIELD-OR.GOV

DESIGN: DS **DRAWN:** PM **CHECK:** HM **PROJ. NO:** P21052 **BID ON:** 6/10/15

SPRINGFIELD MILL RACE STORMWATER FACILITY, BOOTH KELLY TRAILHEAD & MILL RACE PATH

EROSION & SEDIMENT CONTROL PLAN - WEST

THIS DRAWING IS FULL SIZE WHEN PLOTTED AT 22"x34".

Plotted by:MCARTHY, PATRICK on Friday, June 05, 2015 at 7:16:21 AM from the C-25 layout tab
File Name:J:\12000\12300\12360\12360\Dwg_Mod_C\P21052\C24-C28 - 25X_1088.dwg

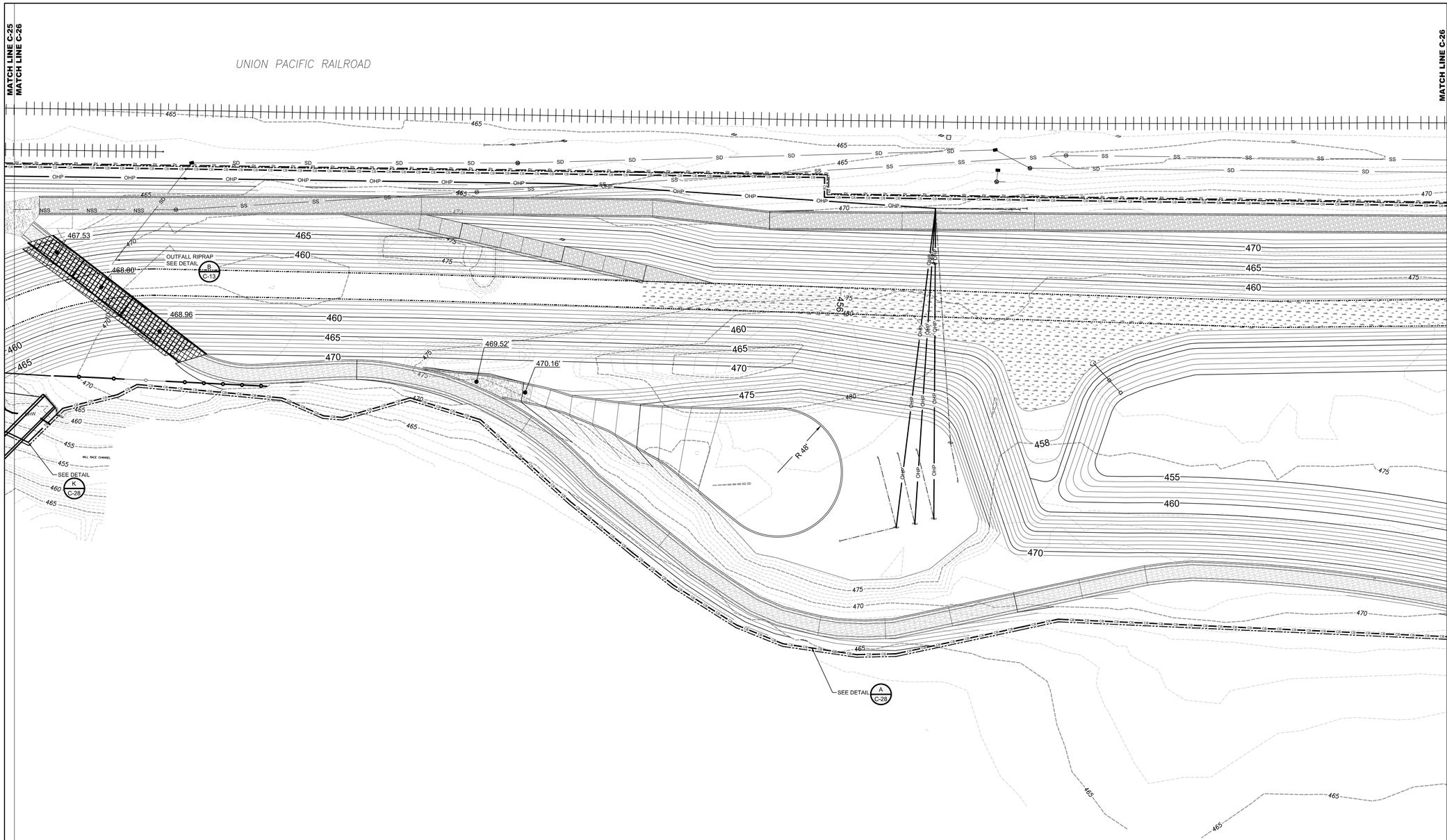

LEGEND

- STORM SEWER MANHOLE
- SANITARY SEWER MANHOLE
- AREA DRAIN
- UTILITY POLE
- GUY-WIRE ANCHOR
- RAILROAD TRACKS
- FENCE
- OHP — OVERHEAD POWER LINES
- PROPOSED ELECTRIC CONDUIT
- GUY-WIRE
- SD — EXISTING STORM SEWER
- SS — EXISTING SANITARY SEWER
- EXISTING MAJOR CONTOUR
- EXISTING MINOR CONTOUR
- PROPOSED MAJOR CONTOUR
- PROPOSED MINOR CONTOUR
- PL — PROPERTY BOUNDARY
- 20' WIDE SWALE
- MILL RACE PATH
- ASPHALT TRANSITION
- ACCESS ROAD
- DRIVABLE GRASS PAVER
- LIMITS OF CONSTRUCTION
- CB — COMPOST BERM
- TB — TURBIDITY BARRIER
- CONSPAN BRIDGE

REGISTERED PROFESSIONAL ENGINEER 80570PE OREGON JUNE 02, 2010 DANIEL E. SCHALL 6/5/15
EXP. 6/30/16

SCALE: 1" = 40'
40' 20' 0 40'

N

100% DESIGN
FINAL DESIGN
ISSUE FOR BID & CONSTRUCTION

NOTE:

1. SURVEY OF EXISTING CONDITIONS PROVIDED BY THE CITY OF SPRINGFIELD, P21052 Mill Race Stormwater Facility REVISION 10 102114.dwg, DATED OCTOBER, 2014.

willamalane Park and Recreation District

LANDSCAPE ARCHITECTS SCHIRMER SATRE GROUP

Revisions and Addendums

Description	Date	No.	By
60% DESIGN	4/7/14	1	DS
REVISED 60% DESIGN	9/12/14	2	DS
90% DESIGN	12/12/14	3	DS
DRAFT 100% DESIGN	5/15/15	4	DS
FINAL 100% DESIGN	6/5/15	5	DS

amec foster wheeler

SPRINGFIELD OREGON

THE CITY OF SPRINGFIELD
DEVELOPMENT & PUBLIC WORKS
225 FIFTH STREET
SPRINGFIELD, OREGON 97477
VOICE: 541-726-3753
FAX: 541-726-3689
WWW.SPRINGFIELD-OR.GOV

DESIGN: DS **DRAWN:** PM **CHECK:** HM **PROJ. NO:** P21052 **BID ON:** 6/10/15

SPRINGFIELD MILL RACE STORMWATER FACILITY, BOOTH KELLY TRAILHEAD & MILL RACE PATH

EROSION & SEDIMENT CONTROL PLAN - CENTRAL

THIS DRAWING IS FULL SIZE WHEN PLOTTED AT 22"x34".

Plotted by/CSCARTHY; PATRICK on Friday, June 05, 2015 at 7:16:31 AM from the C-26 layout tab
File Name/Pathnam \\2050\12300\12300\12300\Layout_C26E.DWG\C24-C29 - ESCP_10082.dwg

MATCH LINE C-26
MATCH LINE C-27

UNION PACIFIC RAILROAD

OUTFALL RIPRAP SEE DETAIL B / C-13

SEE DETAIL A / C-28

470.67'
470.79'
470.58'
470.43'

LEGEND

- STORM SEWER MANHOLE
- SANITARY SEWER MANHOLE
- AREA DRAIN
- UTILITY POLE
- GUY-WIRE ANCHOR
- RAILROAD TRACKS
- FENCE
- OHP — OVERHEAD POWER LINES
- PROPOSED ELECTRIC CONDUIT
- GUY-WIRE
- SD — EXISTING STORM SEWER
- NSD — NEW STORM SEWER
- SS — EXISTING SANITARY SEWER
- EXISTING MAJOR CONTOUR
- EXISTING MINOR CONTOUR
- PROPOSED MAJOR CONTOUR
- PROPOSED MINOR CONTOUR
- PL — PROPERTY BOUNDARY
- 20' WIDE SWALE
- MILL RACE PATH
- ASPHALT TRANSITION
- ACCESS ROAD
- DRIVABLE GRASS PAVER
- LIMITS OF CONSTRUCTION
- CB — COMPOST BERM
- TB — TURBIDITY BARRIER
- CONSPAN BRIDGE

REGISTERED PROFESSIONAL ENGINEER 80570PE OREGON JUNE 02, 2010 DANIEL E. SCHALL
EXP. 6/30/16 6/5/15

SCALE: 1" = 40'
40' 20' 0 40'

N

100% DESIGN
FINAL DESIGN
ISSUE FOR BID & CONSTRUCTION

NOTE:

1. SURVEY OF EXISTING CONDITIONS PROVIDED BY THE CITY OF SPRINGFIELD, P21052 Mill Race Stormwater Facility REVISION 10 102114.dwg, DATED OCTOBER, 2014.

willamalane Park and Recreation District

LANDSCAPE ARCHITECTS SCHIRMER SATRE GROUP

Revisions and Addendums

Description	Date	No.	By
60% DESIGN	4/7/14	1	DS
REVISED 60% DEISGN	9/12/14	2	DS
90% DESIGN	12/12/14	3	DS
DRAFT 100% DESIGN	5/15/15	4	DS
FINAL 100% DESIGN	6/5/15	5	DS

amec foster wheeler

SPRINGFIELD OREGON

THE CITY OF SPRINGFIELD
DEVELOPMENT & PUBLIC WORKS
225 FIFTH STREET
SPRINGFIELD, OREGON 97477
VOICE: 541-726-3753
FAX: 541-726-3689
WWW.SPRINGFIELD-OR.GOV

DESIGN: DS | DRAWN: PM | CHECK: HM | PROJ. NO: P21052 | BID ON: 6/10/15

SPRINGFIELD MILL RACE STORMWATER FACILITY, BOOTH KELLY TRAILHEAD & MILL RACE PATH

EROSION & SEDIMENT CONTROL PLAN - EAST

THIS DRAWING IS FULL SIZE WHEN PLOTTED AT 22"x34".

Plotted by/MCGARTHY, PATRICK on Friday, June 05, 2015 at 7:16:41 AM from the C-27 layout tab
File: Home/Projects\120301\12301\12301\dwg_\1006_DESIGN\C24-C29 - EDPC_1006.dwg

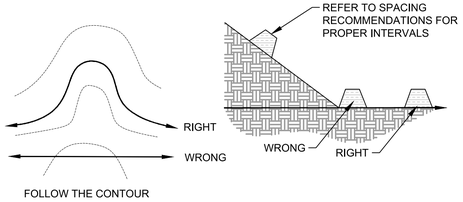

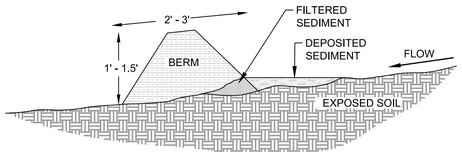

COMPOST BERM — NTS — A / C-28

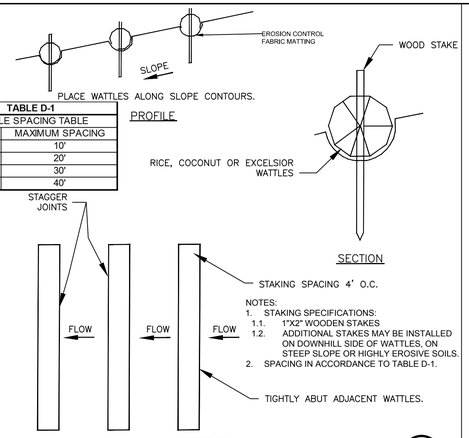

TABLE D-1	
WATTLE SPACING TABLE	
SLOPE	MAXIMUM SPACING
1:1	10'
2:1	20'
3:1	30'
4:1	40'

NOTES:
1. STAKING SPECIFICATIONS:
   1.1. 1"X2" WOODEN STAKES
   1.2. ADDITIONAL STAKES MAY BE INSTALLED ON DOWNHILL SIDE OF WATTLES, ON STEEP SLOPE OR HIGHLY EROSIVE SOILS.
2. SPACING IN ACCORDANCE TO TABLE D-1.

WATTLES — NTS — D / C-28

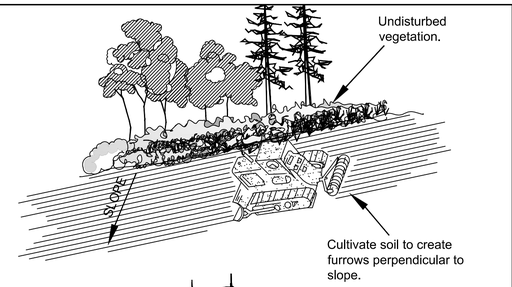

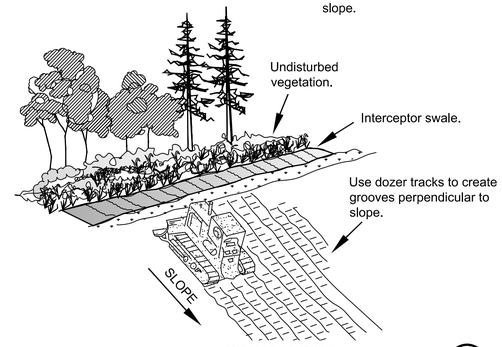

SURFACE ROUGHING — NTS — G / C-28

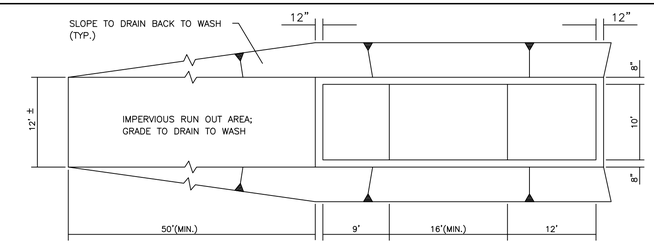

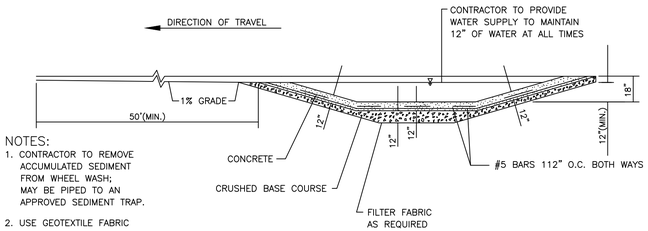

NOTES:
1. CONTRACTOR TO REMOVE ACCUMULATED SEDIMENT FROM WHEEL WASH; MAY BE PIPED TO AN APPROVED SEDIMENT TRAP.
2. USE GEOTEXTILE FABRIC WITH AGGREGATE FOR A TEMPORARY TIRE WASH.

TIRE WASH (DRIVE-THROUGH) — NTS — J / C-28

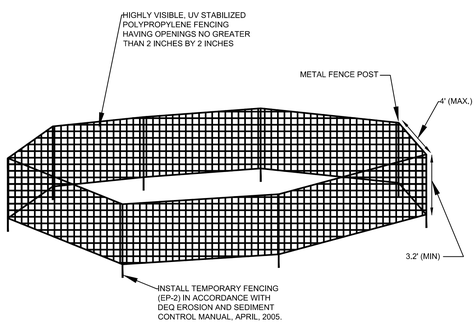

NOTE: INSTALL HIGH VISIBILITY MARKING TAPE AROUND PERIMETER WHERE INSTALLATION OF FENCING IS NOT FEASIBLE.

CONSTRUCTION FENCE — NTS — B / C-28

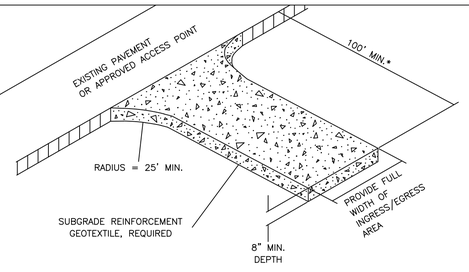

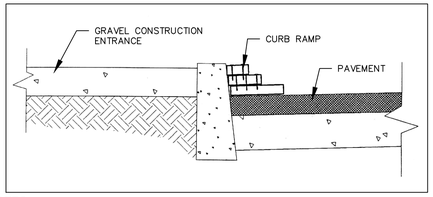

NOTES:
DIMENSIONS
100' LONG BY 20' WIDE
3-6" CLEAN ROCK

GOVERNING AUTHORITY WILL REQUIRE GEOTEXTILE FABRIC TO PREVENT SUB-SOIL PUMPING.

CONSTRUCTION ENTRANCE — NTS — E / C-28

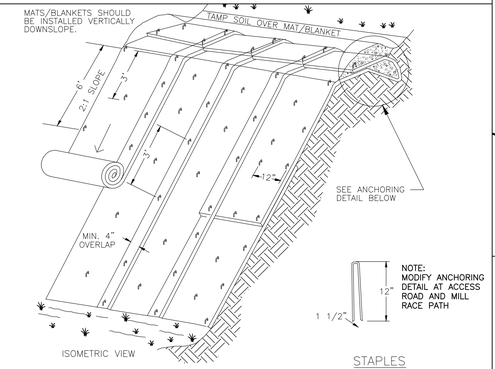

NOTES:
1. SLOPE SURFACE SHALL BE FREE OF ROCKS, CLODS, STICKS AND GRASS. MATS/BLANKETS SHALL HAVE GOOD SOIL CONTACT.
2. APPLY PERMANENT SEEDING BEFORE PLACING BLANKETS.
3. LAY BLANKETS LOOSELY AND STAKE OR STAPLE TO MAINTAIN DIRECT CONTACT WITH THE SOIL. DO NOT STRETCH.

NOTE: MODIFY ANCHORING DETAIL AT ACCESS ROAD AND MILL RACE PATH

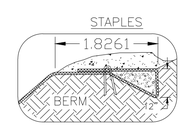

ANCHORING DETAIL

EROSION CONTROL FABRIC MATTING — NTS — H / C-28

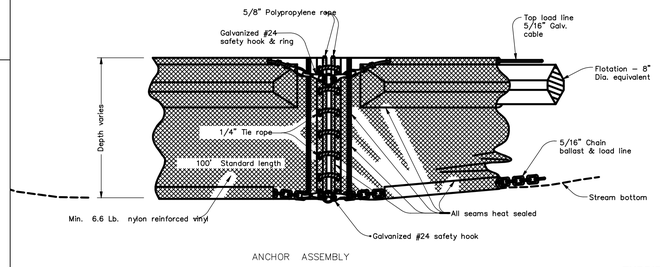

ANCHOR ASSEMBLY

NOTE:
Components of this barrier may be similar or identical to proprietary designs. Any infringement on the proprietary rights of the designer shall be the sole responsibility of the contractor. Substitutions shall be as approved by the engineer.

TURBIDITY BARRIER — NTS — K / C-28

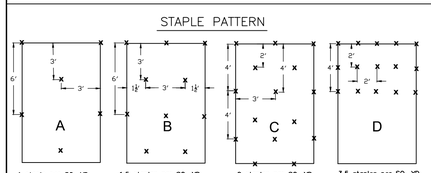

*Minimum staple pattern guide and reccommendation for slope and channel application.

LENGTH AND SLOPE TABLE

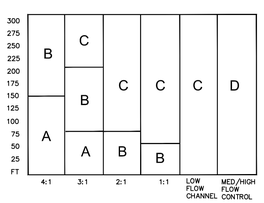

MATTING STAPLE TABLE — NTS — C / C-28

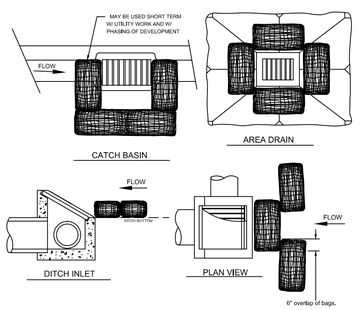

NOTES:
1. ADDITIONAL MEASURES MUST BE CONSIDERED DEPENDING ON SOIL TYPES.
2. BIO-FILTER BAGS SHOULD BE STAKED WHERE APPLICABLE USING (2) 1"x2"WOODEN STAKES OR APPROVED EQUAL PER BAG.
3. WHEN USING 30" BIO-BAGS TO PROTECT A CATCH BASIN YOU MUST HAVE 4 BAGS AND THEY SHALL BE OVERLAPPED BY 6".

INLET PROTECTION — NTS — F / C-28

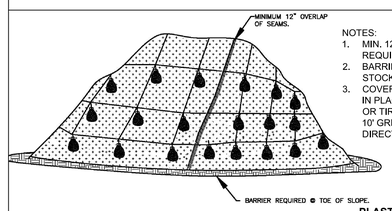

PLASTIC SHEETING

NOTES:
1. MIN. 12" OVERLAP OF ALL SEAMS REQUIRED.
2. BARRIER REQUIRED @ TOE OF STOCK PILE.
3. COVERING MAINTAINED TIGHTLY IN PLACE BY USING SANDBAGS OR TIRES ON ROPES WITH A MAX. 10' GRID SPACING IN ALL DIRECTIONS.

PLASTIC SHEETING — NTS — I / C-28

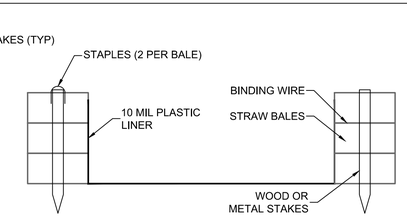

NOTES:
1. ACTUAL LAYOUT DETERMINED IN FIELD
2. THE CONCRETE WASHOUT SIGN SHALL BE INSTALLED WITHIN 30' OF THE TEMPORARY CONCRETE WASHOUT FACILITY

CONCRETE WASHOUT - ABOVE GRADE — NTS — L / C-28

REGISTERED PROFESSIONAL ENGINEER 80570PE OREGON JUNE 02, 2010 DANIEL E. SCHALL
EXP: 6/30/16 6/5/15

100% DESIGN
FINAL DESIGN
ISSUE FOR BID & CONSTRUCTION

willamalane Park and Recreation District

LANDSCAPE ARCHITECTS SCHIRMER SATRE GROUP

Revisions and Addendums			
Description	Date	No.	By
60% DESIGN	4/7/14	1	DS
90% DESIGN	12/12/14	2	DS
DRAFT 100% DEISGN	5/15/15	3	DS
FINAL 100% DESIGN	6/5/15	5	DS

amec foster wheeler

SPRINGFIELD OREGON

THE CITY OF SPRINGFIELD
DEVELOPMENT & PUBLIC WORKS
225 FIFTH STREET
SPRINGFIELD, OREGON 97477
VOICE: 541-726-3753
FAX: 541-726-3689
WWW.SPRINGFIELD-OR.GOV

DESIGN: DS | DRAWN: PM | CHECK: HM | PROJ. NO: P21052 | BID ON: 6/10/15

SPRINGFIELD MILL RACE STORMWATER FACILITY, BOOTH KELLY TRAILHEAD & MILL RACE PATH
EROSION & SEDIEMNT CONTROL DETAILS

SHEET C-28
29 OF 47

THIS DRAWING IS FULL SIZE WHEN PLOTTED AT 22"x34".

Plotted by:MCCARTY, PATRICK on Friday, June 05, 2015 at 7:17:38 AM from the C-28 layout tab
File Name/Path:\\12D001\12D01\12P21\Shell_L0004_EROSN\C24-C28 - EROSN.DWG

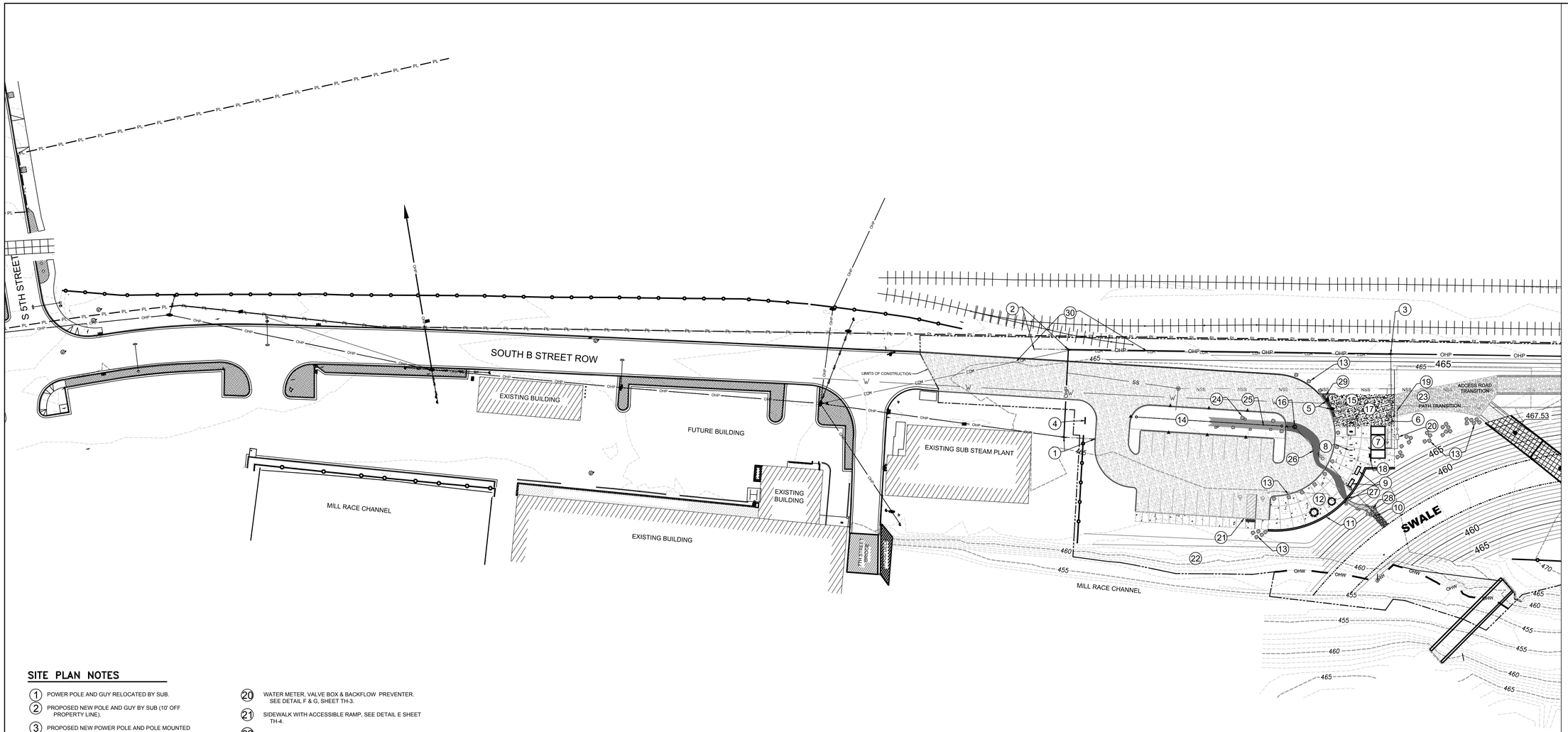

LEGEND

- STORM SEWER MANHOLE
- SANITARY SEWER MANHOLE
- RAIN GARDEN INLET
- AREA DRAIN
- UTILITY POLE
- GUY-WIRE ANCHOR
- CONSTRUCTION NOTES
- RAILROAD TRACKS
- FENCE
- OHP — OVERHEAD POWER LINE
- COM — OVERHEAD COMMUNICATION LINE
- E — PROPOSED ELECTRIC CONDUIT
- GUY-WIRE
- SD — EXISTING STORM SEWER
- NSD — NEW STORM SEWER
- SS — EXISTING SANITARY SEWER
- NSS — NEW SANITARY SEWER
- EXISTING MAJOR CONTOUR
- EXISTING MINOR CONTOUR
- PROPOSED MAJOR CONTOUR
- PROPOSED MINOR CONTOUR
- W — PROPOSED FUTURE SUB WATERLINE
- RAIN GARDEN OVERFLOW DRAIN AND PERFORATED PIPE
- LIMITS OF CONSTRUCTION
- OHW — ORDINARY HIGH WATER
- PL — PROPERTY BOUNDARY
- 20' WIDE SWALE
- MILL RACE PATH
- MAINTENANCE ACCESS ROAD
- ASPHALT
- 4" CONCRETE
- 6" CONCRETE
- CONSPAN BRIDGE

SITE PLAN NOTES

1. POWER POLE AND GUY RELOCATED BY SUB.
2. PROPOSED NEW POLE AND GUY BY SUB (10' OFF PROPERTY LINE).
3. PROPOSED NEW POWER POLE AND POLE MOUNTED TRANSFORMER WITH SERVICE DROP BY SUB.
4. PROJECT SIGNAGE, SEE DETAIL SHEET TH-12.
5. BOLLARD (QTY. 2), SEE DETAIL SHEET TH-9.
6. BURIED PVC CONDUIT (3 - 2" PVC CONDUIT & 1 - 3" PVC CONDUIT); 3" FOR ELECTRICAL SERVICE, 2" FOR COMMUNICATION & STUB-UP SPARES AT POLE & IN RESTROOM.
7. RESTROOMS, SEE DETAIL SHEET TH-6 & TH-7.
8. BIKE RACKS (QTY. 4), SEE DETAIL SHEET TH-9.
9. BENCH (QTY. 2), SEE DETAIL SHEET TH-9.
10. RAIN GARDEN DISCHARGE PIPE, 8" PVC SCH 3034, I.E. 458.39', SEE DETAIL TH-5.
11. SHORT CONCRETE WALL, SEE DETAIL SHEET TH-5.
12. CONCRETE PLAZA WITH PICNIC TABLES (QTY. 2).
13. BOLLARD BOULDERS / SCATTERED BOULDERS. SEE DETAILS 1&2, SHEET L-5.
14. RAIN GARDEN WITH OVERFLOW DRAINS (QTY. 2) AND PERFORATED PIPE, SEE DETAIL SHEET TH-3.
15. SANITARY SEWER - 4" PVC SCH 3034, SLOPE @ 2%, BLIND CONNECTION WITH EXISTING @ APPROXIMATE I.E. 455.22', VERIFY IN FIELD.
16. NEW 42" DIA. STORM SEWER MANHOLE.
17. KIOSK, SEE DETAIL SHEET TH-8
18. TRASH & RECYCLE RECEPTACLE, SEE DETAIL SHEET TH-9
19. NEW 2" PVC SCH 1120 WATERLINE - SEE DETAIL SHEET TH-3. REFERENCE LANDSCAPE PLANS FOR IRRIGATION CONNECTION.
20. WATER METER, VALVE BOX & BACKFLOW PREVENTER. SEE DETAIL F & G, SHEET TH-3.
21. SIDEWALK WITH ACCESSIBLE RAMP, SEE DETAIL E SHEET TH-4.
22. MANUALLY REMOVE ARMENIAN BLACKBERRY AND OTHER NOXIOUS WEEDS, AS DESIGNATED BY OREGON STATE WEED BOARD, IN THE AREA BETWEEN TRAILHEAD AND ORDINARY HIGH WATER LINE. MINIMIZE SOIL DISTURBANCE IN AREAS NOT DESIGNATED FOR OTHER WORK.
23. ASPHALT PATH AND ACCESS ROAD TRANSITION, SEE DETAIL F, SHEET TH-4.
24. RANDOM BOULDERS, COORDINATE WITH LANDSCAPE ARCHITECT, SEE DEATIL 1, SHEET L-5.
25. 3" ROUND RIVER ROCK SET IN FINISH GRADE.
26. VARIABLE WIDTH P.I.P. CONCRETE (2' - 6') FLUSH W/ ADJACENT GRADE. EXPOSED AGGREGATE CONCRETE 1/2" TO 3/8" WITH ACID WASH. APPLY ACRYLIC COLOR WITH SILICA SAND AFTER 28 DAYS. FIELD LOCATE W/ LANDSCAPE ARCHITECT. COORDINATE WITH WILLAMALANE & ENGINEER, SEE DETAILS D & E, SHEET TH-5. REFERENCE DETAIL F, TH-5, FOR COBBLE DETAIL AT SWALE.
27. 3' WIDE LOW ARCH OPENING AT WALL, SEE DETAIL C, SHEET TH-5.
28. CLUSTER OF VARIABLE SIZE BOULDERS SET INTO GRADE OBSCURING OUTFALL.
29. TRUNCATED DOME DETECTABLE WARNING SURFACE, 2' WIDE.
30. COMMUNICATIONS (OVERHEAD) COORDINATE WITH COMCAST - CONTACT TOM HENERTY, (541) 228-1884. REFERENCE SHEET TH-10 FOR DETAILS.

REGISTERED PROFESSIONAL ENGINEER 80570PE OREGON JUNE 02, 2010 DANIEL E. SCHALL
6/5/15
EXP. 6/30/16

SCALE: 1" = 40'
40' 20' 0 40'

100% DESIGN
FINAL DESIGN
ISSUE FOR BID & CONSTRUCTION

willamalane Park and Recreation District

LANDSCAPE ARCHITECTS SCHIRMER SATRE GROUP

Revisions and Addendums

Description	Date	No.	By
30% DESIGN	2/3/15	1	DS
REVISED 30% DESIGN	2/16/15	2	DS
60% DESIGN	4/3/15	3	DS
90% DESIGN	4/24/15	4	DS
DRAFT 100% DESIGN	5/15/15	5	DS
FINAL 100% DESIGN	6/5/15	6	DS

amec foster wheeler

SPRINGFIELD OREGON

THE CITY OF SPRINGFIELD
DEVELOPMENT & PUBLIC WORKS
225 FIFTH STREET
SPRINGFIELD, OREGON 97477
VOICE: 541-726-3753
FAX: 541-726-2309
WWW.SPRINGFIELD-OR.GOV

DESIGN: DS | DRAWN: PM | CHECK: HM | PROJ. NO: P21052 | BID ON: 6/10/15

SPRINGFIELD MILL RACE STORMWATER FACILITY, BOOTH KELLY TRAILHEAD & MILL RACE PATH

TRAILHEAD PROPOSED SITE PLAN

THIS DRAWING IS FULL SIZE WHEN PLOTTED AT 22"x34".

Plotted by:MCCARTY, PATRICK on Friday, June 05, 2015 at 11:18:57 AM from the Th-1 layout tab
File Name/Path:X:\P21052\12250\12250\Draft\L-1002_DESIGN (TH-1) - PROPOSED SITE PLAN_ORIGINAL 1008.DWG

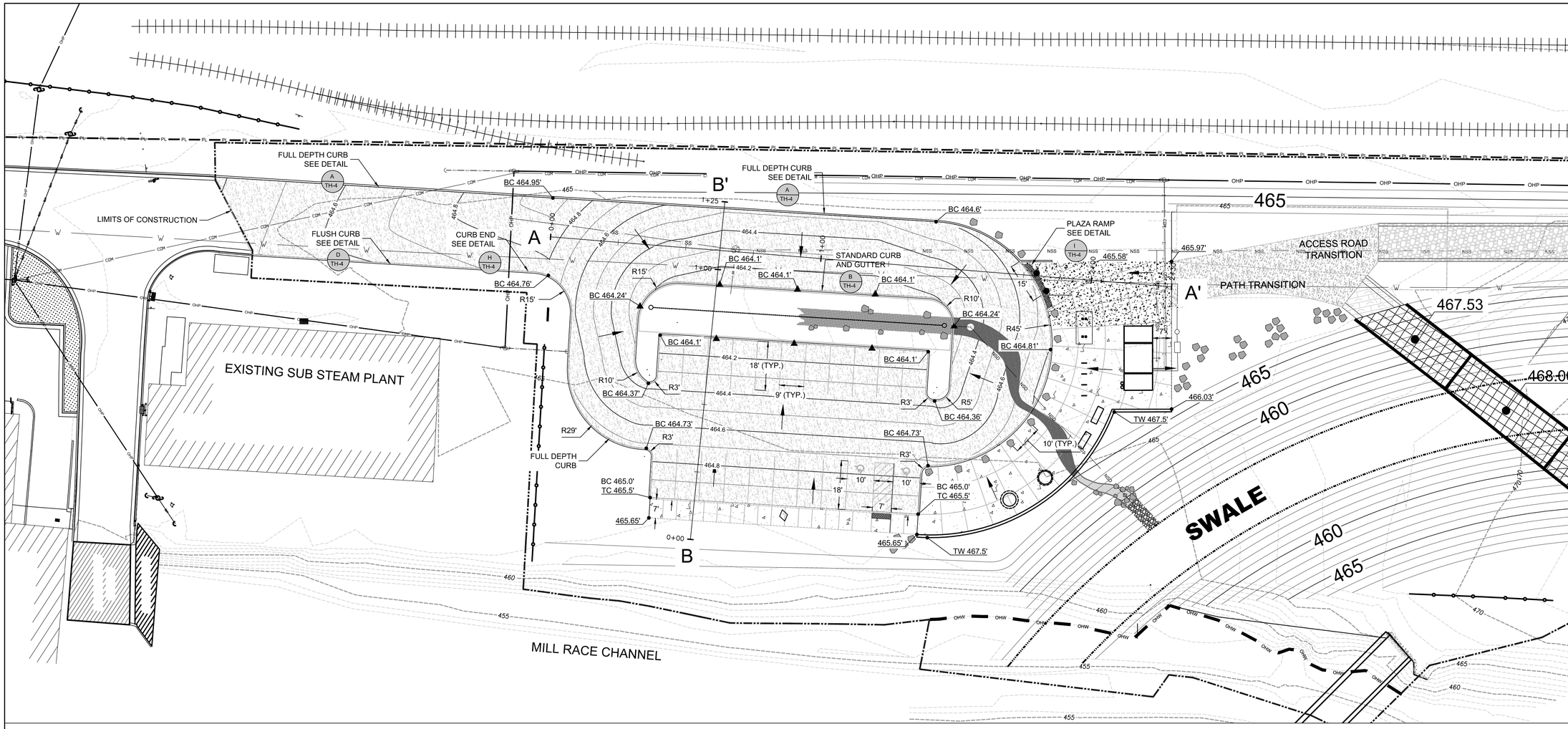

LEGEND

- STORM SEWER MANHOLE
- SANITARY SEWER MANHOLE
- RAIN GARDEN INLET
- AREA DRAIN
- UTILITY POLE
- GUY-WIRE ANCHOR
- CONSTRUCTION NOTES
- RAILROAD TRACKS
- FENCE
- OHP — OVERHEAD POWER LINE
- COM — OVERHEAD COMMUNICATION LINE
- E — PROPOSED ELECTRIC CONDUIT
- GUY-WIRE
- SD — EXISTING STORM SEWER
- NSD — NEW STORM SEWER
- SS — EXISTING SANITARY SEWER
- NSS — NEW SANITARY SEWER
- EXISTING MAJOR CONTOUR
- EXISTING MINOR CONTOUR
- PROPOSED MAJOR CONTOUR
- PROPOSED MINOR CONTOUR
- RAIN GARDEN OVERFLOW DRAIN AND PERFORATED PIPE
- LIMITS OF CONSTRUCTION
- OHW — ORDINARY HIGH WATER
- PL — PROPERTY BOUNDARY
- 20' WIDE SWALE
- MILL RACE PATH
- MAINTENANCE ACCESS ROAD
- ASPHALT
- 4" CONCRETE
- 6" CONCRETE
- CONSPAN BRIDGE
- 467.0' — PROPOSED GRADE
- TW 468.5' — TOP OF WALL ELEVATION
- BC 464.1' — BOTTOM OF CURB ELEVATION
- TC 465.5' — TOP OF CURB ELEVATION
- SLOPE/DRAINAGE DIRECTION

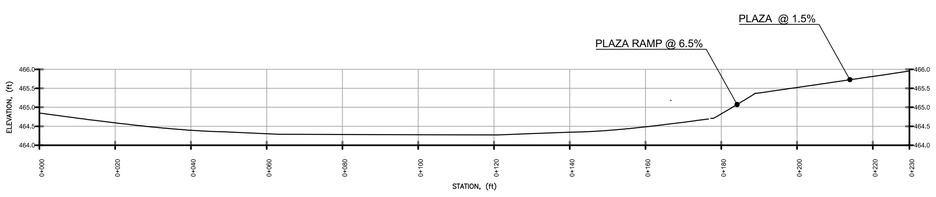

CROSS SECTION A - A'

A / TH-2

HORIZONTAL SCALE: 1" = 20'
VERTICAL SCALE: 1" = 2'

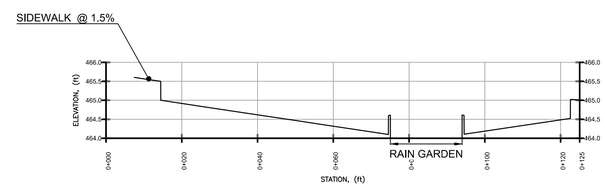

CROSS SECTION B -B'

B / TH-2

HORIZONTAL SCALE: 1" = 20'
VERTICAL SCALE: 1" = 2'

REGISTERED PROFESSIONAL ENGINEER 80570PE OREGON JUNE 02, 2010 DANIEL E. SCHALL
6/5/15
EXP. 6/30/16

SCALE: 1" = 20'
20' 10' 0 20'

N

100% DESIGN
FINAL DESIGN
ISSUE FOR BID & CONSTRUCTION

willamalane Park and Recreation District

LANDSCAPE ARCHITECTS SCHIRMER SATRE GROSS INC.

Revisions and Addendums			
Description	Date	No.	By
30% DESIGN	2/3/15	1	DS
REVISED 30% DESIGN	2/16/15	2	DS
60% DESIGN	4/3/15	3	DS
90% DESIGN	4/24/15	4	DS
DRAFT 100% DESIGN	5/15/15	5	DS
FINAL 100% DESIGN	6/5/15	6	DS

amec foster wheeler

SPRINGFIELD OREGON

THE CITY OF SPRINGFIELD
DEVELOPMENT & PUBLIC WORKS
225 FIFTH STREET
SPRINGFIELD, OREGON 97477
VOICE: 541-726-3753
FAX: 541-726-2309
WWW.SPRINGFIELD-OR.GOV

DESIGN: DS **DRAWN:** PM **CHECK:** HM **PROJ. NO:** P21052 **BID ON:** 6/10/15

SPRINGFIELD MILL RACE STORMWATER FACILITY, BOOTH KELLY TRAILHEAD & MILL RACE PATH

TRAILHEAD GRADING PLAN

THIS DRAWING IS FULL SIZE WHEN PLOTTED AT 22"x34".

Plotted by/CSARTHY, PATRICK on Friday, June 05, 2015 at 11:18:43 AM from file TH-2.dwg/d. tab.
File Name/P:\Work\1-Projects\12000\12300\12390\12390_Civil_Base_Design\TH-2 - PROPOSED SITE PLAN_GRADING 100%.DWG

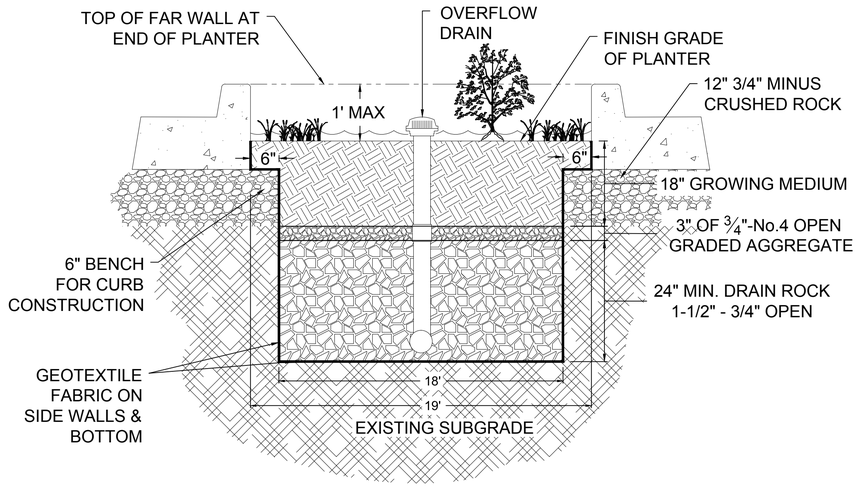

NOTE: SEE LANDSCAPING PLANS FOR RAIN GARDEN PLANTINGS

RAIN GARDEN WITH PARKING - CROSS SECTION (A / TH-3)

NTS

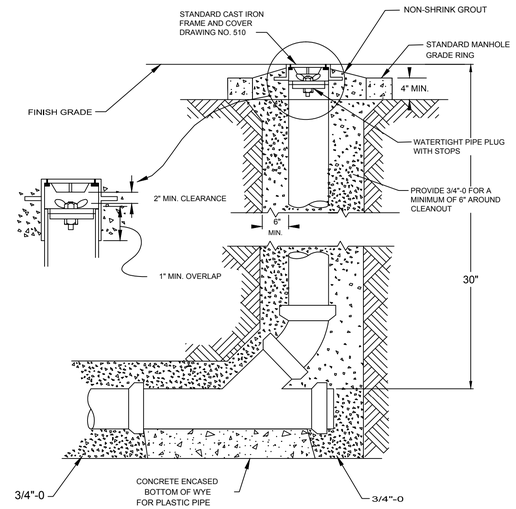

NOTE:
1. CONCRETE ENCASE ENTIRE WYE SECTION AND 45 BEND IF CONCRETE PIPE
2. STAND PIPE TO BE SAME SIZE AS MAINLINE UP TO AND INCLUDING 8" PIPE. MAINLINE GREATER THAN 8" SHALL HAVE A 8" STANDPIPE.

SANITARY SEWER CLEANOUT (C / TH-3)

NTS

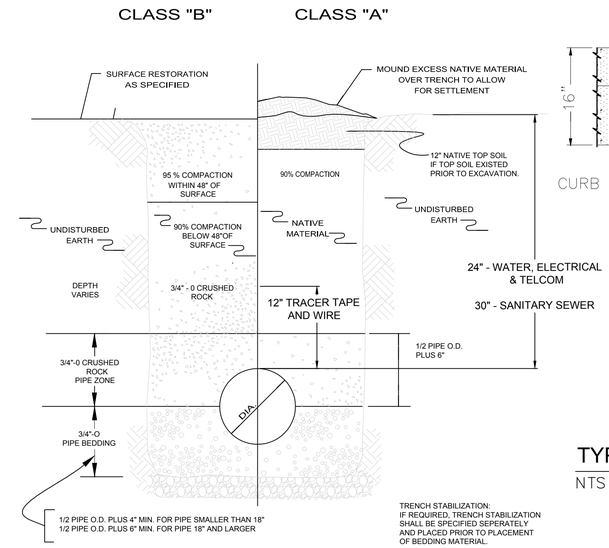

NOTE:
ALL COMPACTION REQUIREMENTS PER AASHTO T-99.

TRENCH BACKFILL (D / TH-3)

NTS

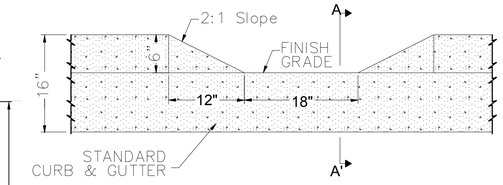

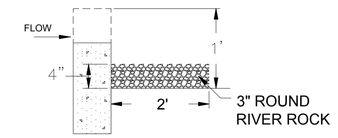

SECTION A - A'

TYPICAL CURB RAIN GARDEN INLET (E / TH-3)

NTS

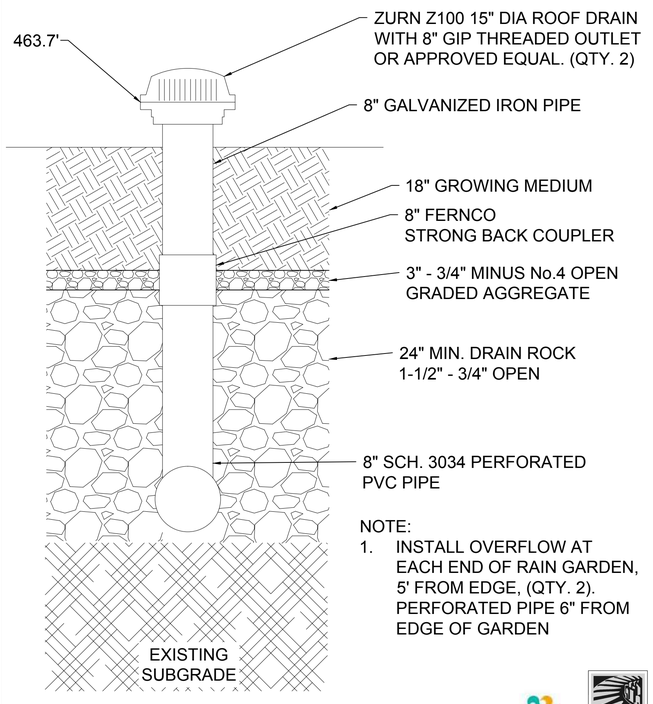

NOTE:
1. INSTALL OVERFLOW AT EACH END OF RAIN GARDEN, 5' FROM EDGE, (QTY. 2). PERFORATED PIPE 6" FROM EDGE OF GARDEN

OVERFLOW DETAIL (B / TH-3)

NTS

SUB WATER DEPARTMENT STANDARD CONSTRUCTION SPECIFICATION REFERENCES:

POLYETHYLENE (PE) PIPE AND SERVICE TUBING W-401.02.02 — ¾ INCH, 1 INCH, AND 2 INCH:

CORPORATION STOPS: W-401.02.03C1

POLYETHYLENE (PE): ¾ INCH AND LARGER ELECTROFUSION FITTINGS: W-401.02.04D

SERVICE SADDLES: W-401.02.05 W-401.02.08G — ADJUSTABLE VALVE BOXES:

VALVE BOX LIDS: W-401.02.08G1 — VALVE BOX RING: W-401.02.08G2

VALVE BOX INSERT: W-401.02.08G3 — FLANGED JOINTS: W-401.03.09A

SCREWED JOINTS: W-401.03.09E — VALVES AND VALVE TILES: W-401.03.10C

SERVICES: W-401.03.10H & W-401.05.03 W-401.02.08C — RESILIENT-SEATED GATE VALVES:

TRACER WIRE: W-401.02.02H & W-401.03.10I W-401.03.10B — METER BOXES: W-401.02.11 &

MATERIAL LIST

No.	QUAN.	PART No.	PART
1	1	516-2000	2" METER BOX
2	2	519-2000	2" x 3" BRASS NIPPLE
3	1	519-2004	2" BRASS GATE VALVE
4	1	546-0200	2" SQ. NUT GATE VALVE
5	LF	567-0200	2" POLY PIPE
6	1	574-0200	2" FUSION COUPLING (AS REQUIRED)
7	2	574-0210	2" FUSION ADAPTER
8	2	574-2090	2" 90° FUSION BEND
9	1	591-_ _ 20	_ _ x 2" SERVICE SADDLE
10	1	597-8000	8" VALVE TILE LID
11	1	597-8010	8" VALVE TILE INSERT
12	1	598-01 _ _	1 ½" METER
13	LF	NONSTOCK	LOCATE WIRE
14	2	NONSTOCK	1 ½" METER GASKET
15	4	NONSTOCK	⅝" x 2 ½" STAINLESS STEEL BOLTS
16	LF	NONSTOCK	8" VALVE TILE
17	2	NONSTOCK	METER FLANGE - 1½" MF x 2" FIP

NOTE:
THE REFERENCES PROVIDED IN THIS STANDARD ARE FOR INFORMATIONAL PURPOSES ONLY AND MAY NOT BE COMPLETE. IT IS THE CONTRACTORS RESPONSIBILITY TO ENSURE THAT ANY INSTALLATION PERFORMED MEETS THE REQUIREMENTS SET FORTH IN THE STANDARD CONSTRUCTION SPECIFICATIONS AND ANY OTHER APPLICABLE STANDARD.

NOTE:
DISK METER SHOWN FOR CLARITY. TURBINE AND OMNI METERS INSTALL WITH THE SAME MATERIAL LIST.

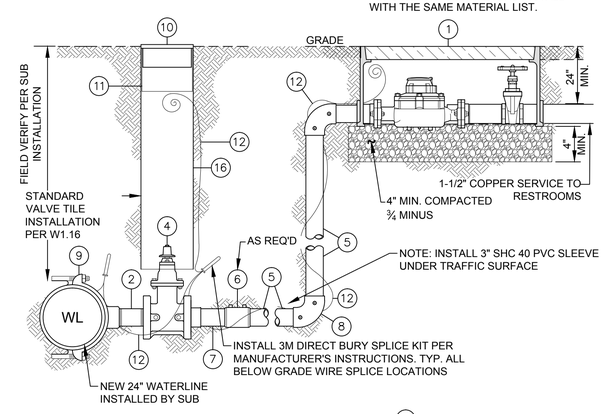

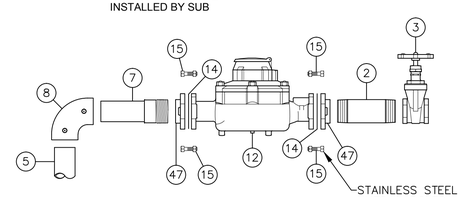

FITTING DETAIL

1 1/2" METER INSTALLATION (F / TH-3)

NTS

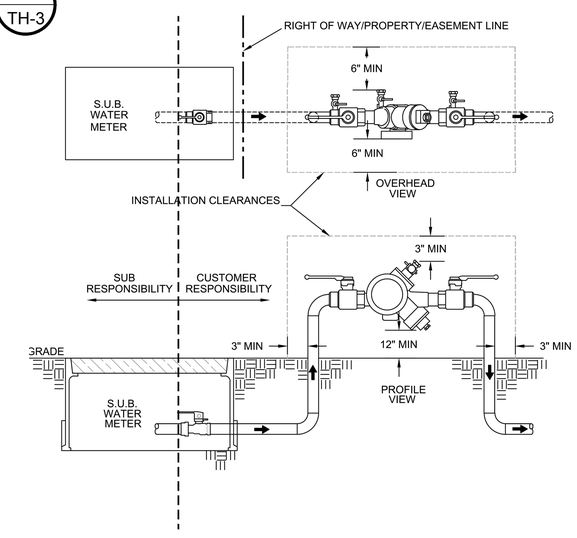

BACKFLOW PREVENTER (G / TH-3)

NTS

REGISTERED PROFESSIONAL ENGINEER 80570PE OREGON JUNE 02, 2010 DANIEL E. SCHALL 6/5/15 EXP: 6/30/16

100% DESIGN
FINAL DESIGN
ISSUE FOR BID & CONSTRUCTION

Revisions and Addendums			
Description	Date	No.	By
30% DESIGN	2/3/15	1	DS
REVISED 30% DEISGN	2/16/15	2	DS
60% DEISGN	4/3/15	3	DS
90% DESIGN	4/24/15	4	DS
DRAFT 100% DEISGN	5/15/15	5	DS
FINAL 100% DESIGN	6/5/15	6	DS

DESIGN: PM | DRAWN: DS | CHECK: HM | PROJ. NO: P21052 | BID ON: 6/10/15

THE CITY OF SPRINGFIELD DEVELOPMENT & PUBLIC WORKS
225 FIFTH STREET
SPRINGFIELD, OREGON 97477
VOICE: 541-726-3753
FAX: 541-726-2309
WWW.SPRINGFIELD-OR.GOV

SPRINGFIELD MILL RACE STORMWATER FACILITY, BOOTH KELLY TRAILHEAD & MILL RACE PATH

TRAILHEAD RAIN GARDEN & UTILITIES DETAILS

Plotted by/CSAPPY; PATRICK on Friday, June 05, 2015 at 11:42:43 AM from file TH-3 layout.tab
File Name/Project: L:\2005\12\2501\12250\12250\Civil_CADD_DESIGN\TH3 - BERGS\TH3-layout.dwg

* CONTROL JOINTS EVERY 15' FOR CURBS

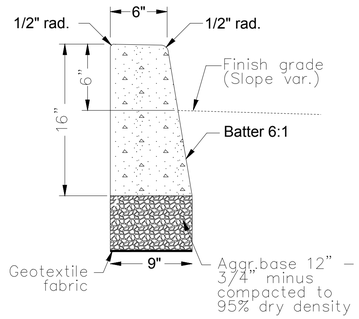

FULL DEPTH CURB (A / TH-4)

NTS

* CONTROL JOINTS EVERY 15' FOR CURBS

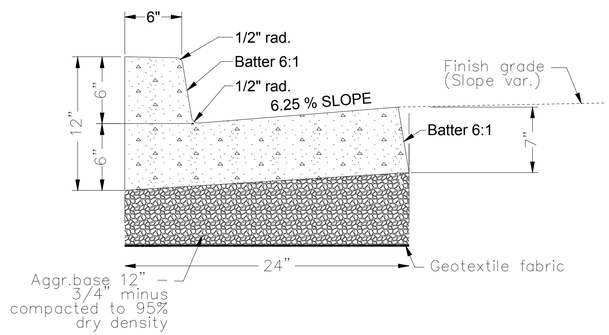

STANDARD CURB AND GUTTER (B / TH-4)

NTS

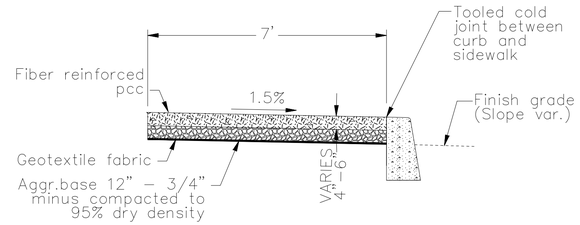

Note:
Reference TH–1 for locations of 4" & 6" concrete

TYPICAL CURB SIDEWALK/PLAZA CROSS SECTION (C / TH-4)

NTS

* CONTROL JOINTS EVERY 15' FOR CURBS

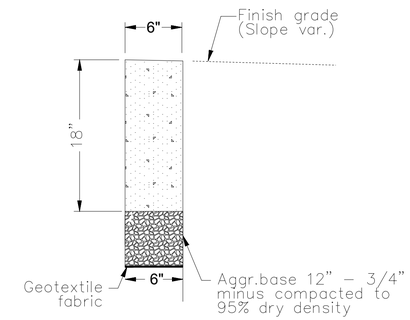

FLUSH CURB (D / TH-4)

NTS

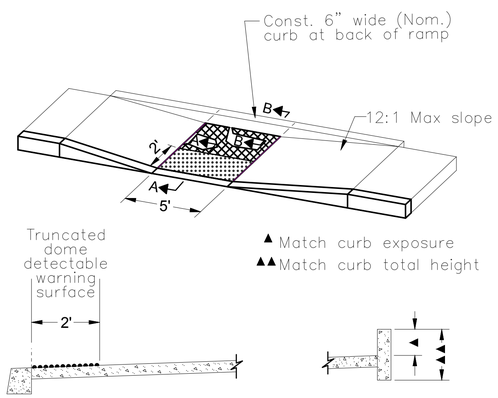

SECTION A-A

SECTION B-B

Turning space (Min. level area 48" x 48"). For the purposes of this application, a 2% maximum slope (For drainage) is considered level

Truncated dome detectable warning surface – Black Domes

ACCESSIBLE SIDEWALK RAMP (E / TH-4)

NTS

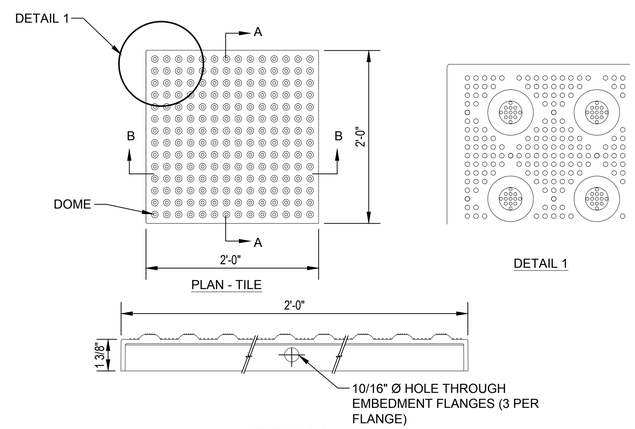

NOTES:
1. INSTALLATION TO BE COMPLETED IN ACCORDANCE WITH MANUFACTURER'S SPECIFICATIONS.
2. DO NOT SCALE DRAWINGS.
3. FOR CUSTOM SIZING CONTACT MANUFACTURER.
4. CONTRACTORS NOTE: FOR PRODUCT AND COMPANY INFORMATION VISIT www.CADdetails.com/info REFERENCE NUMBER 681-001B.
5. BLACK DOMES

ARMOR TILE CAST IN-PLACE TRUNCATED DOME DETECTABLE WARNING SURFACE (G / TH-4)

NTS

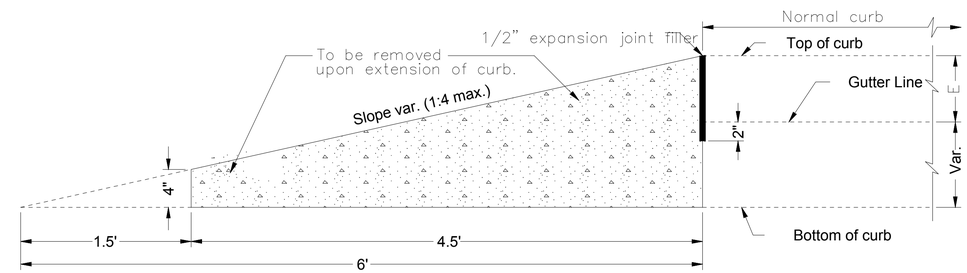

CURB ENDING DETAIL

CURB ENDING DETAIL (H / TH-4)

NTS

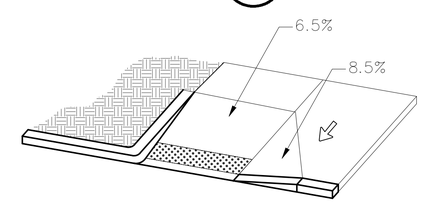

Truncated dome detectable warning surface – Black Domes

PLAZA RAMP DETAIL WITH SINGLE FLARE (I / TH-4)

NTS

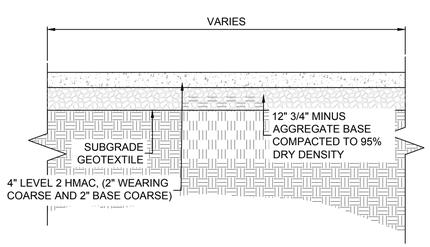

ASPHALT PARKING LOT & DRIVEWAY (F / TH-4)

NTS

CONCRETE NOTES

1. ALL CONCRETE FLAT WORK TO RECEIVE FIBER MESH REINFORCEMENT. FIBERMESH 300 OR APPROVED EQUAL. CONTRACTOR SHALL SUBMIT MIX DESIGN FOR APPROVAL TO ENGINEER.
2. ALL CONCRETE FOR TRAILHEAD - 3,300 PSI

REGISTERED PROFESSIONAL ENGINEER 80570PE OREGON JUNE 02, 2010 DANIEL E. SCHALL 6/5/15 EXP: 6/30/16

100% DESIGN
FINAL DESIGN
ISSUE FOR BID & CONSTRUCTION

willamalane Park and Recreation District

LANDSCAPE ARCHITECTS SCHIRMER SATRE GROUP

Revisions and Addendums			
Description	Date	No.	By
30% DESIGN	2/3/15	1	DS
REVISED 30% DESIGN	2/16/15	2	DS
60% DESIGN	4/3/15	3	DS
90% DESIGN	4/24/15	4	DS
DRAFT 100% DESIGN	5/15/15	5	DS
FINAL 100% DESIGN	6/5/15	6	DS

amec foster wheeler

SPRINGFIELD OREGON

THE CITY OF SPRINGFIELD
DEVELOPMENT & PUBLIC WORKS
225 FIFTH STREET
SPRINGFIELD, OREGON 97477
VOICE: 541–726–3753
FAX: 541–726–2309
WWW.SPRINGFIELD–OR.GOV

DESIGN: PM | DRAWN: DS | CHECK: HM | PROJ. NO: P21052 | BID ON: 6/10/15

SPRINGFIELD MILL RACE STORMWATER FACILITY, BOOTH KELLY TRAILHEAD & MILL RACE PATH

TRAILHEAD PARKING LOT & SIDEWALK DETAILS

Plotted by:MCCARTHY, PATRICK on Friday, June 05, 2015 at 11:42:52 AM from the Tn-4.dgn(s) lab
File Name:Users\12-0203\12-0203\12-0203\12-0203\Dwgs\Lab\TN-4_SIDEWALK.dgn

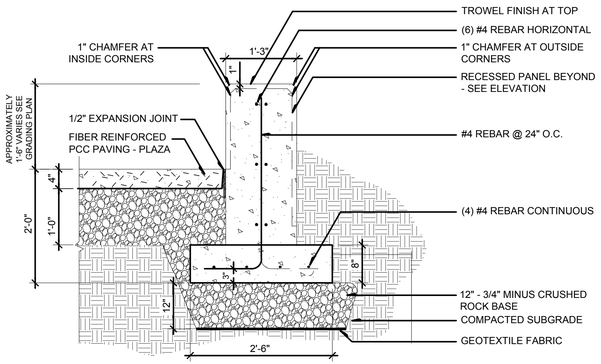

SHORT WALL CROSS SECTION (A / TH-5)

NTS

NOTES:
1. START PATTERN AT ARCH & STAMPED IN-LAY AND WORK TO ENDS.

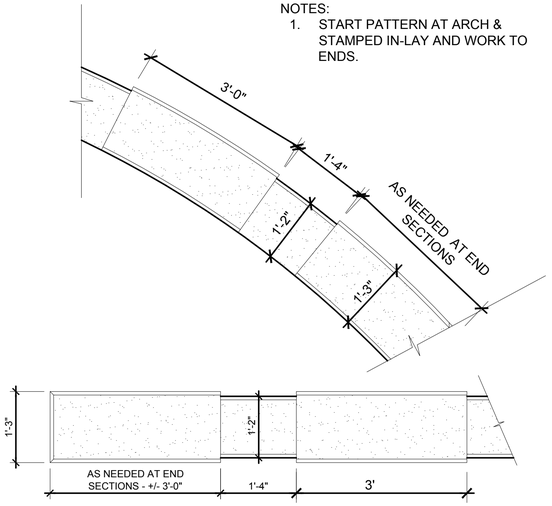

SHORT WALL PATTERNING (B / TH-5)

NTS

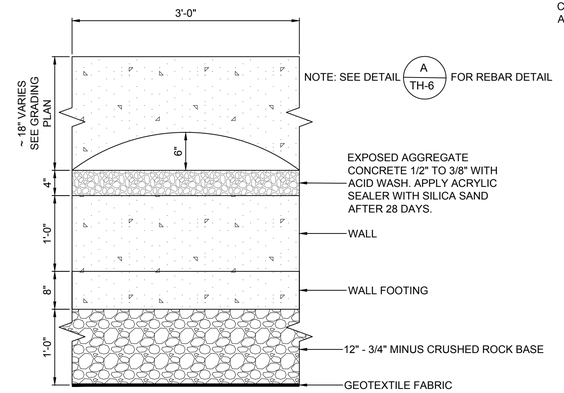

ARCH WALL AT STAMPED CONCRETE INLAY (C / TH-5)

NTS

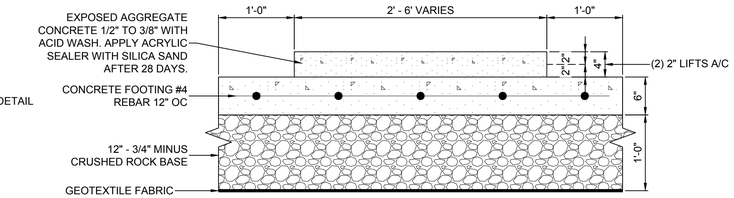

CONCRETE FEATURE DETAIL AT ASPHALT PAVING (D / TH-5)

NTS

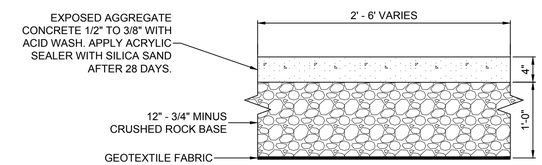

CONCRETE FEATURE DETAIL AT CONCRETE PLAZA (E / TH-5)

NTS

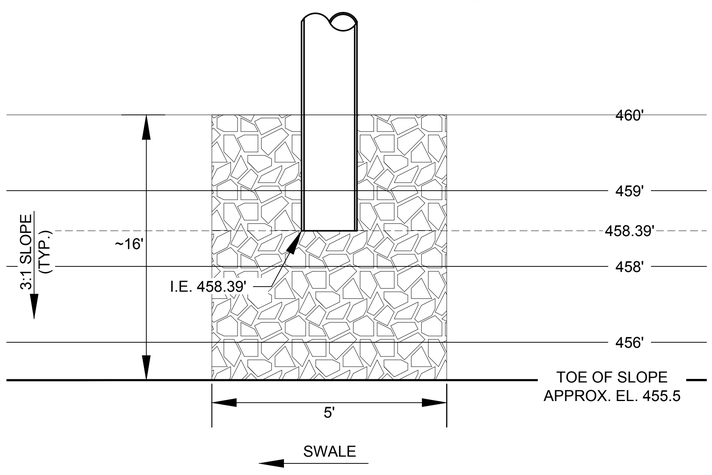

RAIN GARDEN OUTFALL PLAN VIEW

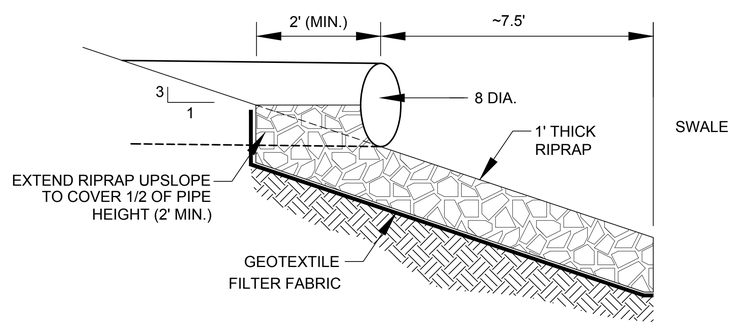

RAIN GARDEN OUTFALL SECTION VIEW

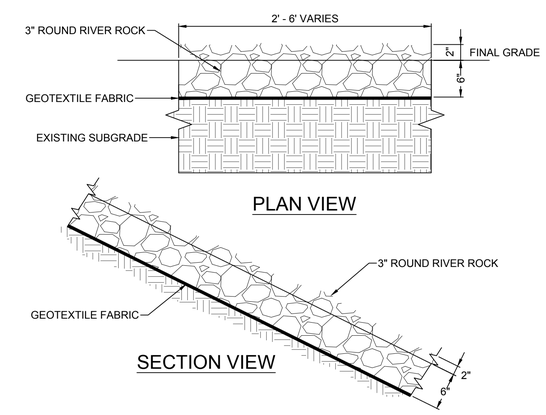

COBBLE ROCK FEATURE DETAIL AT SWALE (F / TH-5)

NTS

OUTFALL PROTECTION NOTES

1. RIP RAP AT THE RAIN GARDEN OUTFALL SHALL BE CLASS 50.
2. RIP RAP AT THE OUTFALL OF THE BYPASS PIPE SHALL BE CLASS 100.
3. RIP RAP SHALL BE QUARRY STONE. COBBLES ARE NOT ACCEPTABLE. ROCKS SHALL BE PLACED TO PROVIDE A MINIMUM OF VOIDS. SURFACE ROCKS SHALL PROTRUDE AT LEAST 1/2 THEIR VERTICAL DIMENSION.
4. RAP RAP SHALL BE PLACED OVER GEOTEXTILE FILTER BLANKET .

RAIN GARDEN OUTFALL RIPRAP DETAIL (F / TH-5)

NTS

100% DESIGN
FINAL DESIGN
ISSUE FOR BID & CONSTRUCTION

REGISTERED PROFESSIONAL ENGINEER 80570PE OREGON JUNE 02, 2010 DANIEL E. SCHALL 6/5/15 EXP: 6/30/16

willamalane Park and Recreation District

LANDSCAPE ARCHITECTS SCHIRMER SATRE GROUP

Revisions and Addendums			
Description	Date	No.	By
30% DESIGN	2/3/15	1	DS
REVISED 30% DESIGN	2/16/15	2	DS
60% DESIGN	4/3/15	3	DS
90% DESIGN	4/24/15	4	DS
DRAFT 100% DESIGN	5/15/15	5	DS
FINAL 100% DESIGN	6/5/15	6	DS

amec foster wheeler

SPRINGFIELD OREGON

THE CITY OF SPRINGFIELD
DEVELOPMENT & PUBLIC WORKS
225 FIFTH STREET
SPRINGFIELD, OREGON 97477
VOICE: 541-726-3753
FAX: 541-726-2309
WWW.SPRINGFIELD-OR.GOV

DESIGN: PM | DRAWN: DS | CHECK: HM | PROJ. NO: P21052 | BID ON: 6/10/15

SPRINGFIELD MILL RACE STORMWATER FACILITY, BOOTH KELLY TRAILHEAD & MILL RACE PATH

TRAILHEAD SHORT WALL, CONCRETE FEATURE, & RAIN GARDEN OUTFALL DETAILS

SHEET TH-5

34 OF 47

Plotted by:MCARTHY, PATRICK on Friday, June 05, 2015 at 11:43:00 AM from file TH-5.dwg cad file: Hoover-Parkway\12000\12200\12250\12250\LANDS_LDSE\DESIGN\TH5 - BOSS\TH5-1000.dwg

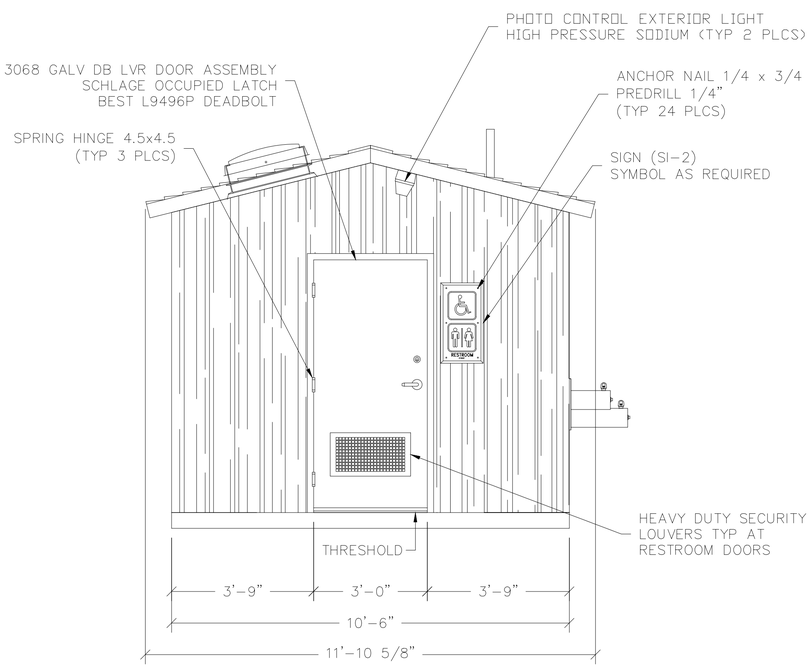

LEFT END ELEVATION

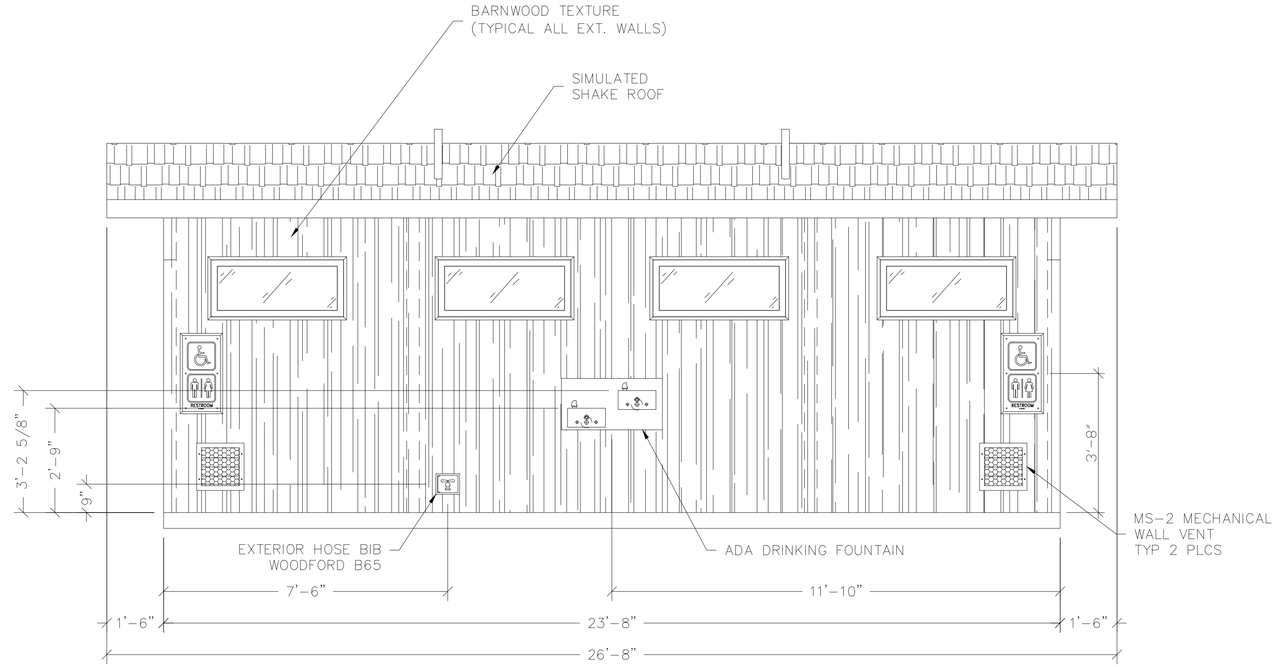

FRONT ELEVATION

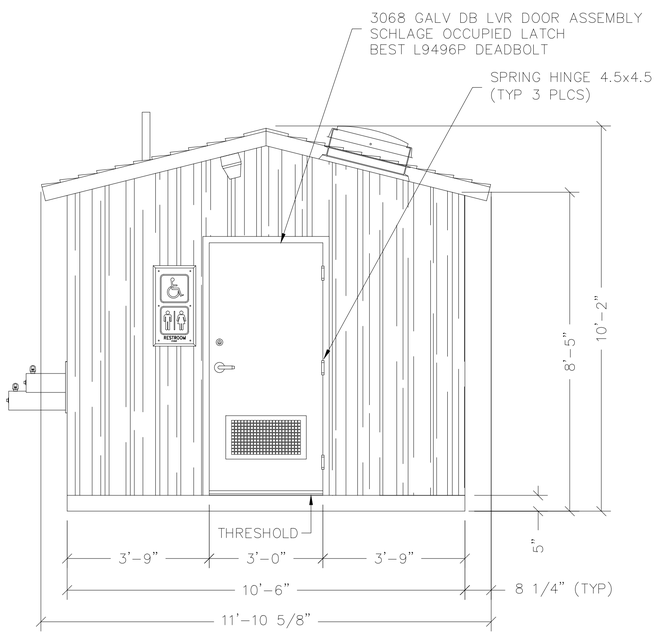

RIGHT END ELEVATION

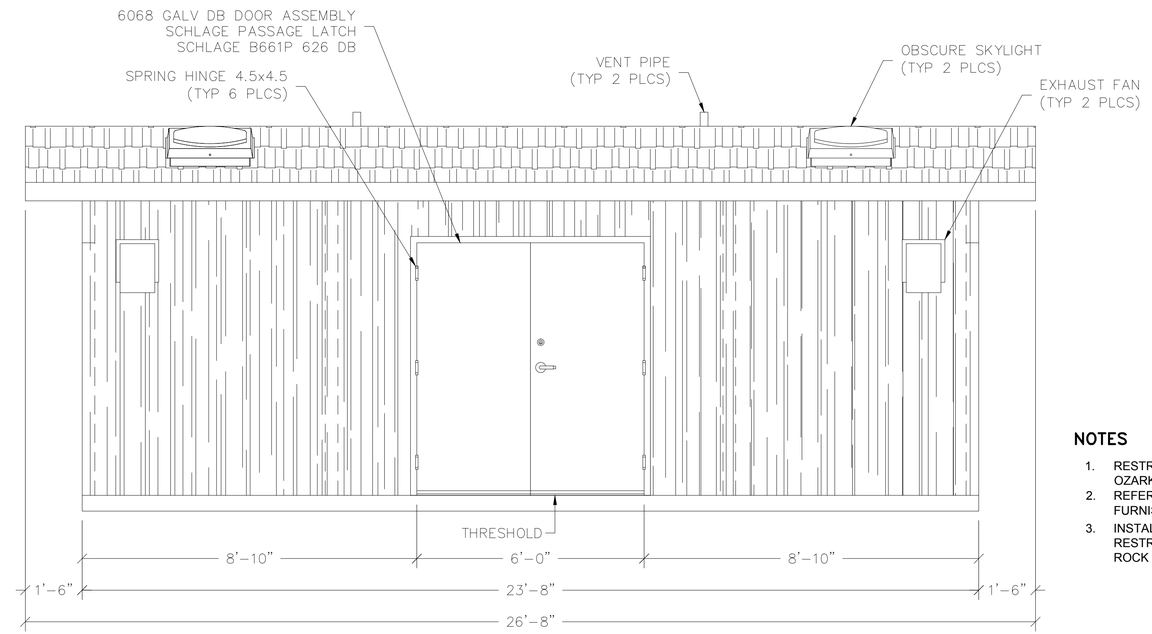

BACK ELEVATION

3808 N. Sullivan Bldg. #7 Spokane, WA 99216

Precast Products

901 N. Highway 77 Hillsboro, TX 76645

NOTES

1. RESTROOM DESIGN BASED ON A MODIFIED VERSION OF THE OZARK II MODEL BY CXT INC.
2. REFERENCE SPECIFICATION SECTION 01095 - SITE FURNISHINGS FOR FINISHES & OPTIONS
3. INSTALL 12", $\frac{3}{4}$" MINUS CRUSHED ROCK BASE BENEATH RESTROOM. INSTALL GEOTEXTILE FABRIC BETWEEN CRUSHED ROCK & SUBGRADE MATERIAL.

100% DESIGN
FINAL DESIGN
ISSUE FOR BID & CONSTRUCTION

REGISTERED PROFESSIONAL ENGINEER 80570PE OREGON JUNE 02, 2010 DANIEL E. SCHALL 6/5/15
EXP. 6/30/16

willamalane Park and Recreation District

LANDSCAPE ARCHITECTS SCHIRMER SATRE GROUP

Revisions and Addendums			
Description	Date	No.	By
30% DESIGN	2/3/15	1	DS
REVISED 30% DESIGN	2/16/15	2	DS
60% DESIGN	4/3/15	3	DS
90% DESIGN	4/24/15	4	DS
DRAT 100% DESIGN	5/15/15	5	DS
FINAL 100% DESIGN	6/5/15	6	DS

amec foster wheeler

SPRINGFIELD OREGON

THE CITY OF SPRINGFIELD
DEVELOPMENT & PUBLIC WORKS
225 FIFTH STREET
SPRINGFIELD, OREGON 97477
VOICE: 541-726-3753
FAX: 541-726-2309
WWW.SPRINGFIELD-OR.GOV

DESIGN: DS | **DRAWN:** PM | **CHECK:** HM | **PROJ. NO:** P21052 | **BID ON:** 6/10/15

SPRINGFIELD MILL RACE STORMWATER FACILITY, BOOTH KELLY TRAILHEAD & MILL RACE PATH

TRAILHEAD RESTROOM DETAILS - SECTION VIEW

Plotted by:MCCARTHY, PATRICK on: Friday, June 05, 2015 at 11:43:13 AM from the Th-6 layout tab
File Name:Project L:\2005\12705\12700\12760\1200E-BROWN\DWG - SPREAD SHEETS\6980

ALL PIPING INDICATED ON THIS SHEET IS NOT BY CXT

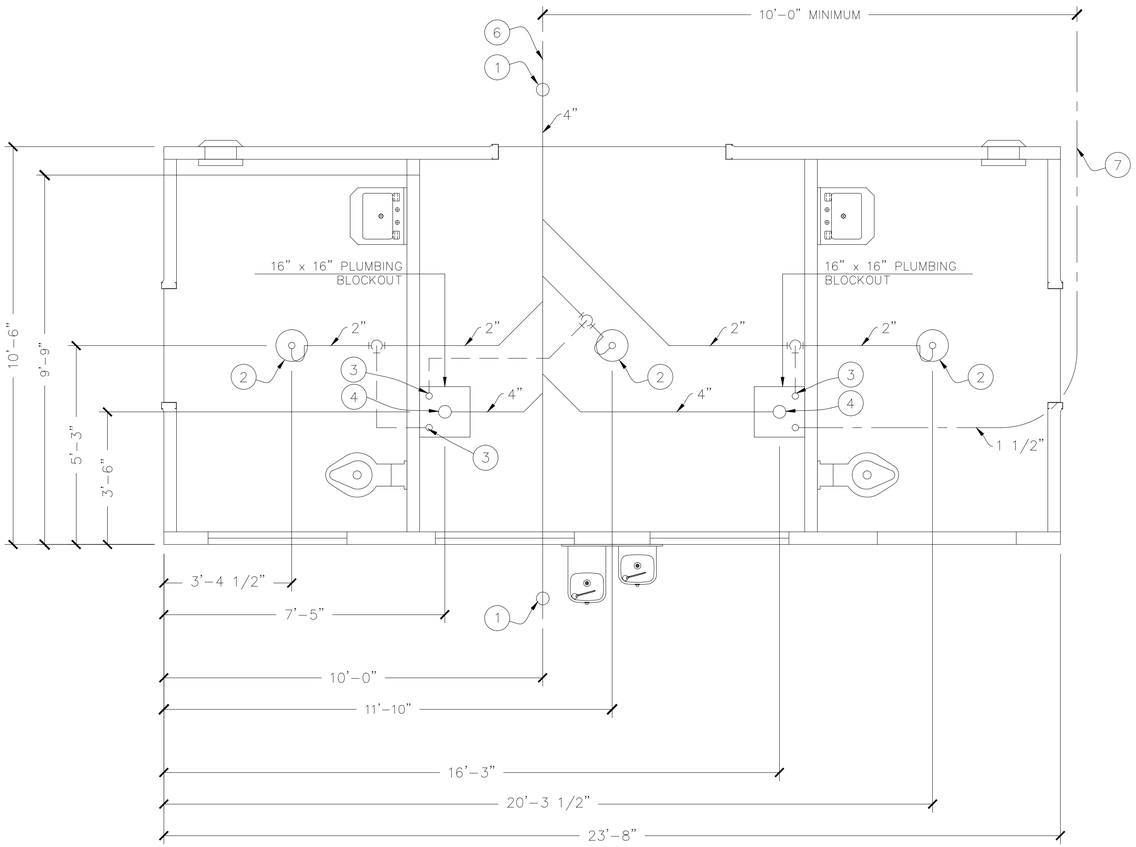

FLOOR DRAIN BLOCKOUTS & BELOW FLOOR PIPING

BELOW FLOOR PIPING – KEY NOTES

1. 4" CLEAN OUT TO GRADE.
2. 2" FLOOR DRAIN. FIELD INSTALLED TRAP PRIMER SYSTEM IF REQUIRED BY AUTHORITY HAVING JURISDICTION. (10" DIA BLOCKOUT)
3. 2" VENT PIPES EXTENDED 12" ABOVE FINISHED FLOOR LEVEL, PROVIDE TEST PLUG. (16"x16" BLOCKOUT)
4. 4" WASTE PIPE EXTENDED 12" ABOVE FINISHED FLOOR LEVEL, PROVIDE TEST PLUG. (16"x16" BLOCKOUT)
5. 1 1/2" TYPE K ANNEALED "SOFT" COPPER WATER SERVICE EXTENDED 12" ABOVE FINISHED FLOOR LEVEL, PROVIDE CAP AT END. (16"x16" BLOCKOUT)
6. 30" MIN. BURY, PROVIDE TRACER TAPE.
7. MIN. BURY PER LOCAL REQUIREMENTS TO PROTECT FROM FREEZING AND DAMAGE.
8. CUSTOMER TO REQUEST BLOCKOUTS FOR PLUMBING AND ELECTRICAL
9. INCLUDE FREEZE PROOF VALVES FOR DRINKING FOUNTAIN
10. INCLUDE HEATER IN PLUMBING BLOCKOUT

PIPING LEGEND

- - - 1 1/2" TYPE "K" ANNEALED "SOFT" COPPER WATER SERVICE
——— BELOW FLOOR WASTE PIPING SCH 40 ABS TYPE DWV
— — — BELOW FLOOR VENT PIPING SCH 40 ABS TYPE DWV

3808 N. Sullivan Bldg. #7 Spokane, WA 99216
CXT Precast Products
901 N. Highway 77 Hillsboro, TX 76645

NOTES

1. RESTROOM DESIGN BASED ON A MODIFIED VERSION OF THE OZARK II MODEL BY CXT INC.
2. REFERENCE SPECIFICATION SECTION 01095 - SITE FURNISHINGS FOR FINISHES & OPTIONS
3. INSTALL 12", $\frac{3}{4}$" MINUS CRUSHED ROCK BASE BENEATH RESTROOM. INSTALL GEOTEXTILE FABRIC BETWEEN CRUSHED ROCK & SUBGRADE MATERIAL.

100% DESIGN
FINAL DESIGN
ISSUE FOR BID & CONSTRUCTION

REGISTERED PROFESSIONAL ENGINEER 80570PE OREGON JUNE 02, 2010 DANIEL E. SCHALL 6/5/15
EXP: 6/30/16

willamalane Park and Recreation District

LANDSCAPE ARCHITECTS SCHIRMER SATRE GROUP

Revisions and Addendums			
Description	Date	No.	By
30% DESIGN	2/3/15	1	DS
REVISED 30% DESIGN	2/16/15	2	DS
60% DESIGN	4/3/15	3	DS
90% DESIGN	4/24/15	4	DS
DRAFT 100% DESIGN	5/15/15	5	DS
FINAL 100% DESIGN	6/5/15	6	DS

amec foster wheeler

DESIGN: DS | DRAWN: PM | CHECK: HM | PROJ. NO: P21052 | BID ON: 6/10/15

SPRINGFIELD OREGON

THE CITY OF SPRINGFIELD
DEVELOPMENT & PUBLIC WORKS
225 FIFTH STREET
SPRINGFIELD, OREGON 97477
VOICE: 541-726-3753
FAX: 541-726-2309
WWW.SPRINGFIELD-OR.GOV

SPRINGFIELD MILL RACE STORMWATER FACILITY, BOOTH KELLY TRAILHEAD & MILL RACE PATH

TRAILHEAD RESTROOM UTILITY DETAILS - PLAN VIEW

SHEET TH-7

Plotted by:MCCARTHY, PATRICK on Friday, June 05, 2015 at 11:43:07 AM from the Th-7 layout tab
File: Name=Drawn=\\S2000\12700\12790\1\Mill\L-0002_SPRING.TXS - SERIES: 1-0000.DWG

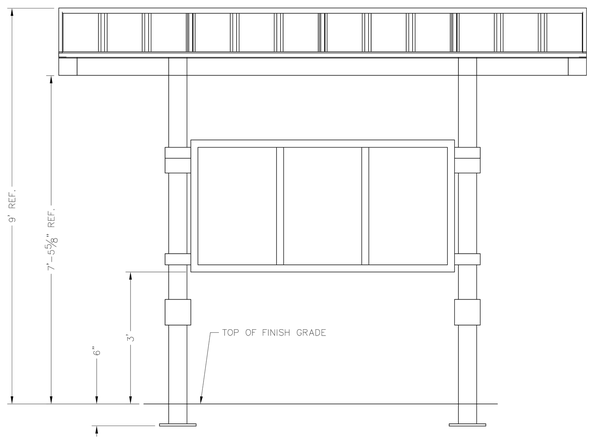

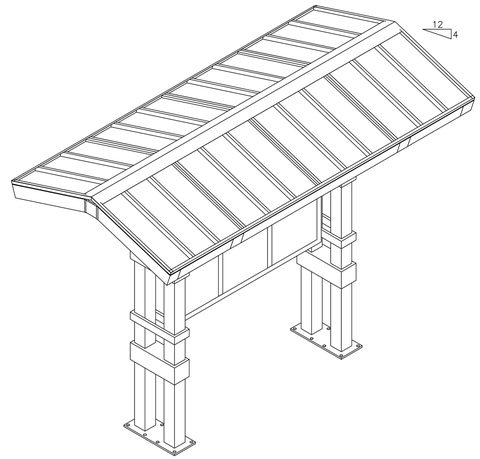

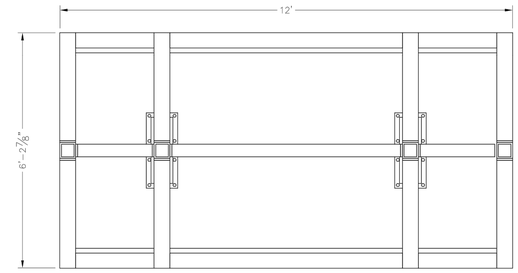

PLAN

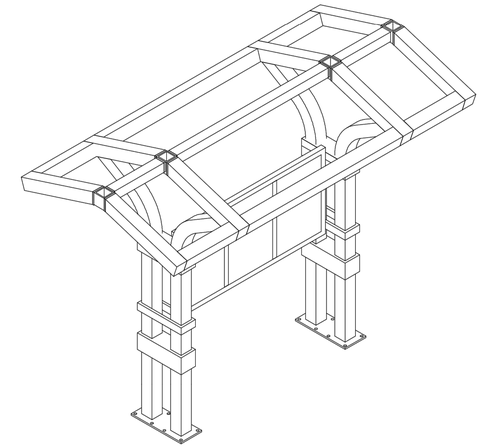

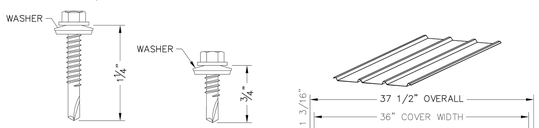

1 1/4" PAINTED SCREW 3/4" PAINTED SCREW

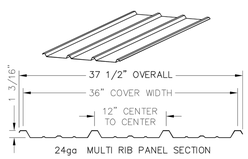

24ga MULTI RIB PANEL SECTION

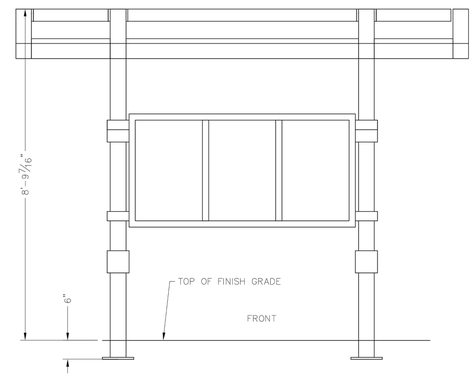

FRONT

ALL STRUCTURAL COMPONENTS WILL BE:
TUBE: ASTM A500 GRADE B
PLATE: ASTM A36
BOLTS: ASTM A325
NUTS: ASTM A563
WELDING: GMAW

NOTE:
COLUMN SIZE: HSS 5x5x3/16

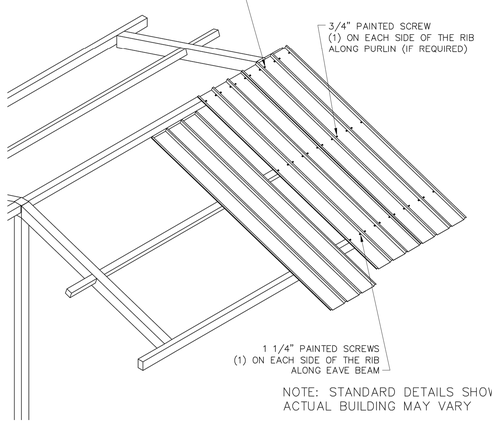

NOTE: STANDARD DETAILS SHOWN
ACTUAL BUILDING MAY VARY

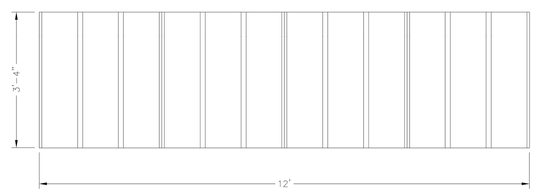

ROOF LAYOUT

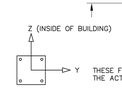

THESE FOUNDATION LOADS ARE FOR ESTIMATING PURPOSE ONLY.
THE ACTUAL LOADS WILL BE DETERMINED IN THE FINAL ENGINEERING

CL1

LOADS TO FOUNDATION (KIPS, IN-KIPS)	FOUNDATION LOADS				
LOAD COMBINATION	AXIAL (Fx)	SHEAR (Fy)	SHEAR (Fz)	MOMENT (My)	MOMENT (Mz)
DL	0.43	−0.02	0.00	0.00	−0.65
SL	2.30	−0.16	0.00	0.00	−6.18
W−UPLIFT	−0.91	0.32	0.00	0.00	19.97
W−FY	0.91	−0.32	0.00	0.00	−19.97
W−FZ	0.41	−0.03	0.19	−10.85	−1.18
E−FY	0.42	−0.55	0.00	0.00	−37.01
E−Z	0.00	0.00	−0.55	62.15	0.00

NOTES:
− TABLE SHOWS UNFACTORED SERVICE LOADS
− A FOUNDATION DESIGN HAS NOT BEEN PERFORMED BY ICON SHELTER SYSTEMS INC.
− A LICENSED ENGINEER FAMILIAR WITH SOIL CONDITIONS AT CONSTRUCTION SITE MUST PERFORM A FOUNDATION DESIGN.
− THE STRUCTURE HAS BEEN ENGINEERED AS AN OPEN STRUCTURE.
− CONSULT ICON SHELTER SYSTEMS INC. IF THE STRUCTURE IS TO BE ENCLOSED.
− COORDINATES ARE LOCAL TO THE COLUMN

DEFINITIONS:
DL = SERVICE LEVEL DEAD LOAD REACTION WITH THE GREATEST AXIAL LOAD
SL = SERVICE LEVEL SNOW LOAD REACTION WITH THE GREATEST AXIAL LOAD
W−UL = SERVICE LEVEL WIND LOAD REACTION WITH THE GREATEST UPLIFT LOAD
W−Y = SERVICE LEVEL WIND LOAD REACTION WITH THE GREATEST MAGNITUDE OF SHEAR IN THE LOCAL Y DIRECTION
W−Z = SERVICE LEVEL WIND LOAD REACTION WITH THE GREATEST SHEAR VALUE ACTING IN THE SAME DIRECTION AS THE DL SHEAR LOAD
E−Y = SERVICE LEVEL SEISMIC LOAD REACTION WITH THE GREATEST MAGNITUDE OF SHEAR IN THE LOCAL Y DIRECTION
E−Z = SERVICE LEVEL SEISMIC LOAD REACTION WITH THE GREATEST MAGNITUDE OF SHEAR IN THE LOCAL Z DIRECTION

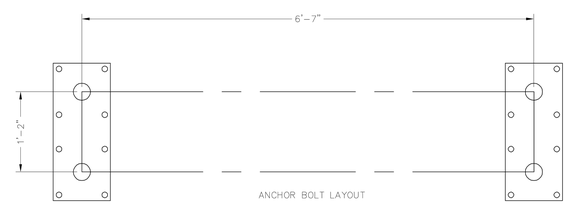

ANCHOR BOLT LAYOUT

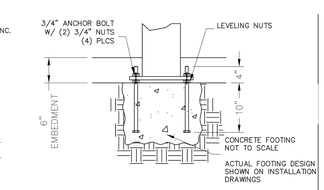

PRELIMINARY DRAWINGS SHOWN AS 6" BURIED
STANDARD BASE CONNECTION
COLUMN TYPE: A (6" BURIED)

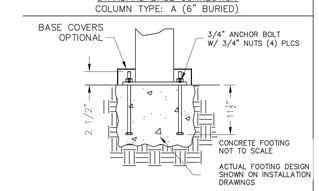

OPTIONAL BASE CONNECTION
COLUMN TYPE: B (SURFACE MOUNT W/ COVERS)

NOTES:
1. KIOSK DETAILS PROVIDED BY ICON SHELTER SYSTEMS; (616) 748-0985.
2. BUILDING TYPE: SG6X12M-P4
3. THESE DRAWINGS ARE PRELIMINARY DRAWINGS PROVIDED BY ICON. CONTRACTOR SHALL PROVIDE FINAL SHOP DRAWINGS TO ENGINEER FOR REVIEW & APPROVAL PRIOR TO INSTALLATION.

REGISTERED PROFESSIONAL ENGINEER 80570PE OREGON JUNE 02, 2010 DANIEL E. SCHALL
6/5/15
EXP: 6/30/16

100% DESIGN
FINAL DESIGN
ISSUE FOR BID & CONSTRUCTION

willamalane Park and Recreation District
LANDSCAPE ARCHITECTS SCHIRMER SATRE GROSS INC.

Revisions and Addendums			
Description	Date	No.	By
30% DESIGN	2/3/15	1	DS
REVISED 30% DESIGN	2/16/15	2	DS
60% DEISGN	4/3/15	3	DS
90% DESIGN	4/24/15	4	DS
DRAFT 100% DESIGN	5/15/15	5	DS
FINAL 100% DESIGN	6/5/15	6	DS

amec foster wheeler

SPRINGFIELD OREGON
THE CITY OF SPRINGFIELD
DEVELOPMENT & PUBLIC WORKS
225 FIFTH STREET
SPRINGFIELD, OREGON 97477
VOICE: 541−726−3753
FAX: 541−726−2309
WWW.SPRINGFIELD−OR.GOV

DESIGN: PM | DRAWN: DS | CHECK: HM | PROJ. NO: P21052 | BID ON: 6/10/15

SPRINGFIELD MILL RACE STORMWATER FACILITY, BOOTH KELLY TRAILHEAD & MILL RACE PATH

TRAILHEAD KIOSK DETAILS

SHEET TH−8

Plotted by:MCCARTHY, PATRICK on Friday, June 05, 2015 at 11:42:21 AM from the Th-8 layout tab
File Name:P:\Projects\1520001\1520001\1520001.\0000-SPGRN\TH-8 — DETAILS.DWG

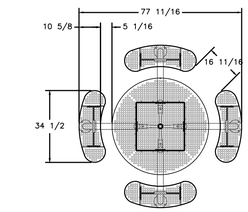

WABASH VALLEY, SPYDER SERIES 46" ROUND TABLE (SY110P) WITH 4 LEGS, SURFACE MOUNT, PERFORATED PATTERN, ALL BLACK

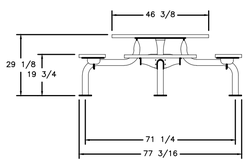

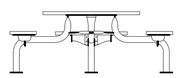

LEG REMOVED FOR CLARITY

NOTES:
1. UNLESS OTHERWISE SPECIFIED, ALL DIMENSIONS ARE IN INCHES, PER ASME Y14.5M-1994 AND AFTER COATING.

STANDARD PICNIC TABLE — A / TH-9

NTS

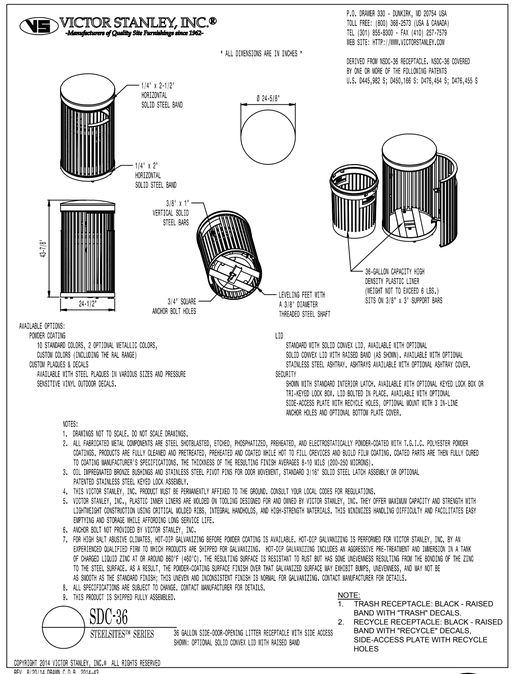

TRASH & RECYCLE RECEPTACLE — C / TH-9

NTS

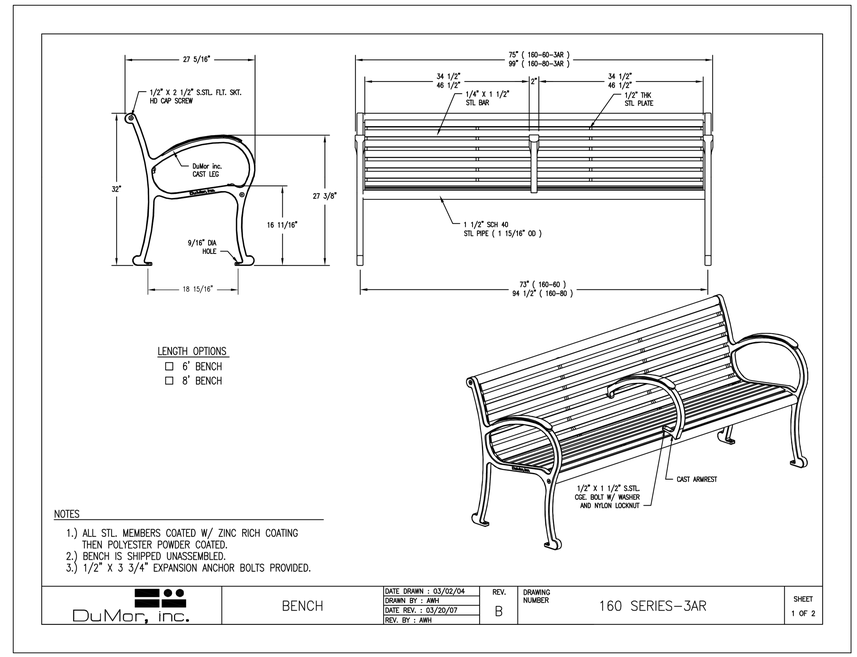

STEEL BENCH — D / TH-9

NTS

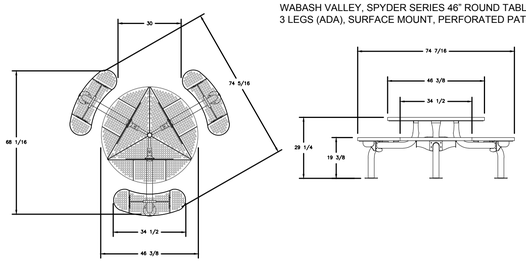

WABASH VALLEY, SPYDER SERIES 46" ROUND TABLE (SY111P) WITH 3 LEGS (ADA), SURFACE MOUNT, PERFORATED PATTERN, ALL BLACK

NOTES:
1. UNLESS OTHERWISE SPECIFIED, ALL DIMENSIONS ARE IN INCHES AND PER ASME Y14.5M-1994.
2. ALL DIMENSIONS AFTER TO PLASTISOL COATING.
3. DO NOT SCALE DRAWING.

ADA PICNIC TABLE — B / TH-9

NTS

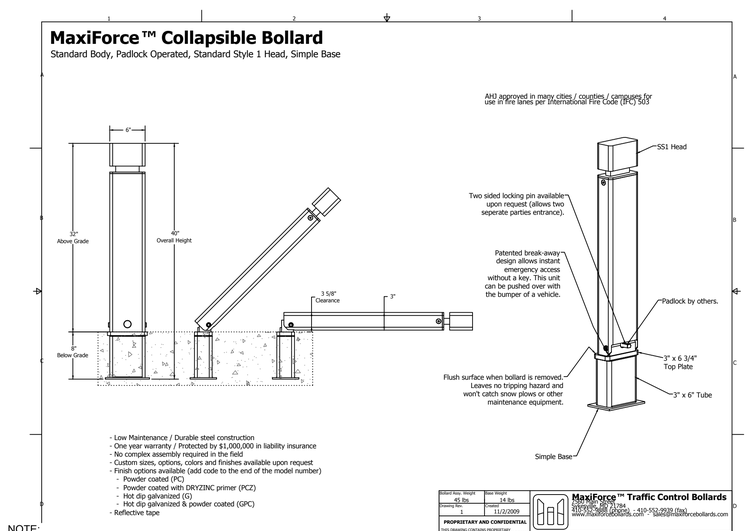

BOLLARD — E / TH-9

NTS

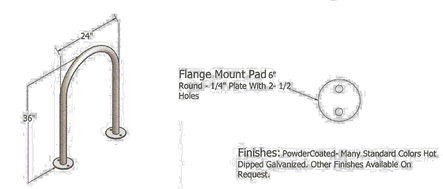

NOTE:
1. COLOR: BLACK
2. NO COMPANY DECAL

RPB HOOP STYLE BIKE RACK — F / TH-9

NTS

GENERAL NOTES:

1. ALL SITE FURNISHINGS TO BE BLACK

REGISTERED PROFESSIONAL ENGINEER 80570PE OREGON JUNE 02, 2010 DANIEL E. SCHALL 6/5/15 EXP. 6/30/16

100% DESIGN
FINAL DESIGN
ISSUE FOR BID & CONSTRUCTION

willamalane Park and Recreation District

LANDSCAPE ARCHITECTS SCHIRMER SATRE GROUP

Revisions and Addendums			
Description	Date	No.	By
30% DEDSIGN	2/3/15	1	DS
REVISED 30% DEISGN	2/16/15	2	DS
60% DESIGN	4/3/15	3	DS
90% DESIGN	4/24/15	4	DS
DRAFT 100% DESIGN	5/15/15	5	DS
FINAL 100% DESIGN	6/5/15	6	DS

amec foster wheeler

SPRINGFIELD OREGON

THE CITY OF SPRINGFIELD
DEVELOPMENT & PUBLIC WORKS
225 FIFTH STREET
SPRINGFIELD, OREGON 97477
VOICE: 541-726-3753
FAX: 541-726-2309
WWW.SPRINGFIELD-OR.GOV

DESIGN: PM | DRAWN: DS | CHECK: HM | PROJ. NO: P21052 | BID ON: 6/10/15

SPRINGFIELD MILL RACE STORMWATER FACILITY, BOOTH KELLY TRAILHEAD & MILL RACE PATH

TRAILHEAD PLAZA AMENITIES & BOLLARD DETAILS

Printed by MCGARVY, PATRICK on Friday, June 05, 2015, at 11:43:27 AM from the Th-9 layout tab
File "Home/Projects/1120201/120201127951/120201127951_100%_DESIGN/100%_DESIGN.DWG"

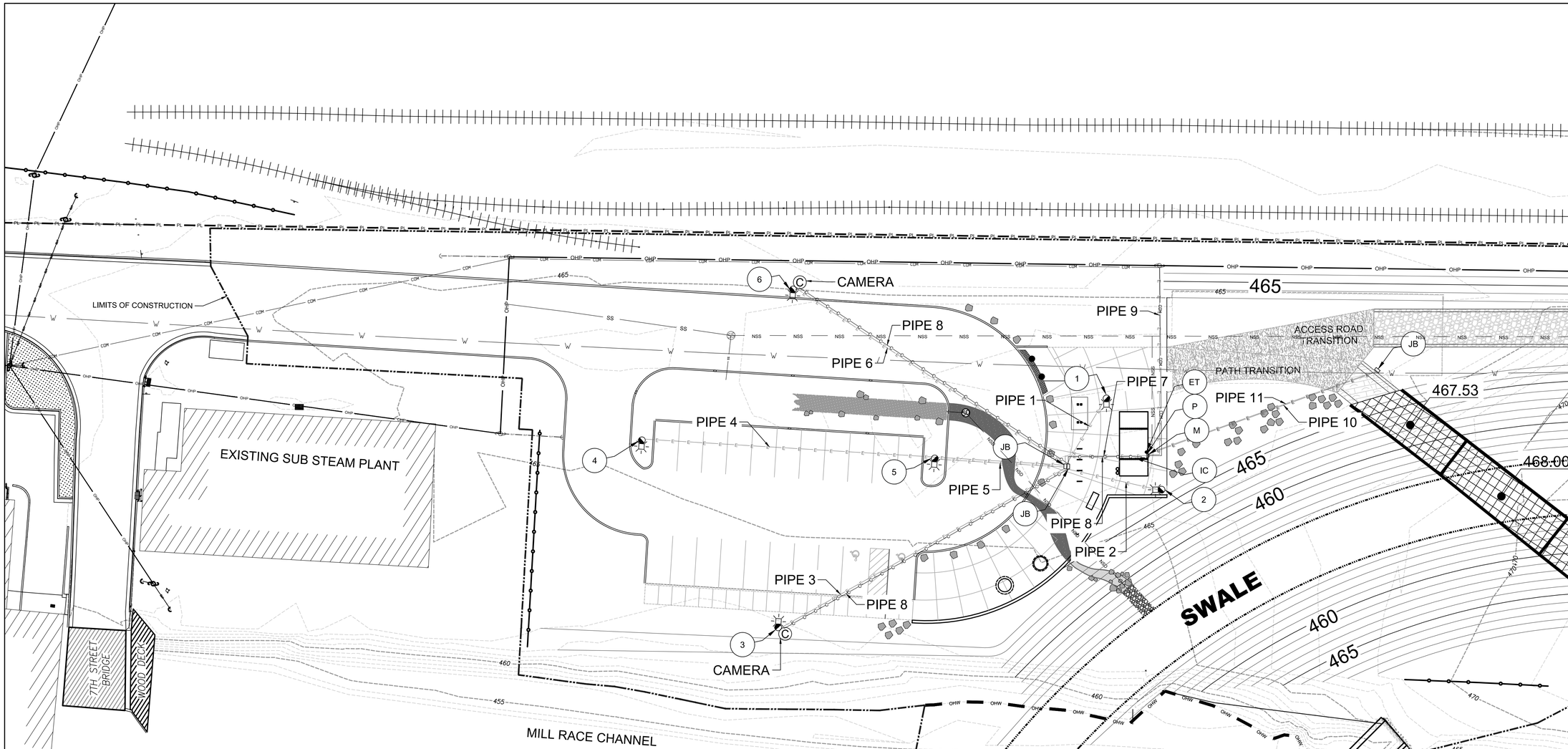

LEGEND

- STORM SEWER MANHOLE
- SANITARY SEWER MANHOLE
- RAIN GARDEN INLET
- AREA DRAIN
- UTILITY POLE
- GUY-WIRE ANCHOR
- CONSTRUCTION NOTES
- LIGHT POLE
- RAILROAD TRACKS
- FENCE
- OHP — OVERHEAD POWER LINE
- CDM — OVERHEAD COMMUNICATION LINE
- PROPOSED ELECTRIC CONDUIT
- PROPOSED CAMERA CONDUIT
- GUY-WIRE
- SD — EXISTING STORM SEWER
- NSD — NEW STORM SEWER
- SS — EXISTING SANITARY SEWER
- NSS — NEW SANITARY SEWER
- EXISTING MAJOR CONTOUR
- EXISTING MINOR CONTOUR
- PROPOSED MAJOR CONTOUR
- PROPOSED MINOR CONTOUR
- W — PROPOSED FUTURE SUB WATERLINE
- LIMITS OF CONSTRUCTION
- OHW — ORDINARY HIGH WATER
- PL — PROPERTY BOUNDARY
- 20' WIDE SWALE
- MILL RACE PATH
- MAINTENANCE ACCESS ROAD
- ASPHALT TRANSITION

SITE PLAN NOTES

- (P) SERVICE PANEL ON INTERIOR OF ELECTRICAL CHASE. INSTALL PANEL WITH 200A ,MAIN BREAKER. INSTALL ADDITIONAL BREAKERS AS FOLLOWS: 20A 1-P (RATED 277V) FOR 120V PARKING LOT LIGHTING SYSTEM.
- (M) INSTALL 120/240 VOLT METER BASE, SINGLE PHASE METER SERVICE, TO BE INSTALLED BY SUB
- (JB) 22"x12"x12" (MIN. DIMENSION) PRE-CAST CONCRETE JUNCTION BOX WITH METAL LID. INCLUDE CONCRETE APRON FOR JB FOR FUTURE PATH COUNTER
- (N) INSTALL METAL LIGHT POLE NO. (N) LUMINAIRE AND FOUNDATION FOR PARKING LOT ILLUMINATION. CONTRACTOR SHALL ENSURE FOUNDATION BOLT PATTERN MATCHES POLE BASE.
- (ET) INSTALL ELECTRIC TIMER, HUBBELL BUILDING AUTOMATION CX LIGHTING CONTROL PANEL WITH ASTRONOMIC TIME CLOCK WITH 64 SCHEDULES, ON INTERIOR OF RESTROOM BUILDING. SEE WIRING DIAGRAM ON SHEET TH-12.
- (C) CAMERA - PANASONIC WV-SC385; HOUSING - PANASONIC POD9CWA (SILVER); LAN POWER - LP-2115 SINGLE PORT WALL PLUG POWER OVER ETHERNET MIDSPAN INJECTOR.
- (IC) IRRIGATION CONTROLLER - REFERENCE IRRIGATION PLANS FOR MULTI-STRAND WIRING TO VALVES.

METAL LIGHT POLE TABLE

POLE #	TYPE OF MOUNT	OFFSET (FT)	LUMINAIRE WATTAGE	MOUNTING HEIGHT (FT)	ARM LENGTH (IN)	LIGHT DISTRIBUTION TYPE	NOTES
1	METAL POLE	NA	73W LED	19.5	8	F-C-III	
2	METAL POLE	NA	73W LED	19.5	8	F-C-III	
3	METAL POLE	5 *	73W LED	19.5	8	F-C-III	INSTALL ADDITIONAL CONDUIT IN POLE BASE FOR SECURITY CAMERA
4	METAL POLE	NA	73W LED	19.5	8	F-C-III	
5	METAL POLE	NA	73W LED	19.5	8	F-C-III	
6	METAL POLE	5 *	73W LED	19.5	8	F-C-III	INSTALL ADDITIONAL CONDUIT IN POLE BASE FOR SECURITY CAMERA

* OFFSET IS MEASURED FROM EDGE OF CURB OR SIDEWALK .
F-C-III FULL-CUTOFF-TYPE 3 LIGHT DISTRIBUTION
LED LIGHT-EMMITING DIODE
LUMINAIRE KIM LIGHTING - MODEL# 1SA-WP9SE3-60L5K120-BL-SF/TL
POLE KIM LIGHTING - MODEL# KSS20-4120, SQUARE STEEL POLE

PIPING TABLE

PIPE #	PIPE SIZE/TYPE	CONDUCTOR TYPE	CONDUCTOR SIZE
1	1-1/4" SCH 40 PVC	COPPER XHHW	2-#6 W/ #6 GROUND
2	1-1/4" SCH 40 PVC	COPPER XHHW	2-#6 W/ #6 GROUND
3	1-1/4" SCH 40 PVC	COPPER XHHW	2-#6 W/ #6 GROUND
4	1-1/4" SCH 40 PVC	COPPER XHHW	2-#6 W/ #6 GROUND
5	1-1/4" SCH 40 PVC	COPPER XHHW	2-#6 W/ #6 GROUND
6	1-1/4" SCH 40 PVC	COPPER XHHW	2-#6 W/ #6 GROUND
7	1-1/4" SCH 40 PVC	COPPER XHHW	2-#6 W/ #6 GROUND
8	2" SCH 40 PVC	CAT 6	CAT 6 - CAMERA
9	MAIN RUN 3 - 2" & 1 - 3" SCH 40 PVC	COPPER XHHW	3-4/0
10	1-1/2" SCH 40 PVC	PULL STRING	TBD - FUTURE PATH COUNTER
11	2" SCH 40 PVC	PULL STRING	TBD - FUTURE PATH LIGHTS

GENERAL NOTES

1. LOCATIONS OF POLES, JUNCTION BOXES AND CONDUIT SHALL BE INSTALLED AS SHOWN IN PLANS. IF CONFLICTS ARISE, POLE JUNCTION BOX AND CONDUIT LOCATIONS MAY BE MODIFIED IN THE FIELD WITH PROJECT ENGINEER APPROVAL. PLACE CONDUIT IN THE SAME TRENCH AS OTHER CONDUIT WHERE POSSIBLE.
2. ALL MATERIALS AND WORKMANSHIP SHALL CONFORM TO THE REQUIREMENTS OF THE OREGON STANDARD DRAWINGS (2015), THE OREGON STANDARD SPECIFICATION FOR CONSTRUCTION (2015), AND THE STANDARD SPECIFICATIONS AND SPECIAL PROVISIONS OF THIS CONTRACT.
3. THE LOCATIONS OF EXISTING UTILITIES SHALL BE VERIFIED. COORDINATE ALL WORK WITH THE UTILITY COMPANIES TO ELIMINATE CONFLICT.
4. ILLUMINATION SYSTEM MUST COMPLY WITH CITY OF SPRINGFIELD DESIGN MANUAL.
5. CONTRACTOR TO SUBMIT MANUFACTURES'S CUT SHEETS FOR STREET LIGHTING EQUIPMENT. SEE SPECIAL PROVISIONS FOR DETAILS.
6. JUNCTION BOX LIDS TO BE BROWN OR BLACK, LOCKING LIDS PREFERRED.

CONSTRUCTION NOTES

1. SERVICE CONDUIT, WIRE, METER, AND TRANSFORMER TO BE INSTALLED BY SUB.
2. INSTALL CONDUIT AND SPECIFIED WIRE INTO THE SERVICE PANEL AND ELECTRONIC TIMER TO BE MOUNTED ON THE INTERIOR WALL OF THE ELECTRICAL CHASE. CONDUIT AND WIRE INSTALLED TO SUB STANDARDS.
3. INSTALL EMPTY CONDUIT WITH PULL LINE FOR FUTURE USE.
4. INSTALL EMPTY CONDUIT STUBS INTO THE RESTROOM ELECTRICAL CHASE FOR FUTURE ELECTRICAL CONNECTIONS.

REGISTERED PROFESSIONAL ENGINEER 80570PE OREGON JUNE 02, 2010 DANIEL E. SCHALL 6/5/15
EXP: 6/30/16

SCALE: 1" = 20'
20' 10' 0 20'

N

100% DESIGN
FINAL DESIGN
ISSUE FOR BID & CONSTRUCTION

willamalane Park and Recreation District

LANDSCAPE ARCHITECTS SCHIRMER SATRE GROUP

Revisions and Addendums			
Description	Date	No.	By
30% DESIGN	2/3/15	1	DS
REVISED 30% DESIGN	2/16/15	2	DS
60% DESIGN	4/3/15	3	DS
90% DESIGN	4/24/15	4	DS
DRAFT 100% DESIGN	5/15/15	5	DS
FINAL 100% DESIGN	6/5/15	6	DS

amec foster wheeler

SPRINGFIELD OREGON

THE CITY OF SPRINGFIELD
DEVELOPMENT & PUBLIC WORKS
225 FIFTH STREET
SPRINGFIELD, OREGON 97477
VOICE: 541-726-3753
FAX: 541-726-2309
WWW.SPRINGFIELD-OR.GOV

DESIGN: DS | DRAWN: PM | CHECK: HM | PROJ. NO: P21052 | BID ON: 6/10/15

SPRINGFIELD MILL RACE STORMWATER FACILITY, BOOTH KELLY TRAILHEAD & MILL RACE PATH

TRAILHEAD ELECTRICAL & ILLUMINATION PLAN

THIS DRAWING IS FULL SIZE WHEN PLOTTED AT 22"x34".

Plotted by:MCCARTY, PATRICK on Friday, June 05, 2015 at 11:13:18 AM from the TH-10 layout tab
File Name:P:\work\12305\12305\12795\Dwg_LDSA_DESIGN\TH10 - PROPOSED ELECTRICAL - 100%.DWG

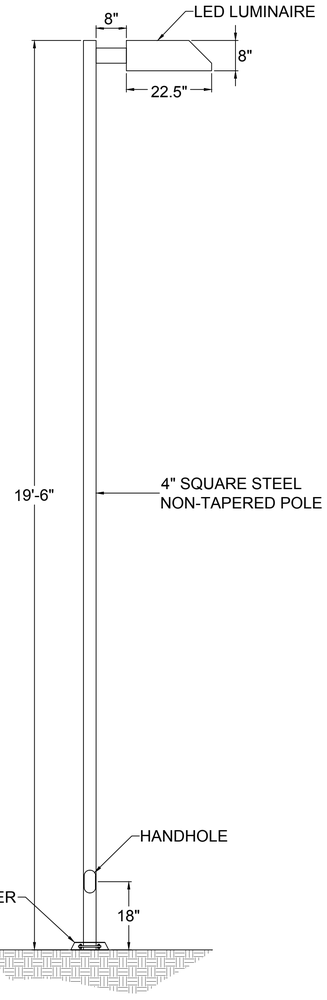

NOTE:
1. MOUNT CAMERA TO LIGHT POLE NUMBER 3 & 6.
2. COORDINATE WITH WILLAMALANE ON HEIGHT AND CAMERA DIRECTION

METAL LIGHT POLE (A / TH-11)
NTS

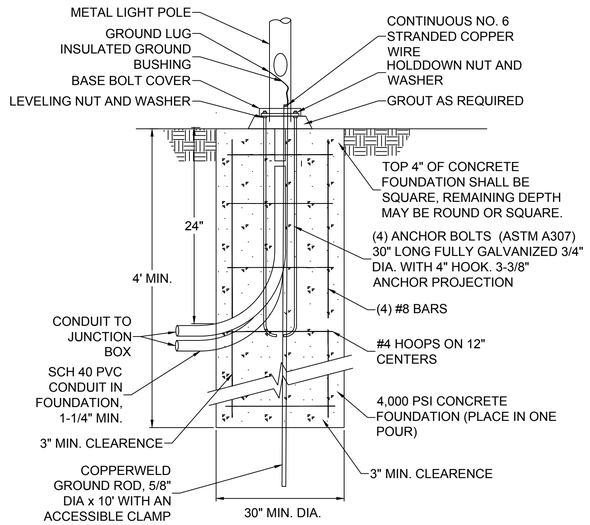

CONCRETE FOUNDATION (B / TH-11)
NTS

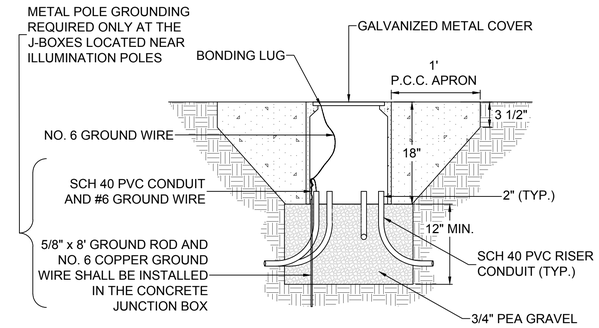

NOTE:
1. ILLUMINATION CIRCUIT WIRES ARE NOT SHOWN, SEE ILLUMINATION PLANS.
2. ILLUMINATION CIRCUITS SHALL BE SPLICED ACCORDING TO SECTION 02920.25
3. POLYMER CONCRETE JUNCTION BOX COVER, IF USED, IS NOT REQUIRED TO BE BONDED.
4. METALLIC CONDUIT, IF USED, SHALL BE BONDED AND CONNECTED TO CIRCUIT GROUND WIRES.

CONCRETE JUNCTION BOX INSTALLATION WITH APRON (C / TH-11)
NTS

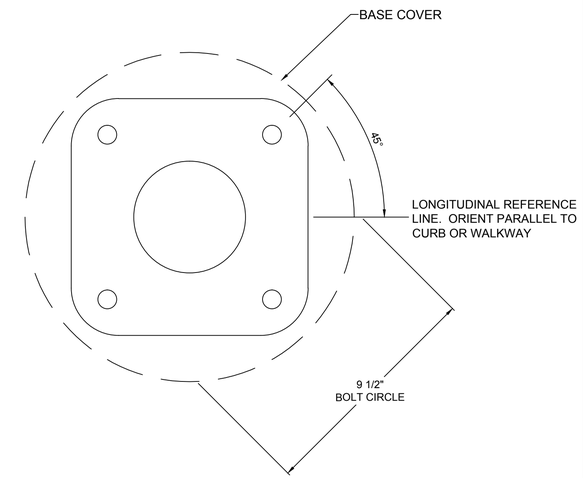

BASE DETAIL (D / TH-11)
NTS

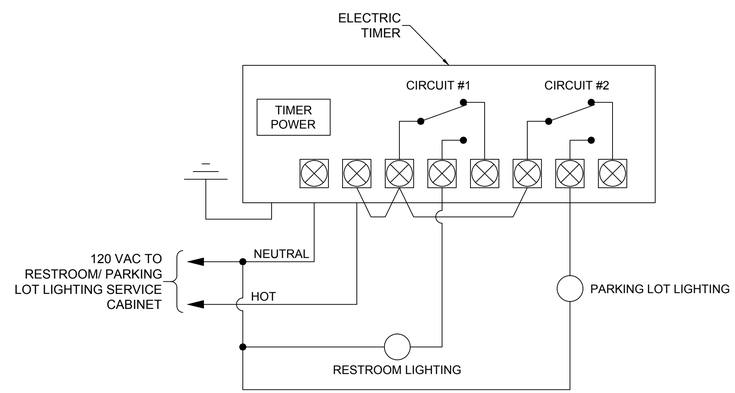

WIRING DIAGRAM - ELECTRONIC TIMER FOR RESTROOM LIGHTING AND PARKING LOT LIGHTING SYSTEM (E / TH-11)
NTS

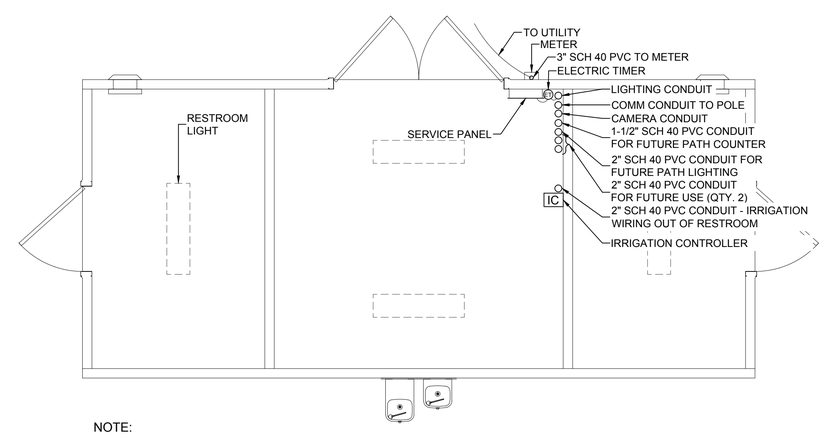

NOTE:
1. RESTROOM LIGHTS - 2-BULB 4' FLUORESCENT LIGHT FIXTURE - OCCUPY SENSOR ACTIVATED WITH ELECTRIC TIMER

UTILITY CLOSET LAYOUT (F / TH-11)
NTS

REGISTERED PROFESSIONAL ENGINEER 80570PE OREGON JUNE 02, 2010 DANIEL E. SCHALL 6/5/15
EXP: 6/30/16

100% DESIGN
FINAL DESIGN
ISSUE FOR BID & CONSTRUCTION

Plotted by:MCCARTHY, PATRICK on Friday, June 05, 2015 at 11:43:33 AM from the Th-11 layout tab
File: Name:Drawing1-V2003(12)(20)(12)(20)(12)(20)(12)(20)(1).dwg Layout: LAYOUT1 Scale: 1.00000000000000 - 1.00000000000000

willamalane Park and Recreation District
LANDSCAPE ARCHITECTS SCHIRMER SATRE GROSS INC.

Revisions and Addendums			
Description	Date	No.	By
30% DESIGN	2/3/15	1	DS
REVISED 30% DESIGN	2/16/15	2	DS
60% DESIGN	4/3/15	3	DS
90% DESIGN	4/24/15	4	DS
DRAFT 100% DEISGN	5/15/15	5	DS
FINAL 100% DESIGN	6/5/15	6	DS

amec foster wheeler

SPRINGFIELD OREGON

THE CITY OF SPRINGFIELD
DEVELOPMENT & PUBLIC WORKS
225 FIFTH STREET
SPRINGFIELD, OREGON 97477
VOICE: 541-726-3753
FAX: 541-726-2309
WWW.SPRINGFIELD-OR.GOV

DESIGN: PM | DRAWN: DS | CHECK: HM | PROJ. NO: P21052 | BID ON: 6/10/15

SPRINGFIELD MILL RACE STORMWATER FACILITY, BOOTH KELLY TRAILHEAD & MILL RACE PATH
TRAILHEAD ELECTRICAL & ILLUMINATION DETAILS

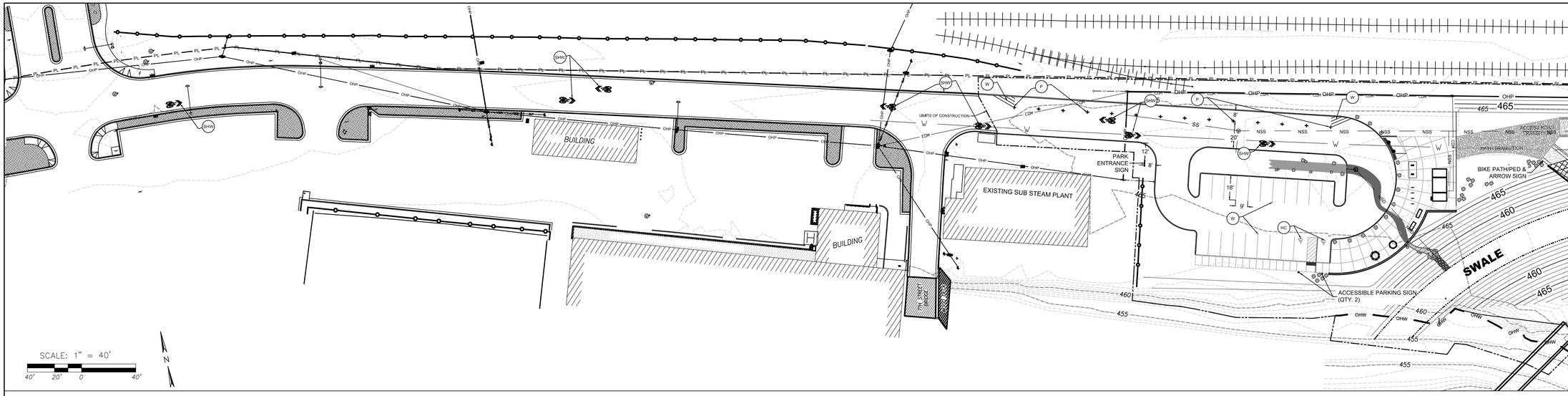

LEGEND

- STORM SEWER MANHOLE
- SANITARY SEWER MANHOLE
- RAIN GARDEN INLET
- AREA DRAIN
- UTILITY POLE
- GUY-WIRE ANCHOR
- CONSTRUCTION NOTES
- LIGHT POLE
- RAILROAD TRACKS
- FENCE
- OHP — OVERHEAD POWER LINES
- E — PROPOSED ELECTRIC CONDUIT
- PROPOSED CAMERA CONDUIT
- GUY-WIRE
- SD — EXISTING STORM SEWER
- NSD — NEW STORM SEWER
- SS — EXISTING SANITARY SEWER
- NSS — NEW SANITARY SEWER
- EXISTING MAJOR CONTOUR
- EXISTING MINOR CONTOUR
- PROPOSED MAJOR CONTOUR
- PROPOSED MINOR CONTOUR
- W — PROPOSED FUTURE SUB WATERLINE
- LIMITS OF CONSTRUCTION
- OHW — ORDINARY HIGH WATER
- PL — PROPERTY BOUNDARY
- 20' WIDE SWALE
- MILL RACE PATH
- MAINTENANCE ACCESS ROAD
- ASPHALT TRANSITION

MARKINGS

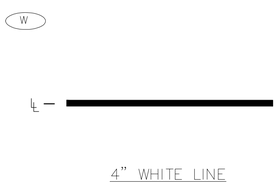

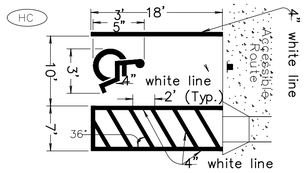

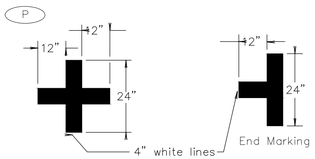

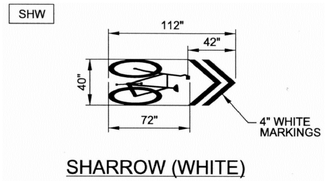

NOTES

1. ALL MATERIALS AND WORKMANSHIP SHALL CONFORM TO THE REQUIREMENTS OF THE MANUAL OF UNIFORM TRAFFIC CONTROL DEVICES (M.U.T.C.D.) LATEST EDITION ADOPTED BY ODOT, THE OREGON STANDARD DRAWINGS, CITY OF SPRINGFIELD STANDARDS, THE OREGON STANDARD SPECIFICATIONS FOR CONSTRUCTION (2015), AND THE SPECIAL PROVISIONS CONTRACT.
2. TYPE B-HS, PREFORMED, FUSED THERMOPLASTIC FILM MATERIAL SHALL BE USED FOR ALL ARROWS, AND BIKE SYMBOLS. PAINT SHALL BE USED FOR LONGITUDINAL PAVEMENT LINES.
3. ALL SIGNS SHOULD BE STAKED AND THEN INSPECTED BEFORE INSTALLATION.
4. LANE LINE DIMENSIONS ARE SHOWN ON STRIPING PLANS.
5. POSTS FOR SIGNS, REFER TO TM670 & TM676, ODOT STANDARD DRAWINGS.

SIGNS

R7–8 – RESERVED PARKING SIGN

R7–8b – VAN ACCESSIBLE SIGN

NOTE:
1. WOOD POST 4"x4", 7' VERTICAL CLEARANCE FROM BOTTOM OF SIGN TO GROUND LINE
2. FOOTING DEPTH 4'-0"
3. INSTALL AT BACK EDGE OF SIDEWALK

W11–15 COMBINED BIKE–PED 30x30

NOTE:
1. WOOD POST 4"x6", MIN. 4' VERTICAL CLEARANCE FROM BOTTOM OF SIGN TO GROUND LINE.
2. FOOTING DEPTH 5'-0"
3. EDGE OF SIGN, INSTALL 1-FOOT FROM GRAVEL SHOULDER

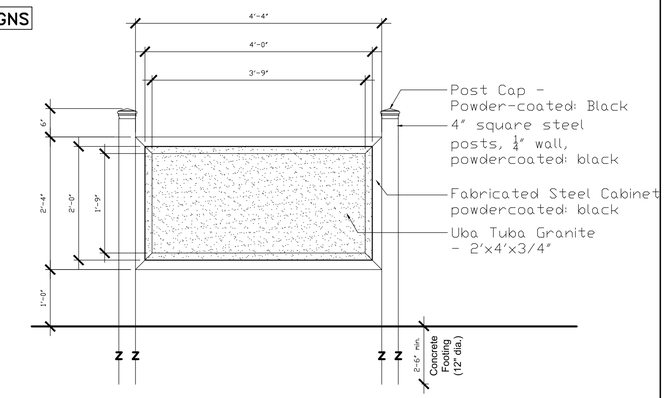

PARK ENTRANCE SIGN FRAME — A / TH-12

3/4" = 1'-0"

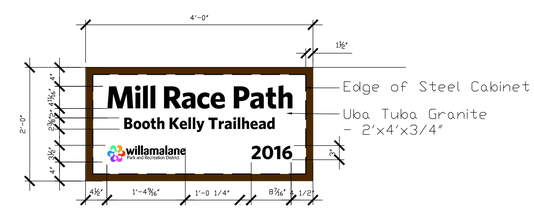

NOTE: Font is Whitney Bold, centered; logo is converted to outlines

PARK ENTRANCE SIGN GRANITE — B / TH-12

3/4" = 1'-0"

REGISTERED PROFESSIONAL ENGINEER 80570PE OREGON JUNE 02, 2010 DANIEL E. SCHALL 6/5/15
EXP: 6/30/16

100% DESIGN
FINAL DESIGN
ISSUE FOR BID & CONSTRUCTION

Revisions and Addendums			
Description	Date	No.	By
30% DESIGN	2/3/15	1	DS
REVISED 30% DESIGN	2/16/15	2	DS
60% DESIGN	4/3/15	3	DS
90% DESIGN	4/24/15	4	DS
DRAFT 100% DESIGN	5/15/15	5	DS
FINAL 100% DESIGN	6/5/15	6	DS

willamalane Park and Recreation District · LANDSCAPE ARCHITECTS SCHIRMER SATRE GROUP · amec foster wheeler

DESIGN: DS | DRAWN: PM | CHECK: HM | PROJ. NO: P21052 | BID ON: 6/10/15

THE CITY OF SPRINGFIELD
DEVELOPMENT & PUBLIC WORKS
225 FIFTH STREET
SPRINGFIELD, OREGON 97477
VOICE: 541–726–3753
FAX: 541–726–2309
WWW.SPRINGFIELD–OR.GOV

SPRINGFIELD MILL RACE STORMWATER FACILITY, BOOTH KELLY TRAILHEAD & MILL RACE PATH

TRAILHEAD PAVEMENT MARKINGS & SIGNAGE

SHEET TH–12

THIS DRAWING IS FULL SIZE WHEN PLOTTED AT 22"x34".

Plotted by/HOWARTHU, RAYMON on Friday, June 05, 2015 at 11:14:18 AM from the MARKINGS layout tab
File name/drawing:C:\2015\11-2015\11-2015-11-0001_SPRINGFIELD_MILL_RACE_DESIGN\Plot = PROPOSED.CTB/PNP.DWG

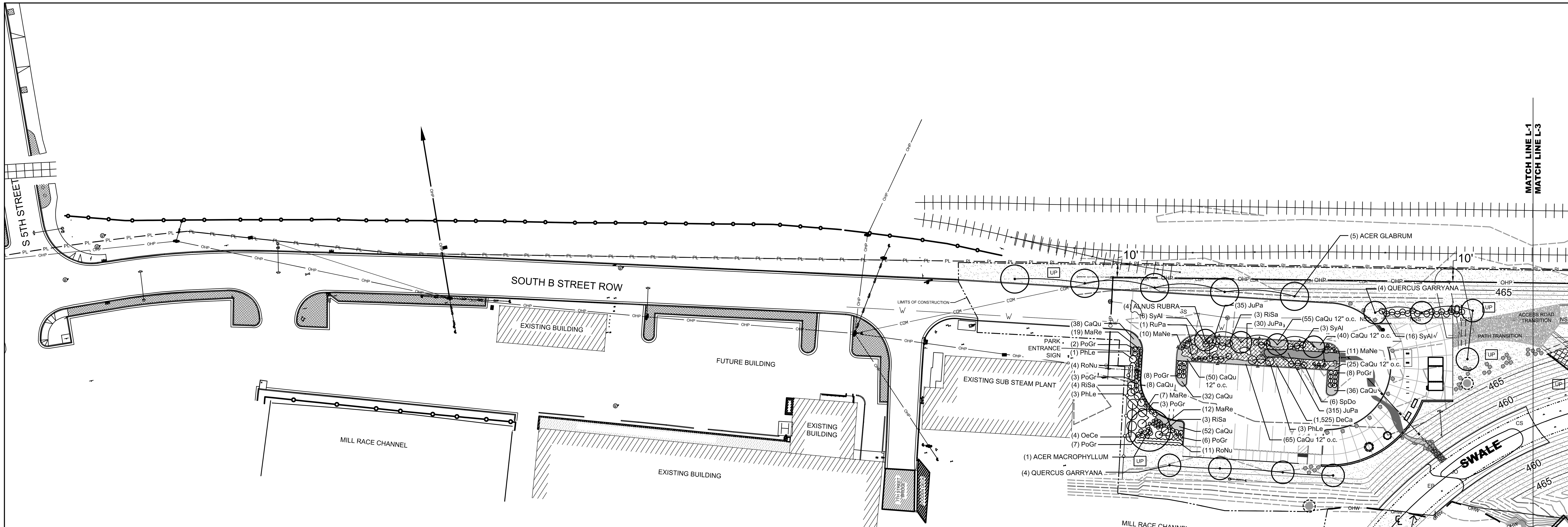

PLANT LIST

TRAILHEAD					
Qty.	Code	Botanical Name	Common Name	Size	Comments
Trees					
5		Acer glabrum var. douglasii	Douglas Maple	1 1/2" cal.	Matched, evenly branched
1		Acer macrophyllum	Big Leaf Maple	1 1/2" cal.	Full, upright
4		Alnus rubra	Red Alder	1 1/2" cal.	Matched, evenly branched
8		Quercus garryana	Oregon White Oak	1 1/2" cal.	Matched, evenly branched
Shrubs					
21	MaNe	Mahonia nervosa	Dull Oregon Grape	1 gal.	
38	MaRe	Mahonia repens	Creeping Oregon Grape	1 gal.	
4	OeCe	Oemleria cerasiformis	Osoberry	3 gal.	
7	PhLe	Philadelphus lewisii	Mock Orange	3 gal.	
10	RiSa	Ribes sanguineum	Red Flowering Current	3 gal.	
15	RoNu	Rosa nutkana	Nootka Rose	2 gal.	
1	RuPa	Rubus parviflorus	Thimbleberry	3 gal.	
6	SpDo	Spiraea douglasii	Douglas Spirea	3 gal.	
25	SyAl	Symphoricarpos albus	Common Snowberry	2 gal.	
Perennials					
166	CaQu	Camassia quamash	Common Camas	4" pot	
37	PoGr	Potentilla gracilis var. gracilis	Graceful Cinquefoil	1 gal.	
Rain Garden Groundcover (Total area 2,140 square feet)					
235	CaQu	Camassia quamash	Common Camas	4" pot	1' on center
1,525	DeCa	Deschampsia caespitosa	Tufted Hairgrass	4" pot	1' on center
380	JuPa	Juncus patens	Spreading Rush	4" pot	1' on center
		Total 2,140 Groundcover plants in Rain Garden -			
		2,140 sf @ 100 4" groundcover plants per 100 square feet (Planting Scheme I)			
STORMWATER FACILITY AND PATH					
Trees					
26		Alnus rubra	Red Alder	1 1/2" cal.	
35		Fraxinus latifolia	Oregon Ash	1 1/2" cal.	
37		Pinus ponderosa	Willamette Valley Ponderosa Pine	5'-6'	
5		Quercus garryana	Oregon White Oak	1 1/2" cal.	
105		Salix sitchensis	Sitka Willow	1 gal.	
16		Thuja plicata	Western Red Cedar	5'-6'	
Plugs					
1162	CO	Carex obnupta	Slough Sedge	plugs	1' on center
2560	CS	Carex stipata	Sawbeak Sedge	plugs	1' on center
4300	EP	Eleocharis palustris	Creeping Spike Rush	plugs	1' on center
1033	GO	Glyceria occidentalis	Western Managrass	plugs	1' on center
318	JO	Juncus oxymeris	Pointed Rush	plugs	3' on center
260	SM	Scirpus microcarpus	Small Flowering Bullrush	plugs	3' on center

Qty.		Botanical Name	Common Name	Size	Comments
Pond Forebay (Application at a rate of 14 lbs per acre)					
		Alisma subcordatum	American Water Plantain	seed	60% of seed mix
		Scirpus microcarpus	Small Fruited Bulrush	seed	25% of seed mix
		Sparganium emersum	Narrowleaf Bur-reed	seed	15% of seed mix
Pond Seed Mix (Application at a rate of 16 lbs per acre)					
		Alisima subcordatum	American Water Plantain	seed	10% of seed mix
		Beckmannia syzigachne	American Sloughgrass	seed	30% of seed mix
		Eleocharis palustris	Creeping Spike Rush	seed	20% of seed mix
		Glyceria occidentalis	Western Managrass	seed	20% of seed mix
		Leersia oryzoides	Rice Cutgrass	seed	10% of seed mix
		Sagittaria latifolia	Wapato	seed	10% of seed mix
Pond Edge Seed Mix (Application at a rate of 18 lbs per acre)					
		Beckmannia syzigachne	American Sloughgrass	seed	25% of seed mix
		Carex obnupta	Slough Sedge	seed	10% of seed mix
		Carex stipata	Sawbeak Sedge	seed	10% of seed mix
		Eleocharis palustris	Creeping Spike Rush	seed	10% of seed mix
		Glyceria occidentalis	Western Managrass	seed	25% of seed mix
		Juncus oxymeris	Pointed Rush	seed	10% of seed mix
		Sagittaria latifolia	Wapato	seed	10% of seed mix
Stormwater Swale - Lower End Seed Mix (Application at a rate of 10 lbs per acre)					
		Carex stipata	Sawbeak Sedge	seed	10% of seed mix
		Deschampsia cespitosa	Tufted Hairgrass	seed	60% of seed mix
		Juncus tenuis	Slender Rush	seed	25% of seed mix
Stormwater Swale - Upper End Seed Mix (Application at a rate of 10 lbs per acre)					
		Carex densa	Dense Sedge	seed	10% of seed mix
		Carex stipata	Awl-fruited Sedge	seed	10% of seed mix
		Deschampsia cespitosa	Tufted Hairgrass	seed	35% of seed mix
		Elymus glaucus	Blue Wildrye	seed	30% of seed mix
		Grindellia integrifolia	Pudget Sound Gumweed	seed	15% of seed mix
Upland Seed Mix (application at a rate of 18 lbs per acre)					
		Achillea millefolium	Common Yarrow	seed	15% of seed mix
		Bromus carinatus	California Brome	seed	10% of seed mix
		Bromus vulgaris	Columbia Brome	seed	15% of seed mix
		Danthonia californica	California Oatgrass	seed	15% of seed mix
		Elymus glaucus	Blue Wildrye	seed	15% of seed mix
		Festuca Roemeri	Roemers Fescue	seed	5% of seed mix
		Lupinus Rivularis	Riverbank Lupine	seed	15% of seed mix
		Prunella vulgaris	Self-Heal	seed	10% of seed mix

NOTES

1. PROTECT ALL TREES TO REMAIN WITH CONSTRUCTION FENCING LOCATED OUTSIDE THE DRIP LINE. MAINTAIN FENCING THROUGHOUT THE CONSTRUCTION PERIOD. DO NOT STORE MATERIALS OR OPERATE HEAVY EQUIPMENT WITHIN THE DRIP LINE OF EXISTING TREES TO REMAIN.
2. PROVIDE AND PLACE TOPSOIL AS FOLLOWS:
   - POND FOREBAY AND POND BOTTOM — NO ADDED TOPSOIL
   - TREES — 18 INCHES MINIMUM
   - RAIN GARDEN — 18 INCHES MINIMUM*
   - OTHER SEEDED AND PLANTED AREAS — 6 INCHES MINIMUM

   * RAIN GARDEN GROWING MEDIUM SHALL BE A MIXTURE OF SANDY LOAM AND COMPOST AT A RATIO OF 2:1 BY VOLUME.
3. IRRIGATION LAYOUT IS DIAGRAMMATIC. FOLLOW NOTES AND DETAILS IN INSTALLING IRRIGATION COMPONENTS.
4. INSTALL PLANT MATERIALS IN ACCORDANCE WITH DETAILS, SPECIFICATIONS AND HORTICULTURAL BEST PRACTICES. PLANTS SHALL CONFORM TO THE APPLICABLE REQUIREMENTS OF THE CURRENT ISSUE OF THE "AMERICAN STANDARD FOR NURSERY STOCK", PUBLISHED BY THE AMERICAN ASSOCIATION OF NURSERYMEN.
5. PLUGS TO BE INSTALLED IN TRIANGULAR PATTERN AT SPECIFIED SPACING.
6. SEE SHEETS L-5 AND L-6 FOR DETAILS.

LEGEND

- STORM SEWER MANHOLE
- SANITARY SEWER MANHOLE
- AREA DRAIN
- UTILITY POLE
- GUY-WIRE ANCHOR
- RAILROAD TRACKS
- FENCE
- OHP — OVERHEAD POWER LINES
- PROPOSED ELECTRIC CONDUIT
- GUY-WIRE
- SD — EXISTING STORM SEWER
- NSD — NEW STORM SEWER
- SS — EXISTING SANITARY SEWER
- NSS — NEW SANITARY SEWER
- EXISTING MAJOR CONTOUR
- EXISTING MINOR CONTOUR
- PROPOSED MAJOR CONTOUR
- PROPOSED MINOR CONTOUR
- W — PROPOSED FUTURE SUB WATERLINE
- LIMITS OF CONSTRUCTION
- OHW — ORDINARY HIGH WATER
- PL — PROPERTY BOUNDARY
- BUFFER AROUND UTILITY POLES AND GUY-WIRES
- 20' WIDE SWALE
- 25' WETLAND BUFFER
- WETLAND BOUNDARY (APPROXIMATE)
- MILL RACE PATH
- PROPOSED DECIDUOUS TREE
- PROPOSED CONIFEROUS TREE
- PROPOSED SHRUBS
- PROPOSED GROUNDCOVER (CAMASSIA QUAMASH)
- PROPOSED GROUNDCOVER (DESCHAMPSIA CAESPITOSA)
- IRRIGATION MAINLINE - 2 1/2 INCH PVC, SCHEDULE 40
- IRRIGATION SLEEVE - 6 INCH
- IRRIGATION LATERAL
- M — PROPOSED IRRIGATION METER - SEE SHEET TH-3
- BFP — BACKFLOW PREVENTION DEVICE - SEE DETAIL 3/L-6
- FS — FLOW SENSOR AND MASTER VALVE - SEE DETAIL 4/L-6
- IRRIGATION CONTROLLER
- IRRIGATION CONTROLLER - BATTERY OPERATED
- DRIPLINE TREE RING - SEE DETAIL 7/L6; DRIP EMITTER AT SHRUB - SEE DETAIL 6/L-6
- CONTROL VALVE ASSEMBLY - - SEE DETAIL 5/L-6; GPM AND VALVE SIZE AS SHOWN ON PLAN
- DRIP ZONE CONTROL VALVE ASSEMBLY; GPM AND VALVE SIZE AS SHOWN ON PLAN AS BELOW: 1 — CONTROLLER AND ZONE NUMBER; 23 — GPM; 1 — VALVE SIZE

PLUGS

CO	CAREX OBNUPTA
CS	CAREX STIPATA
EP	ELEOCHARIS PALUSTRIS
GO	GLYCERIA OCCIDENTALIS
JO	JUNCUS OXYMERIS
SM	SCIRPUS MICROCARPUS

PLANTING DESIGNATIONS / SEED MIXES

- FB — POND FOREBAY
- PD — POND
- PE — POND EDGE
- SL — STORMWATER SWALE - LOWER END
- SU — STORMWATER SWALE - UPPER END
- UP — UPLANDS

EXISTING TREES

- EXISTING DEAD TREES WITH POTENTIAL HABITAT VALUE
- EXISTING TREES TO BE REMOVED DUE TO CONSTRUCTION
- EXISTING TREES TO REMAIN. PROTECT DURING CONSTRUCTION.

SCALE: 1" = 40'
40' 20' 0 40'
N

REGISTERED LANDSCAPE ARCHITECT RICHARD M. SATRE OREGON 84

willamalane Park and Recreation District

SCHIRMER SATRE GROUP LANDSCAPE ARCHITECTS

Revisions and Addendums			
Description	Date	No.	By
60% DESIGN	4/7/14	1	mas
90% DESIGN	11/7/14	2	jsb
DRAFT 100% DESIGN	5/15/15	3	jsb
100% DESIGN	6/5/15	4	jsb
FINAL 100% DESIGN	6/5/15	5	jsb

amec foster wheeler

SPRINGFIELD OREGON

THE CITY OF SPRINGFIELD
DEVELOPMENT & PUBLIC WORKS
225 FIFTH STREET
SPRINGFIELD, OREGON 97477
VOICE: 541-726-3753
FAX: 541-726-3689
WWW.SPRINGFIELD-OR.GOV

DESIGN: jsb | DRAWN: jsb | CHECK: RMS | PROJ. NO:P21052 | BID ON:6/10/15

SPRINGFIELD MILL RACE STORMWATER FACILITY, BOOTH KELLY TRAILHEAD & MILL RACE PATH

LANDSCAPE PLAN - WEST

SHEET L-1
42 OF 47

THIS DRAWING IS FULL SIZE WHEN PLOTTED AT 22"x34".

Plotted by:MCCARTHY, PATRICK on Friday, June 05, 2015 at 10:58:03 AM from the L-1 layout tab
File Name/Path:K:\12000\12700\12790\127901\DWG_100%_DESIGN\STORMWATER_LANDSCAPE_CD100% (6.3.15) - FINAL\STORMWATER_LANDSCAPE_CD100% (6.3.15).DWG

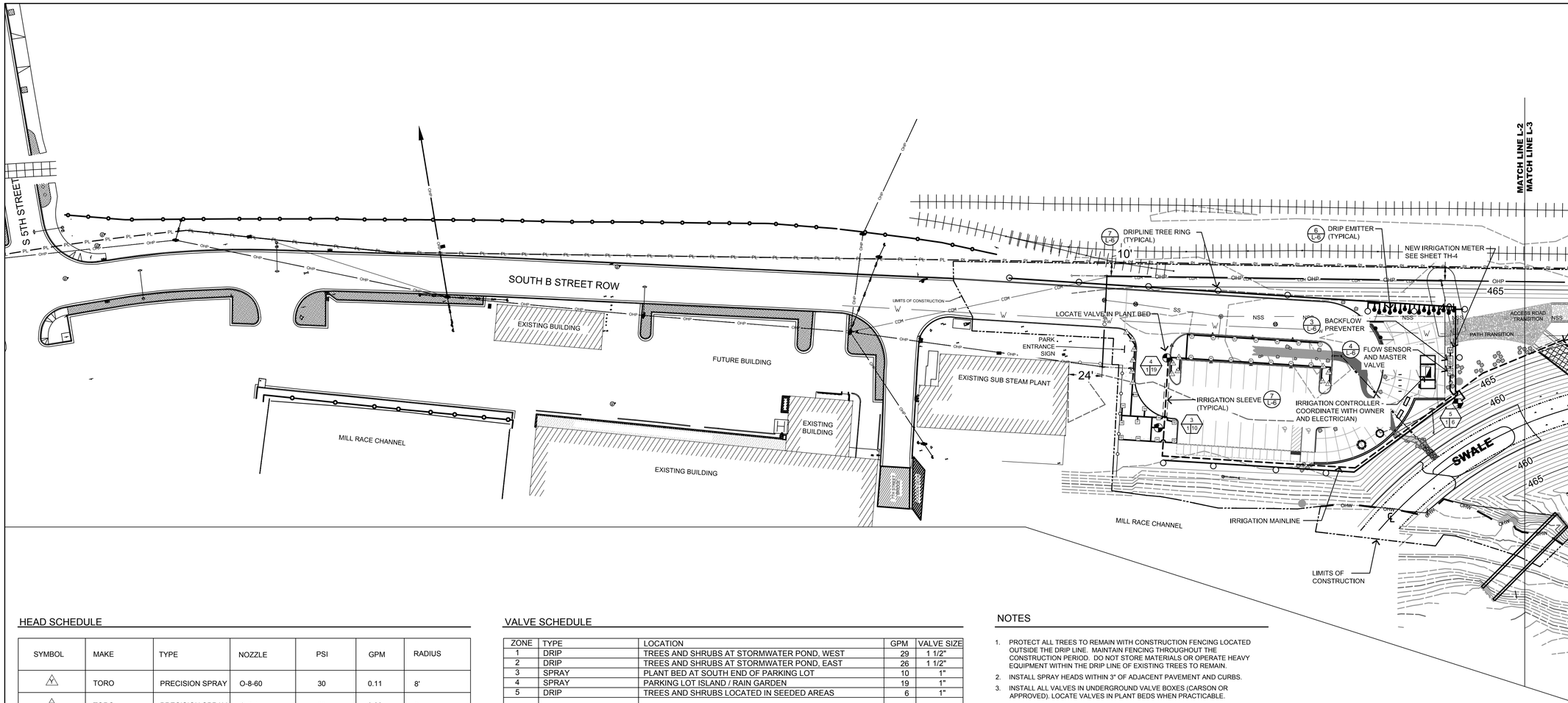

LEGEND

- STORM SEWER MANHOLE
- SANITARY SEWER MANHOLE
- AREA DRAIN
- UTILITY POLE
- GUY-WIRE ANCHOR
- RAILROAD TRACKS
- FENCE
- OHP — OVERHEAD POWER LINES
- PROPOSED ELECTRIC CONDUIT
- GUY-WIRE
- SD — EXISTING STORM SEWER
- NSD — NEW STORM SEWER
- SS — EXISTING SANITARY SEWER
- NSS — NEW SANITARY SEWER
- EXISTING MAJOR CONTOUR
- EXISTING MINOR CONTOUR
- PROPOSED MAJOR CONTOUR
- PROPOSED MINOR CONTOUR
- W — PROPOSED FUTURE SUB WATERLINE
- LIMITS OF CONSTRUCTION
- OHW — ORDINARY HIGH WATER
- PL — PROPERTY BOUNDARY
- BUFFER AROUND UTILITY POLES AND GUY-WIRES
- 20' WIDE SWALE
- 25' WETLAND BUFFER
- WETLAND BOUNDARY (APPROXIMATE)
- MILL RACE PATH
- PROPOSED DECIDUOUS TREE
- PROPOSED CONIFEROUS TREE
- PROPOSED SHRUBS
- PROPOSED GROUNDCOVER (CAMASSIA QUAMASH)
- PROPOSED GROUNDCOVER (DESCHAMPSIA CAESPITOSA)
- IRRIGATION MAINLINE - 2 1/2 INCH PVC, SCHEDULE 40
- IRRIGATION SLEEVE - 6 INCH
- IRRIGATION LATERAL
- M — PROPOSED IRRIGATION METER - SEE SHEET TH-3
- BFP — BACKFLOW PREVENTION DEVICE - SEE DETAIL 3/L-6
- FS — FLOW SENSOR AND MASTER VALVE - SEE DETAIL 4/L-6
- IRRIGATION CONTROLLER
- IRRIGATION CONTROLLER - BATTERY OPERATED
- DRIPLINE TREE RING - SEE DETAIL 7/L-6
- DRIP EMITTER AT SHRUB - SEE DETAIL 6/L-6
- CONTROL VALVE ASSEMBLY - - SEE DETAIL 5/L-6 GPM AND VALVE SIZE AS SHOWN ON PLAN
- DRIP ZONE CONTROL VALVE ASSEMBLY GPM AND VALVE SIZE AS SHOWN ON PLAN AS BELOW:
  - 1 — CONTROLLER AND ZONE NUMBER
  - 1.23 — GPM
  - VALVE SIZE

PLUGS

CO	CAREX OBNUPTA
CS	CAREX STIPATA
EP	ELEOCHARIS PALUSTRIS
GO	GLYCERIA OCCIDENTALIS
JO	JUNCUS OXYMERIS
SM	SCIRPUS MICROCARPUS

PLANTING DESIGNATIONS / SEED MIXES

- FB — POND FOREBAY
- PB — POND
- PE — POND EDGE
- SL — STORMWATER SWALE - LOWER END
- SU — STORMWATER SWALE - UPPER END
- UP — UPLANDS

EXISTING TREES

- EXISTING DEAD TREES WITH POTENTIAL HABITAT VALUE
- EXISTING TREES TO BE REMOVED DUE TO CONSTRUCTION
- EXISTING TREES TO REMAIN. PROTECT DURING CONSTRUCTION.

SCALE: 1" = 40'

40' 20' 0 40'

N

HEAD SCHEDULE

SYMBOL	MAKE	TYPE	NOZZLE	PSI	GPM	RADIUS
A	TORO	PRECISION SPRAY	O-8-60	30	0.11	8'
T	TORO	PRECISION SPRAY	O-8-T	30	0.22	8'
H	TORO	PRECISION SPRAY	O-8-H	30	0.33	8'
K	TORO	PRECISION SPRAY	O-8-TQ	30	0.49	8'
Q	TORO	PRECISION SPRAY	O-12-Q	30	0.37	12'
H	TORO	PRECISION SPRAY	O-12-H	30	0.74	12'
F	TORO	PRECISION SPRAY	O-12-F	30	1.48	12'
T	TORO	PRECISION SPRAY	O-15-T	30	0.77	15'
H	TORO	PRECISION SPRAY	O-15-H	30	1.16	15'

PROVIDE 6" POP-UP BODIES. TORO 570ZPR SERIES WITH BUILD-IN PRESSURE REGULATION, OR APPROVED.

VALVE SCHEDULE

ZONE	TYPE	LOCATION	GPM	VALVE SIZE
1	DRIP	TREES AND SHRUBS AT STORMWATER POND, WEST	29	1 1/2"
2	DRIP	TREES AND SHRUBS AT STORMWATER POND, EAST	26	1 1/2"
3	SPRAY	PLANT BED AT SOUTH END OF PARKING LOT	10	1"
4	SPRAY	PARKING LOT ISLAND / RAIN GARDEN	19	1"
5	DRIP	TREES AND SHRUBS LOCATED IN SEEDED AREAS	6	1"

IRRIGATION EQUIPMENT

1. CONTROLLER:
   IRRIGATION CADDY IC-W1 V2 WiFi WEB BASED IRRIGATION CONTROLLER
   KGControls LLC
   2606 Orsobello Place
   Cedar Park, TX 78613
   (800) 284-1072
   www.irrigationcaddy.com
2. CONTROLLER, BATTERY OPERATED:
   HUNTER NODE-200
3. AUTOMATIC CONTROL VALVE:
   RAIN BIRD PEB SERIES
4. AUTOMATIC CONTROL VALVE, DRIP ZONE:
   UP TO 10 GPM -
   RAIN BIRD 100-PEB-PRS-D WITH PRESSURE REGULATING MODULE AND ARKAL 3/4" DISC FILTER, 100 MICRON
   25 GPM TO 50 GPM -
   RAIN BIRD PEB-150 WITH PRS-DIAL PRESSURE REGULATING MODULE AND ARKAL 1" SUPER MANUAL DISC FILTER, 100 MICRON.
5. FOR ADDITIONAL PRODUCTS SEE DETAILS ON SHEET L-6.

NOTES

1. PROTECT ALL TREES TO REMAIN WITH CONSTRUCTION FENCING LOCATED OUTSIDE THE DRIP LINE. MAINTAIN FENCING THROUGHOUT THE CONSTRUCTION PERIOD. DO NOT STORE MATERIALS OR OPERATE HEAVY EQUIPMENT WITHIN THE DRIP LINE OF EXISTING TREES TO REMAIN.
2. INSTALL SPRAY HEADS WITHIN 3" OF ADJACENT PAVEMENT AND CURBS.
3. INSTALL ALL VALVES IN UNDERGROUND VALVE BOXES (CARSON OR APPROVED). LOCATE VALVES IN PLANT BEDS WHEN PRACTICABLE.
4. INSTALL ALL CONTROL WIRES IN SLEEVES WHERE THEY PASS UNDER PAVEMENT AND IN CONDUIT WHERE NOT ROUTED WITH MAINLINE.
5. IRRIGATION LAYOUT IS SCHEMATIC. ADJUST ROUTING OF IRRIGATION LINES AND HEADS AS NECESSARY TO AVOID EXISTING AND PROPOSED ELEMENTS.
6. WHERE PIPING OR EQUIPMENT ARE SHOWN IN PAVING FOR CLARITY, EQUIPMENT IS TO BE LOCATED IN ADJACENT LANDSCAPE AREAS.
7. COORDINATE LOCATION OF IRRIGATION CONTROLLER WITH OWNER AND ELECTRICAL. PROVIDE CONDUIT FOR CONTROL WIRES FROM CONTROLLER TO MAINLINE.
8. SEE SHEET L-6 FOR DETAILS.
9. VALVE BOX LIDS SHALL BE BLACK OR BROWN.
10. USE MULTI-STRAND WIRE BETWEEN CONTROLLER AND IRRIGATION CONTROL VALVES.

REGISTERED 2014 RICHARD M. SATRE OREGON LANDSCAPE ARCHITECT

willamalane Park and Recreation District

LANDSCAPE ARCHITECTS SCHIRMER SATRE GRUNDY INC

Revisions and Addendums			
Description	Date	No.	By
60% DESIGN	4/7/14	1	mas
90% DESIGN	11/7/14	2	jsb
DRAFT 100% DESIGN	5/15/15	3	jsb
100% DESIGN	6/5/15	4	jsb
FINAL 100% DESIGN	6/5/15	5	jsb

amec foster wheeler

DESIGN: jsb DRAWN: jsb

SPRINGFIELD OREGON

THE CITY OF SPRINGFIELD
DEVELOPMENT & PUBLIC WORKS
225 FIFTH STREET
SPRINGFIELD, OREGON 97477
VOICE: 541-726-3753
FAX: 541-726-3689
WWW.SPRINGFIELD-OR.GOV

CHECK: RMS PROJ. NO: P21052 BID ON: 6/10/15

SPRINGFIELD MILL RACE STORMWATER FACILITY, BOOTH KELLY TRAILHEAD & MILL RACE PATH

IRRIGATION PLAN - WEST

SHEET L-2

43 OF 47

THIS DRAWING IS FULL SIZE WHEN PLOTTED AT 22"x34".

Plotted by/CAD/PW: RATRICK on Friday, June 05, 2015 at 10:08:18 AM from the L-2 layout, tab
File: Home/Projects/120580/12750/12750/Land/L100&_DESIGN/STORMWATER_LANDSCAPE_03100B (6.5.15) - FINAL\STORMWATER_LANDSCAPE_03100B (6.5.15).DWG

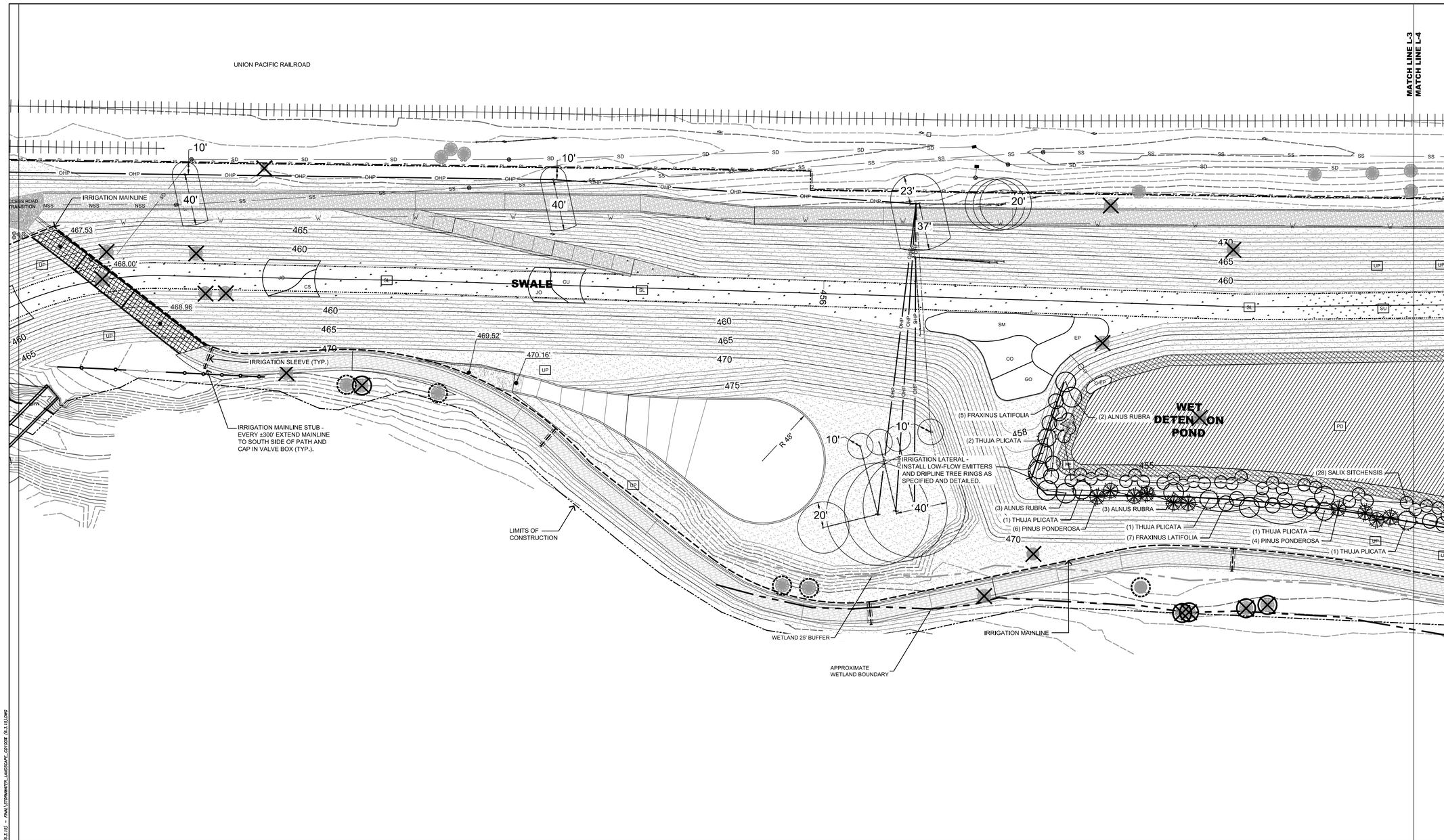

LEGEND

- STORM SEWER MANHOLE
- SANITARY SEWER MANHOLE
- AREA DRAIN
- UTILITY POLE
- GUY-WIRE ANCHOR
- RAILROAD TRACKS
- FENCE
- OHP — OVERHEAD POWER LINES
- PROPOSED ELECTRIC CONDUIT
- GUY-WIRE
- SD — STORM SEWER
- SS — SANITARY SEWER
- EXISTING MAJOR CONTOUR
- EXISTING MINOR CONTOUR
- PROPOSED MAJOR CONTOUR
- PROPOSED MINOR CONTOUR
- W — PROPOSED FUTURE SUB WATERLINE
- LIMITS OF CONSTRUCTION
- OHW — ORDINARY HIGH WATER
- PL — PROPERTY BOUNDARY
- BUFFER AROUND UTILITY POLES AND GUY-WIRES
- 20' WIDE SWALE
- 25' WETLAND BUFFER
- WETLAND BOUNDARY (APPROXIMATE)
- MILL RACE PATH
- PROPOSED DECIDUOUS TREE
- PROPOSED CONIFEROUS TREE
- PROPOSED SHRUBS
- PROPOSED GROUNDCOVER (CAMASSIA QUAMASH)
- PROPOSED GROUNDCOVER (DESCHAMPSIA CAESPITOSA)
- IRRIGATION MAINLINE - 2 1/2 INCH PVC, SCHEDULE 40
- IRRIGATION SLEEVE - 6 INCH
- IRRIGATION LATERAL
- M — PROPOSED IRRIGATION METER - SEE SHEET TH-3
- BFP — BACKFLOW PREVENTION DEVICE - SEE DETAIL 3/L-6
- FS — FLOW SENSOR AND MASTER VALVE - SEE DETAIL 4/L-6
- IRRIGATION CONTROLLER
- IRRIGATION CONTROLLER - BATTERY OPERATED
- DRIPLINE TREE RING - SEE DETAIL 7/L-6
- DRIP EMITTER AT SHRUB - SEE DETAIL 6/L-6
- CONTROL VALVE ASSEMBLY - - SEE DETAIL 5/L-6 GPM AND VALVE SIZE AS SHOWN ON PLAN
- DRIP ZONE CONTROL VALVE ASSEMBLY GPM AND VALVE SIZE AS SHOWN ON PLAN AS BELOW:
  - 1 — CONTROLLER AND ZONE NUMBER
  - 123 — GPM
  - 1 — VALVE SIZE

PLUGS

CO	CAREX OBNUPTA
CS	CAREX STIPATA
EP	ELEOCHARIS PALUSTRIS
GO	GLYCERIA OCCIDENTALIS
JO	JUNCUS OXYMERIS
SM	SCIRPUS MICROCARPUS

PLANTING DESIGNATIONS / SEED MIXES

- FB — POND FOREBAY
- PB — POND
- PE — POND EDGE
- SL — STORMWATER SWALE - LOWER END
- SU — STORMWATER SWALE - UPPER END
- UP — UPLANDS

EXISTING TREES

- EXISTING DEAD TREES WITH POTENTIAL HABITAT VALUE
- EXISTING TREES TO BE REMOVED DUE TO CONSTRUCTION
- EXISTING TREES TO REMAIN. PROTECT DURING CONSTRUCTION.

SCALE: 1" = 40'

40' 20' 0 40'

N

REGISTERED RICHARD M. SATRE OREGON LANDSCAPE ARCHITECT

willamalane Park and Recreation District

LANDSCAPE ARCHITECTS SCHIRMER SATRE GROSS INC

Revisions and Addendums			
Description	Date	No.	By
60% DESIGN	4/7/14	1	mas
90% DESIGN	12/5/14	2	jsb
DRAFT 100% DESIGN	5/15/15	3	jsb
100% DESIGN	6/5/15	4	jsb
FINAL 100% DESIGN	6/5/15	5	jsb

amec foster wheeler

DESIGN: jsb | DRAWN: jsb

SPRINGFIELD OREGON

THE CITY OF SPRINGFIELD
DEVELOPMENT & PUBLIC WORKS
225 FIFTH STREET
SPRINGFIELD, OREGON 97477
VOICE: 541-726-3753
FAX: 541-726-3689
WWW.SPRINGFIELD-OR.GOV

CHECK: RMS | PROJ. NO: P21052 | BID ON: 6/10/15

SPRINGFIELD MILL RACE STORMWATER FACILITY, BOOTH KELLY TRAILHEAD & MILL RACE PATH

LANDSCAPE AND IRRIGATION PLAN - CENTRAL

SHEET L-3

44 OF 47

THIS DRAWING IS FULL SIZE WHEN PLOTTED AT 22"x34".

Plotted by:MCARTHY, PATRICK on Friday, June 05, 2015 at 10:05:39 AM from the L-3 layout tab
File Name/Pathnames:\\SDC01\12300\12300\12300\DWGS_SDRC_DESIGN\STORMWATER_LANDSCAPE_01\005 (6.5.15) - FINAL\STORMWATER_LANDSCAPE_01\005 (6.5.15).DWG

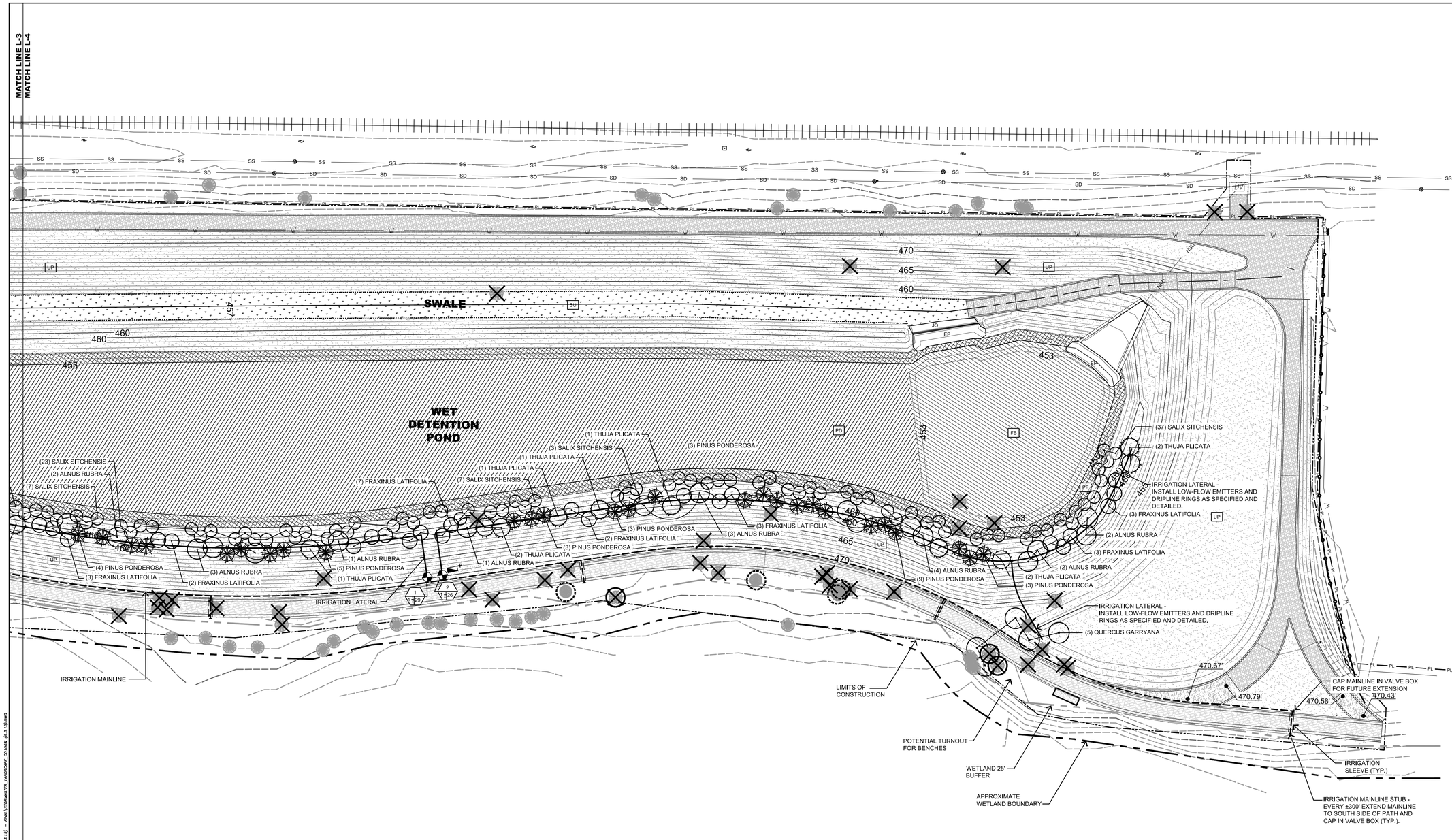

LEGEND

- STORM SEWER MANHOLE
- SANITARY SEWER MANHOLE
- AREA DRAIN
- UTILITY POLE
- GUY-WIRE ANCHOR
- RAILROAD TRACKS
- FENCE
- OHP — OVERHEAD POWER LINES
- PROPOSED ELECTRIC CONDUIT
- GUY-WIRE
- SD — STORM SEWER
- SS — SANITARY SEWER
- EXISTING MAJOR CONTOUR
- EXISTING MINOR CONTOUR
- PROPOSED MAJOR CONTOUR
- PROPOSED MINOR CONTOUR
- W — PROPOSED FUTURE SUB WATERLINE
- LIMITS OF CONSTRUCTION
- OHW — ORDINARY HIGH WATER
- PL — PROPERTY BOUNDARY
- BUFFER AROUND UTILITY POLES AND GUY-WIRES
- 20' WIDE SWALE
- 25' WETLAND BUFFER
- WETLAND BOUNDARY (APPROXIMATE)
- MILL RACE PATH
- PROPOSED DECIDUOUS TREE
- PROPOSED CONIFEROUS TREE
- PROPOSED SHRUBS
- PROPOSED GROUNDCOVER (CAMASSIA QUAMASH)
- PROPOSED GROUNDCOVER (DESCHAMPSIA CAESPITOSA)
- IRRIGATION MAINLINE - 2 1/2 INCH PVC, SCHEDULE 40
- IRRIGATION SLEEVE - 6 INCH
- IRRIGATION LATERAL
- M — PROPOSED IRRIGATION METER - SEE SHEET TH-3
- BFP — BACKFLOW PREVENTION DEVICE - SEE DETAIL 3/L-6
- FS — FLOW SENSOR AND MASTER VALVE - SEE DETAIL 4/L-6
- IRRIGATION CONTROLLER
- IRRIGATION CONTROLLER - BATTERY OPERATED
- DRIPLINE TREE RING - SEE DETAIL 7/L-6
- DRIP EMITTER AT SHRUB - SEE DETAIL 6/L-6
- CONTROL VALVE ASSEMBLY - - SEE DETAIL 5/L-6 GPM AND VALVE SIZE AS SHOWN ON PLAN
- DRIP ZONE CONTROL VALVE ASSEMBLY GPM AND VALVE SIZE AS SHOWN ON PLAN AS BELOW:
  - 1 — CONTROLLER AND ZONE NUMBER
  - 23 — GPM
  - VALVE SIZE

PLUGS

CO	CAREX OBNUPTA
CS	CAREX STIPATA
EP	ELEOCHARIS PALUSTRIS
GO	GLYCERIA OCCIDENTALIS
JO	JUNCUS OXYMERIS
SM	SCIRPUS MICROCARPUS

PLANTING DESIGNATIONS / SEED MIXES

- FB — POND FOREBAY
- PD — POND
- PE — POND EDGE
- SL — STORMWATER SWALE - LOWER END
- SU — STORMWATER SWALE - UPPER END
- UP — UPLANDS

EXISTING TREES

- EXISTING DEAD TREES WITH POTENTIAL HABITAT VALUE
- EXISTING TREES TO BE REMOVED DUE TO CONSTRUCTION
- EXISTING TREES TO REMAIN. PROTECT DURING CONSTRUCTION.

SCALE: 1" = 40'

40' 20' 0 40'

N

REGISTERED LANDSCAPE ARCHITECT
RICHARD M. SATRE
OREGON

willamalane Park and Recreation District

LANDSCAPE ARCHITECTS SCHIRMER SATRE GRUNDY INC

Revisions and Addendums			
Description	Date	No.	By
60% DESIGN	4/7/14	1	mas
90% DESIGN	12/5/14	2	jsb
DRAFT 100% DESIGN	5/15/15	3	jsb
100% DESIGN	6/5/15	4	jsb
FINAL 100% DESIGN	6/5/15	5	jsb

amec foster wheeler

SPRINGFIELD OREGON

THE CITY OF SPRINGFIELD
DEVELOPMENT & PUBLIC WORKS
225 FIFTH STREET
SPRINGFIELD, OREGON 97477
VOICE: 541-726-3753
FAX: 541-726-3689
WWW.SPRINGFIELD-OR.GOV

DESIGN: jsb | DRAWN: jsb | CHECK: RMS | PROJ. NO: P21052 | BID ON: 6/10/15

SPRINGFIELD MILL RACE STORMWATER FACILITY, FACILITY, BOOTH KELLY TRAILHEAD, AND PATH

LANDSCAPE AND IRRIGATION PLAN - EAST

THIS DRAWING IS FULL SIZE WHEN PLOTTED AT 22"x34".

Plotted by/CASATIV, PATRICK on Friday, June 05, 2015 at 10:58:40 AM from the L-4 layout tab
File: Home/Projects/12200112200/12290/12290.11/dwg/L_0408_DESIGN/STORMWATER/LANDSCAPE_01/0208 (6.3.15).DWG

NOTES:
1. BOLLARDS WILL BE SELECTED ON SITE WITH ASSISTANCE OF LANDSCAPE ARCHITECT.
2. ABOVE GRADE HEIGHT OF BOULDER SHALL BE 28"-32".
3. WIDTH OF BOLLARD SHALL BE LESS THAN ABOVE GRADE HEIGHT.
4. PLACE BASALT BOLLARDS AND BOULDER SO THAT 25%-35% OF HEIGHT IS BELOW FINISH GRADE.

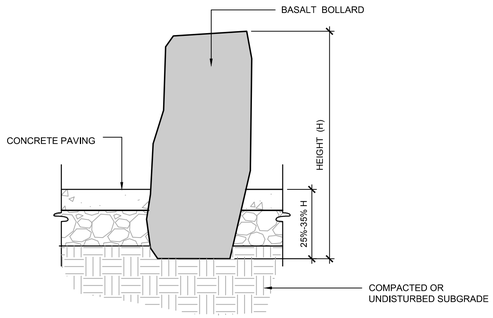

1 BASALT BOLLARD AT PLAZA
N.T.S.

NOTES:
1. BOULDERS WILL BE SELECTED ON SITE WITH ASSISTANCE OF LANDSCAPE ARCHITECT.
2. PLACE BASALT BOLLARDS AND BOULDER SO THAT 25%-35% OF HEIGHT IS BELOW FINISH GRADE.

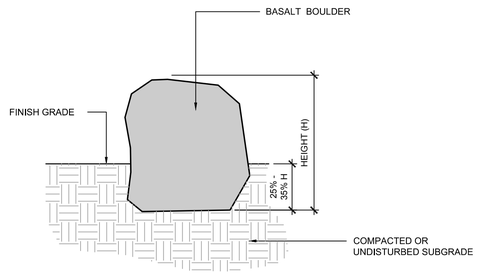

2 BASALT BOULDERS
N.T.S.

NOTES:
1. PROVIDE A MINIMUM OF 6 INCHES OF TOPSOIL IN ALL AREAS TO RECEIVE TREES, SHRUBS, OR SEEDING, EXCEPT FOR POND FOREBAY AND POND BOTTOM.
2. MULCH IS IN ADDITION TO TOPSOIL.

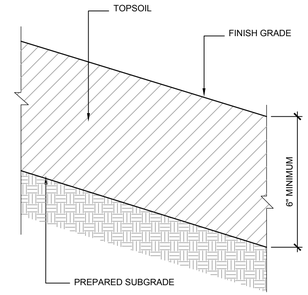

3 TOPSOIL PLACEMENT
N.T.S.

NOTES:
1. COMPOST MULCH TO BE APPLIED ON ALL DISTURBED AREAS AFTER PLANTING OF TREES, SHRUBS AND PLUGS.

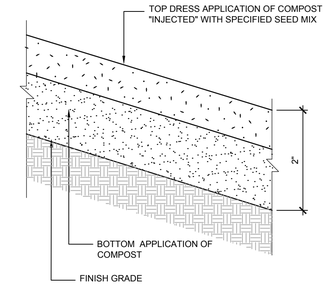

4 TACKIFIED SEED MULCH APPLICATION
N.T.S.

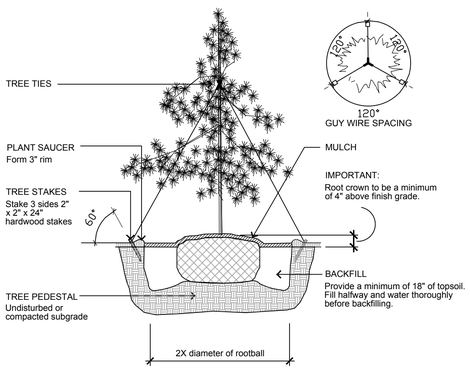

NOTE:
REMOVE TREE TIES AT ONE YEAR WARRANTY.

5 CONIFEROUS TREE PLANTING
N.T.S.

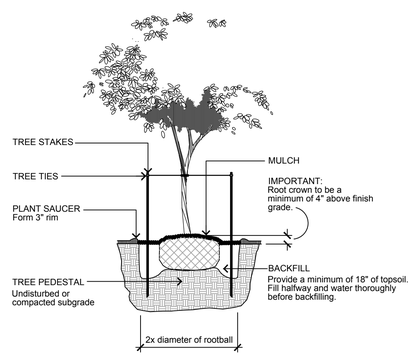

NOTE:
REMOVE TREE TIES AT ONE YEAR WARRANTY.

6 DECIDUOUS TREE PLANTING
N.T.S.

NOTE:
1. SHRUBS PLANTED TOO DEEPLY WILL NOT BE ACCEPTED.

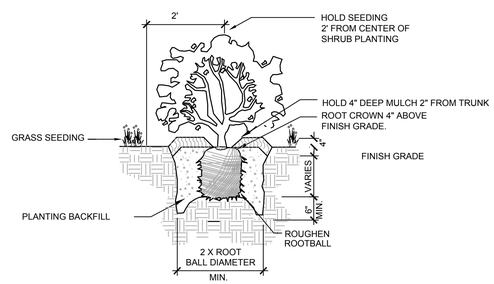

7 SHRUB PLANTING
N.T.S.

REGISTERED LANDSCAPE ARCHITECT
RICHARD M. SATRE
OREGON
2014

willamalane Park and Recreation District

LANDSCAPE ARCHITECTS
SCHIRMER SATRE GROSS INC

Revisions and Addendums			
Description	Date	No.	By
60% DESIGN	4/7/14	1	mas
90% DESIGN	12/5/14	2	jsb
DRAFT 100% DESIGN	5/15/15	3	jsb
100% DESIGN	6/5/15	4	jsb
FINAL 100% DESIGN	6/5/15	5	jsb

amec foster wheeler

SPRINGFIELD OREGON

THE CITY OF SPRINGFIELD
DEVELOPMENT & PUBLIC WORKS
225 FIFTH STREET
SPRINGFIELD, OREGON 97477
VOICE: 541-726-3753
FAX: 541-726-3689
WWW.SPRINGFIELD-OR.GOV

DESIGN: jsb | DRAWN: jsb | CHECK: RMS | PROJ. NO: P21052 | BID ON: 6/10/15

SPRINGFIELD MILL RACE STORMWATER FACILITY, BOOTH KELLY TRAILHEAD & MILL RACE PATH
LANDSCAPE DETAILS

SHEET L-5

THIS DRAWING IS FULL SIZE WHEN PLOTTED AT 22"x34".

Plotted by/CARTHY, PATRICK on Friday, June 05, 2015 at 10:08:42 AM from the 1=5 layout tab
File: Home/Projects\12000\12700\12750\Dwg\L-1000_DESIGN\STORMWATER_LANDSCAPE_03100B (6.5.15) - FINAL\STORMWATER_LANDSCAPE_03100B (6.5.15).DWG

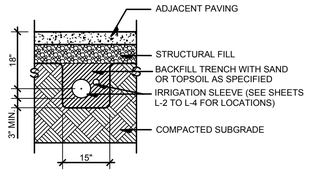

NOTE: - EXTEND SLEEVES 4" BEYOND PAVEMENT EDGES.
- INSTALL 1X2 RED-TOP, WOOD, LOCATION STAKES @ FACE OF WALK OR CURB @ BOTH ENDS OF ALL IRRIGATION SLEEVES. HOLD DOWN 1" BELOW TOP OF CURB OR WALK
- INSTALL (1) 6" SCHEDULE 40 P.V.C. AND (1) 2" SCHEDULE 40 P.V.C. SLEEVE AT EACH LOCATION.

1 IRRIGATION SLEEVING

SECTION SCALE: 1/2" = 1'=0"

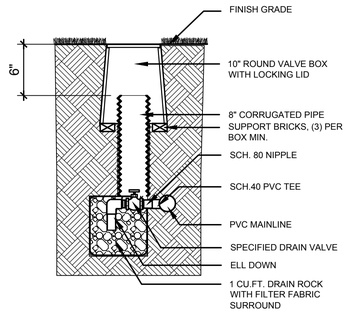

2 MANUAL MAIN LINE DRAIN VALVE

SECTION SCALE" 1" = 1'-0"

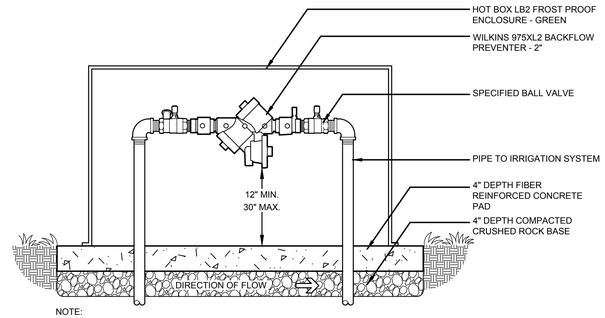

NOTE:
1. CONTRACTOR TO VERIFY INSTALLATION SPACE FOR BOTH BACKFLOW DEVICES IN ENCLOSURE PRIOR TO ORDERING.
2. ANCHOR ENCLOSURE TO PAD AS SPECIFIED BY MANUFACTURER.
3. PROVIDE LOCKING MECHANISM FOR CABINET.

3 REDUCED PRESSURE BACKFLOW PREVENTER IN INSULATED ENCLOSURE

SCALE" 1" = 1'-0"

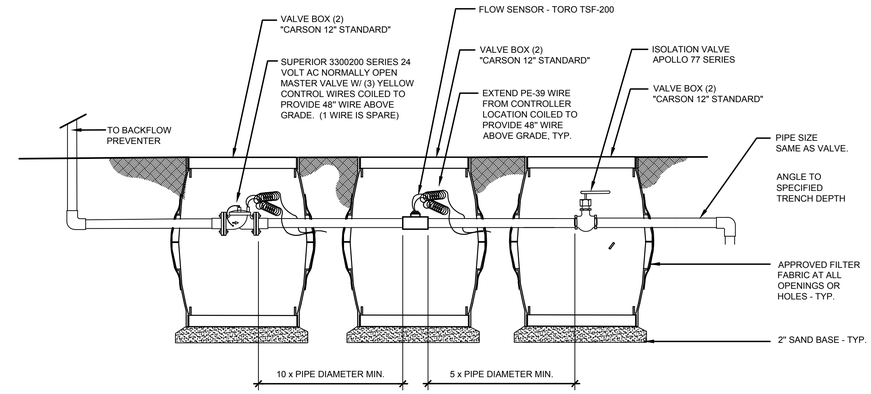

NOTE: CONTRACTOR TO COMPACT BACKFILL IN LIFTS. SATURATE SOIL AROUND VALVE BOX ASSEMBLIES, RE-COMPACT AND PROVIDE ADDITIONAL MATERIAL AS NECESSARY TO PREVENT SETTLING OF BOX ASSEMBLIES UNDER MOWER WEIGHT.

4 IRRIGATION SUPPLY AREA EQUIPMENT INSTALLATION DETAIL

SECTION SCALE" 1" = 1'-0"

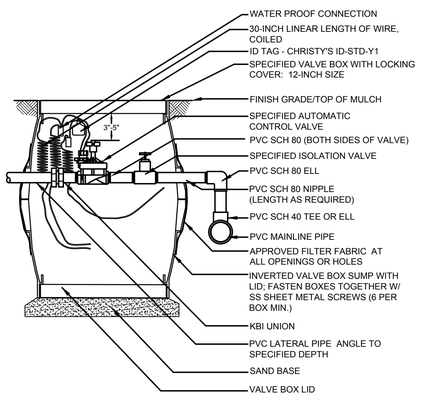

NOTE: CONTRACTOR TO COMPACT BACKFILL IN LIFTS. SATURATE SOIL AROUND VALVE BOX ASSEMBLY, RE-COMPACT AND PROVIDE ADDITIONAL MATERIAL AS NECESSARY TO PREVENT SETTLING OF BOX ASSEMBLY UNDER MOWER WEIGHT.

5 AUTOMATIC CONTROL VALVE

SCALE" 1" = 1'-0"

NOTES:
1. PROVIDE (2) 7 GPH PRESSURE COMPENSATING EMITTERS AT EACH SALIX SITCHENSIS.
2. PROVIDE (2) 5 GPH PRESSURE COMPENSATING EMITTERS AT EACH SYMPHORICARPOS ALBUS SHOWN WATERED WITH DRIP IRRIGATION.
3. SPACE EMITTERS EQUALLY AROUND PLANT OVER ROOTBALL.

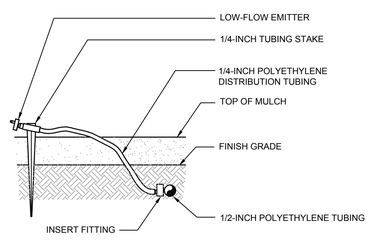

6 LOW-FLOW SHRUB EMITTER

N.T.S.

NOTES:
1. INSTALL 3' DIA. DRIPLINE LOOP AND 4' DIA. DRIPLINE LOOP AT EACH TREE.
2. DRIPLINE TO HAVE 0.9 GPH PRESSURE COMPENSATING EMITTERS AT 12" O.C..

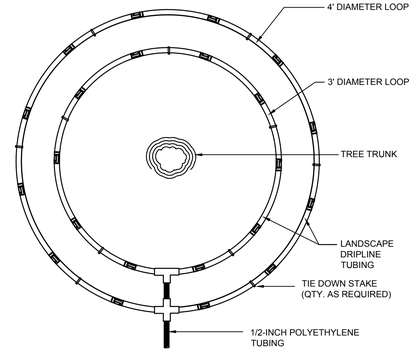

7 DRIPLINE LOOP AROUND TREE

N.T.S.

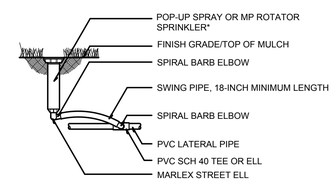

*USE SPECIFIED PRESSURE REGULATING BODIES

8 FLUSH MOUNTED POP-UP SPRAY OR MP ROTATOR NOZZLE SPRINKLER

SCALE: 1" = 1'-0"

REGISTERED RICHARD M. SATRE OREGON LANDSCAPE ARCHITECT

willamalane Park and Recreation District

LANDSCAPE ARCHITECTS SCHIRMER SATRE INC

Revisions and Addendums			
Description	Date	No.	By
60% DESIGN	4/7/14	1	mas
90% DESIGN	12/5/14	2	jsb
DRAFT 100% DESIGN	5/15/15	3	jsb
100% DESIGN	6/5/15	4	jsb
FINAL 100% DESIGN	6/5/15	5	jsb

amec foster wheeler

DESIGN: jsb DRAWN: jsb CHECK: RMS PROJ. NO: P21052 BID ON: 6/10/15

SPRINGFIELD OREGON

THE CITY OF SPRINGFIELD
DEVELOPMENT & PUBLIC WORKS
225 FIFTH STREET
SPRINGFIELD, OREGON 97477
VOICE: 541-726-3753
FAX: 541-726-3689
WWW.SPRINGFIELD-OR.GOV

SPRINGFIELD MILL RACE STORMWATER FACILITY, BOOTH KELLY TRAILHEAD & MILL RACE PATH

IRRIGATION DETAILS

SHEET L-6

THIS DRAWING IS FULL SIZE WHEN PLOTTED AT 22"x34".

Plotted by/CARTHY, PATRICK on Friday, June 05, 2015 at 10:59:15 AM from the L-6 layout tab
File Name/Pathnames \\2000\12260\12260\DWG_SDEC-DESIGN\STORMWATER_LANDSCAPE_CD100B (6.5.15) - FINAL\STORMWATER_LANDSCAPE_CD100B (6.5.15).DWG